Made in Since 1983 Sweden

OUR PRODUCTS

IBC control

IBC control manufactures and stocks a complete program for controlling rotary heat exchangers. Keeping our promises and delivering on time is very important to us. We know from experience, this is appreciated by our customers.

MiniMax, MicroMax, VariMax CE, VariMax NG and MicroStart

THE COMPLETE PRODUCT FAMILY FOR AN OPTIMAL RUN OF ROTARY HEAT EXCHANGERS

Our control units have all the necessary functions for an optimal run of rotary heat exchangers. Additionable cards for docking such as difference temperature regulator with electric heat output, 2-rotor module card are available as accessories to MiniMax.

MiniMax is intended for rotor diameters up to 3500 mm and manages all input signals existing on the market. All our additional cards suit the MiniMax, which makes it our most cost efficient control unit.

MicroMax is intended for rotor diameters up to 1500 mm. Input signal of 0-10 V.

MicroMax180 is intended for rotor diameters up to 2500 mm. Input signal of 0-10 V.

MicroMax370 is intended for rotor diameters up to 3500 mm. Input signal of 0-10 V.

MicroMax750 is intended for rotor diameters up to 5000 mm. Input signal of 0-10 V.

MicroMax1500 is intended for rotor diameters up to 8000 mm. Input signal of 0-10 V.

VariMax25 CE is a stepper motor control intended for rotor diameters up to 1500 mm. Input signal of 0-10 V. The control unit must be combined with our VariMax-motor25 CE.

VariMax50 CE is a stepper motor control intended for rotor diameters up to 2500 mm. Input signal of 0-10 V. The control unit must be combined with our VariMax-motor50 CE.

VariMax100 CE is a stepper motor control intended for rotor diameters up to 3900 mm. Input signal of 0-10 V. The control unit must be combined with our VariMax-motor100 CE.

VariMax25 NG is a stepper motor control intended for rotor diameters up to 1500 mm. Input signal of 0-10 V. The control unit must be combined with our VariMax-motor25 NG.

VariMax50 NG is a stepper motor control intended for rotor diameters up to 2500 mm. Input signal of 0-10 V. The control unit must be combined with our VariMax-motor50 NG.

MicroStart is a “hybrid control unit” between the simple on/off control unit and the more advanced stepless control unit for rotary heat exchangers. MicroStart is intended for rotor diameters up to 1500 mm. MicroStart has a pause/running time function controlled by the input signal, with a total cycle time of 60 seconds. Depending on the level of the input signal, the proportion between pause and running time changes. MicroStart has a built-in shift of the input signal, which implies that the rotor becomes proportional to the input signal. The control units are delivered in enclosed versions as standard, but may on demand be delivered in customer specific versions.

CE

All control units are CE-marked and is therefor also approved in accordance with the demands as specified in the EMC directive and the Low voltage directive.

Contents

DRIVE SETS	4-5
CONTROL UNITS	6-25
MOTORS 1-PHASE	26-33
MOTORS 3-PHASE	34-43
SPARE PART MOTORS 3-PHASE	44-45
STEPPER MOTOR	46-49
ACCESSORIES	50-54
PERSONAL NOTES	55

The complete drive set

Assemblers with asynchronous motors use IE1 motors. They may only be used as replacement assemblies according to the Ecodesign Directive EU 2019/1781.

Covers all size of rotary heat exchangers

- Suits all rotary heat exchangers
- Safe operation, well tested system
- Cleaning function / Rotation monitor
- 3-phase motors, adjusted for speed regulation
- Five-year product warranty VariMax CE and NG
- Two-year product warranty other assortment

Set of EMC-glands as an option on MicroMac and MiniMax

Complete with control unit, rotation monitor, motor and suited bush pulley.

All our control units are available as components in the drive set.

For further data see the product facts of each control unit and motor.

IBC control

ORDER KEY

At order, please state real rotor diameter as below.

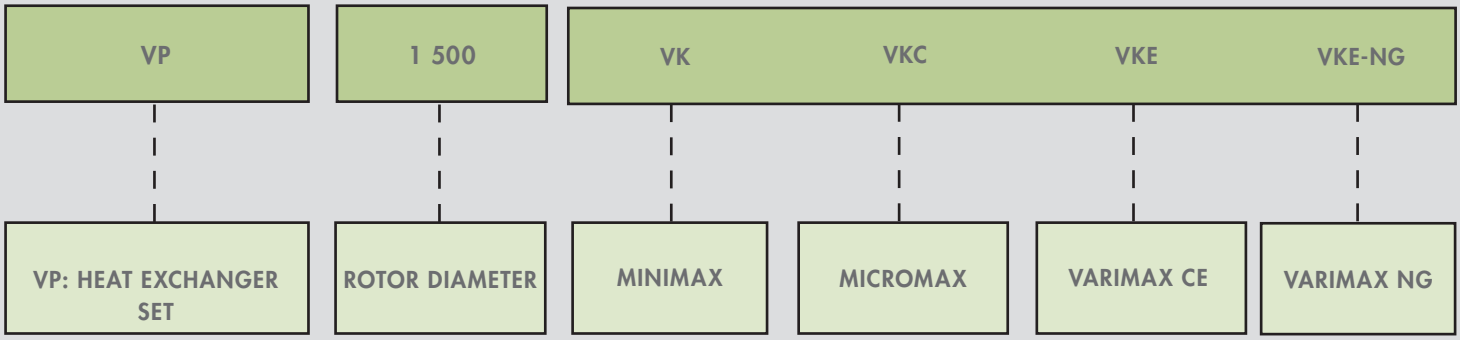

The control unit, rotation monitor, motor and bush pulley will be combined regarding to the information given.*)

*) The VariMax NG has an internal rotation monitor.

Following accessories can also be delivered to drive set at inquiry:

EMC-set

Round belt

V-belt

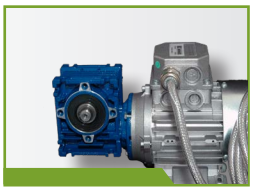
Connected motor

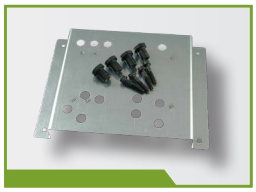
Motor shelf, fixed

Motor shelf, spring-mounted

For further data see the product facts of each control unit, motor and accessories.

F21037601 MiniMax

- User friendly
- Stable aluminium enclosure
- Compact build dimensions
- All existing input signals
- Additional cards
- Remaining alarms
- CE-approved
- Two-year product warranty

Set of EMC-glands as an option

MiniMax is the optimal control unit for all rotary heat exchangers. The popularity of the control unit has MiniMax won on its universal character, combining small dimensions with great capacity and flexibility.

MiniMax controls motors for rotor diameters up to 3500 mm with a rotor speed of max. 12 rpm. If the rotor requires a faster rotor speed, the rotor diameter should be reduced.

The control unit can handle all input signals currently used in the market. Having the MiniMax delivered as an included component in any of our popular drive set is a very cost efficient alternative.

IBC control

CONNECTION DIAGRAM

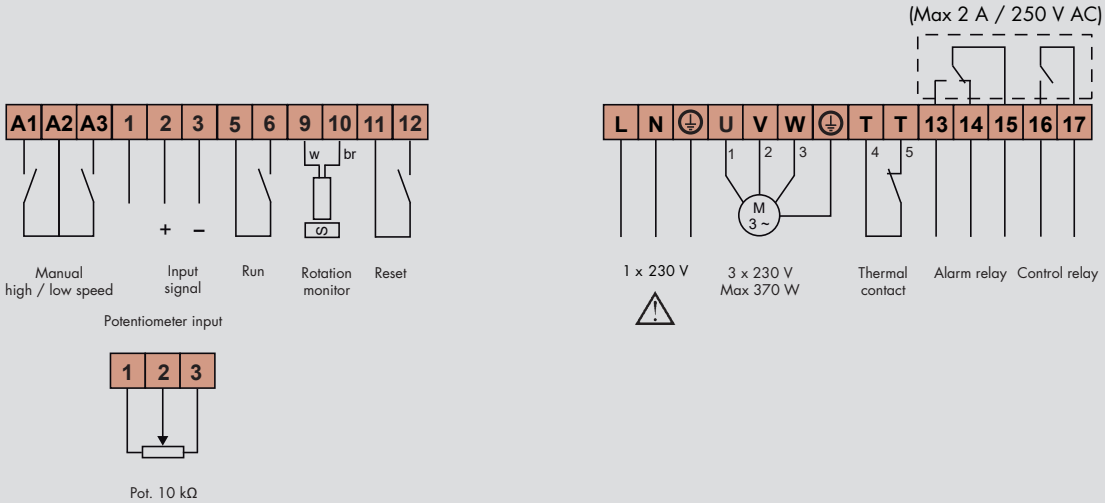

Description of functions

The product series MiniMax is a modern control unit with specific additional functions for an optimal run of a rotary heat exchanger.

All existing input signals	The speed of the heat exchanger and with that its efficiency is regulated by the control unit so that the speed of the rotor is in proportion to the input signal from the central control. If the input signal is below the set up threshold value, the rotor will stop.
Boost	Torque boost at low rpm.
Threshold value	Value, adjustable between 0-2 V.
Cleaning function	When the rotor has been stopped for 30 minutes, the cleaning function is activated and the rotor rotates for 10 seconds at minimum speed.
Rotation monitor	The rotation monitor stops the control unit and alarms if the rotor stops rotating. The control unit trips if it does not receive pulses every 5 minutes.
Alarm	The control unit trips and alarms at over- or under voltage, short circuit or earth faulty as well as tripped thermal contact in the motor. All alarms are remaining.
Manual high / low speed	Possibility of externally controlling the minimum- and maximum speed, regardless of the value of the input signal.
Test	DIP-switches for manual run on low- or high speed.
Additional cards	MiniMax has several additional cards for complement.

Technical data

	MiniMax
Connection voltage	1x230-240 V, +/-15% 50-60 Hz
Power input, max.	650 W
Input current, max.	2,8 A
External fuse, max.	10 A
Output voltage*)	3x0-230 V
Min. frequency	5-20 Hz
Max. frequency	40-100 Hz
Motor output, max.	370 W
Motor current, max.	1,9 A

Overload 2 min/30 min	3,5 A
Internal fuse**)	4 AT
Acceleration time	0-30 sec
Retardation time	0-30 sec
Ambient temp. non condensing	-25 - +45 °C
Protection form	IP 54
Weight	1,2 kg
Dimensions, HxWxD	198x165x60 mm

*) Exact value cannot be obtained with a digital measuring instrument
**) The fuse protects both motor and electronics

Other data

Also available in 208 V-version

F21009301 MicroMax

F21018301 MicroMax180

- User friendly
- Stable aluminium enclosure
- Compact build dimensions
- Input signal 0-10 V
- Remaining alarms
- CE-approved
- Two-year product warranty

Set of EMC-glands as an option

MicroMax, a series of control units for rotary heat exchangers. The control units combine small dimensions with large capacity and are very easily mounted and run.

MicroMax is intended for rotor diameters up to 1500 mm and MicroMax180 for up to 2500 mm with a rotor speed of max. 12 rpm. If the rotor requires a faster rotor speed, the rotor diameter should be reduced.

All control units in the MicroMax-series are available as included components in any of our popular drive set.

IBC control

CONNECTION DIAGRAM

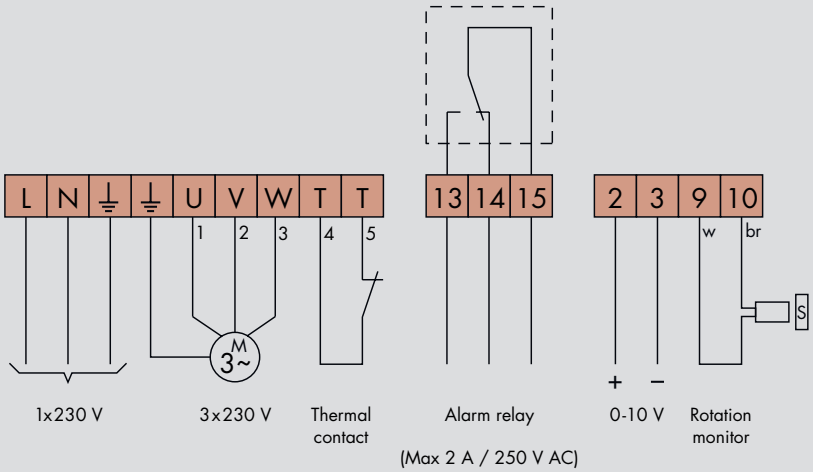

Description of functions

MicroMax is a series of modern control units with specific additional functions for an optimal run of a rotary heat exchanger.

Input signal 0-10 V — The speed of the heat exchanger and its efficiency is regulated steplessy by the control unit so that the speed of the rotor is in proportion to the input signal from the central control. If the input signal is below the set up threshold value, the rotor will stop.

Boost — Torque boost at low rpm.

Threshold value — Value, adjustable between 0-2 V.

Cleaning function — When the rotor has stopped for 30 minutes, the cleaning function is activated and the rotor rotates at minimum rpm for 10 seconds.

Rotation monitor — The rotation monitor stops the control unit and alarms if the rotor stops rotating. The control unit trips if it does not receive pulses every 5 minutes.

Alarm — The control unit trips and alarms at over- or under voltage, short circuit or earth faulty as well as tripped thermal contact in the motor. All alarms are remaining.

Test — DIP-switches for manual run on low- or high speed.

Technical data

	MicroMax	MicroMax180
Connection voltage	1x230-240 V, +/-15% 50-60 Hz	1x230-240 V, +/-15% 50-60 Hz
Power input, max.	210 W	390 W
Input current, max.	0,9 A	1,7 A
External fuse, max.	10 A	10 A
Output voltage*)	3x0-230 V	3x0-230 V
Output frequency	5-100 Hz	5-100 Hz
Min. frequency	(Fixed) 5 Hz	(Fixed) 5 Hz
Max. frequency	40-100 Hz	40-100 Hz
Motor output, max.	90 W	180 W
Motor current, max.	0,7 A	1,3 A
Overload 2 min/30 min	1,3 A	2,1 A
Internal fuse**)	2 AT	2,5 AT
Acceleration time	(Fixed) 30 sec	(Fixed) 30 sec
Retardation time	(Fixed) 30 sec	(Fixed) 30 sec
Ambient temp. non condensing	-25 - +45 °C	-25 - +45 °C
Protection form	IP54	IP54
Weight	0,9 kg	0,9 kg
Dimensions, HxWxD	158x165x60 mm	158x165x60 mm

*) Exact value cannot be obtained with a digital measuring instrument
**) The fuse protects both motor and electronics

F21037301 MicroMax370

F21075301 MicroMax750

- User friendly
- Stable aluminium enclosure
- Compact build dimensions
- Input signal 0-10 V
- Remaining alarms
- CE-approved
- Two-year product warranty

Set of EMC-glands as an option

MicroMax, a series of control units for rotary heat exchangers. The control units combine small dimensions with large capacity and are very easily mounted and run.

MicroMax370 is intended for rotor diameters up to 3500 mm and MicroMax750 for up to 5000 mm with a rotor speed of max. 12 rpm. If the rotor requires a faster rotor speed, the rotor diameter should be reduced.

All control units in the MicroMax-series are available as included components in any of our popular drive set.

IBC control

CONNECTION DIAGRAM

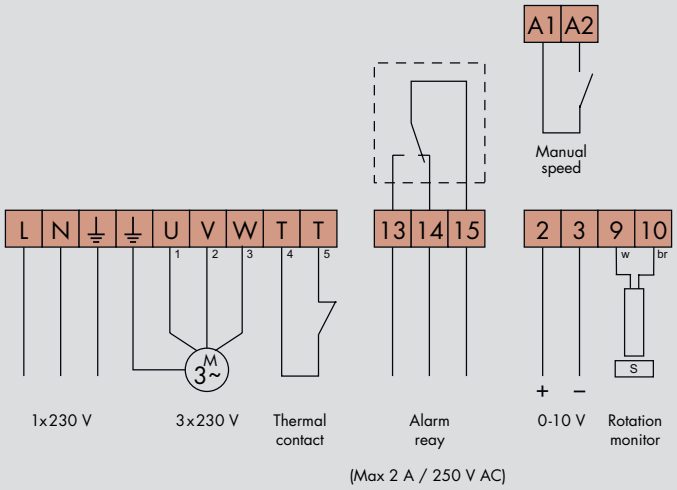

Description of functions

MicroMax is a series of modern control units with specific additional functions for an optimal run of a rotary heat exchanger.

Input signal 0-10 V The speed of the heat exchanger and its efficiency is regulated stepless by the control unit so that the speed of the rotor is in proportion to the input signal from the central control. If the input signal is below the set up threshold value, the rotor will stop.

Boost Torque boost at low rpm.

Threshold value Value, adjustable between 0-2 V.

Cleaning function When the rotor has stopped for 30 minutes, the cleaning function is activated and the rotor rotates at minimum rpm for 10 seconds.

Rotation monitor The rotation monitor stops the control unit and alarms if the rotor stops rotating.
The control unit trips if it does not receive pulses every 5 minutes.

Alarm The control unit trips and alarms at over- or under voltage, short circuit or earth faulty as well as tripped thermal contact in the motor. All alarms are remaining.

Manual speed Possibility of externally controlling the maximum speed.

Test DIP-switches for manual run on low- or high speed.

Technical data

	MicroMax370	MicroMax750
Connection voltage	1x230-240 V, +/-15% 50-60 Hz	1x230-240 V, +/-15% 50-60 Hz
Power input, max.	650 W	1100 W
Input current, max.	2,8 A	5 A
External fuse, max.	10 A	10 A
Output voltage*)	3x0-230 V	3x0-230 V
Output frequency	5-100 Hz	5-100 Hz
Min. frequency	(Fixed) 5 Hz	(Fixed) 5 Hz
Max. frequency	40-100 Hz	40-100 Hz
Motor output, max.	370 W	750 W
Motor current max.	1,9 A	3,6 A
Overload 2 min/30 min	3,5 A	5,3 A
Internal fuse**)	4 AT	6,3 AT
Acceleration time	(Fixed) 30 sec	(Fixed) 30 sec
Retardation time	(Fixed) 30 sec	(Fixed) 60 sec
Ambient temperature non condensing	-25 - +45 °C	-25 - +45 °C
Protection form	IP54	IP54
Weight	1,1 kg	1,2 kg
Dimensions, HxWxD	198x165x60 mm	223x165x60 mm

*) Exact value cannot be obtained with a digital measuring instrument
**) The fuse protects both motor and electronics

F21150301 MicroMax1500

- User friendly
- Stable aluminium enclosure
- Compact build dimensions
- Input signal 0-10 V
- Remaining alarms
- CE-approved
- Two-year product warranty

Set of EMC-glands as an option

MicroMax, a series of control units for rotary heat exchangers. The control units combine small dimensions with large capacity and are very easily mounted and run.

MicroMax1500 is intended for rotor diameters up to 8000 mm with a rotor speed of max. 12 rpm. If the rotor requires a faster rotor speed, the rotor diameter should be reduced.

All control units in the MicroMax-series are available as included components in any of our popular drive set.

IBC control

CONNECTION DIAGRAM

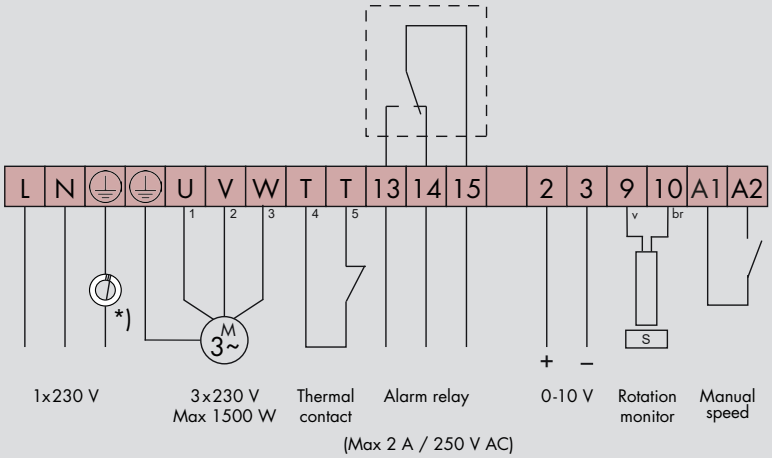

Description of functions

MicroMax is a series of modern control units with specific additional functions for an optimal run of a rotary heat exchanger.

Input signal 0-10 V The speed of the heat exchanger and its efficiency is regulated stepless by the control unit so that the speed of the rotor is in proportion to the input signal from the central control. If the input signal is below the set up threshold value, the rotor will stop.

Boost Torque boost at low rpm.

Threshold value Value, adjustable between 0-2 V.

Cleaning function When the rotor has stopped for 30 minutes, the cleaning function is activated and the rotor rotates at minimum rpm for 10 seconds.

Rotation monitor The rotation monitor stops the control unit and alarms if the rotor stops rotating.
The control unit trips if it does not receive pulses every 5 minutes.

Alarm The control unit trips and alarms at over- or under voltage, short circuit or earth faulty as well as tripped thermal contact in the motor. All alarms are remaining.

Manual speed Possibility of externally controlling the maximum speed.

Test DIP-switches for manual run on low- or high speed.

Technical data

	MicroMax1500
Connection voltage	1x230-240 V, +/-10% 50-60 Hz
Power input, max.	1900 W
Input current, max.	9,5 A
External fuse, max.	16 A
Output voltage*)	3x0-230 V
Output frequency	5-100 Hz
Min. frequency	(Fixed) 5 Hz
Max. frequency	40-100 Hz
Motor output, max.	1500 W
Motor current max.	6,2 A
Internal fuse**)	15 AT
Acceleration time	(Fixed) 30 sec
Retardation time	(Fixed) 60 sec
Ambient temperature non condensing	-25 - +45 °C
Protection form	IP54
Weight	2,9 kg
Dimensions, HxWxD	233x205x104 mm

*) Exact value cannot be obtained with a digital measuring instrument
**) The fuse protects both motor and electronics

F21025501 VariMax25 CE

Control unit for stepper motor

Also available in Modbus version

- User friendly
- Stable aluminium enclosure
- Compact build dimensions
- Input signal 0-10 V
- Remaining alarms
- CE-approved
- Five-year product warranty

Set of EMC-glands are included in VariMax25 CE

VariMax25 CE is a control unit and combines small dimensions with large capacity and is very easily mounted and run.

VariMax25 CE is intended for thermal rotor diameters up to 1500 mm with a rotor speed of max. 12 rpm. If the rotor requires a faster rotor speed, the rotor diameter should be reduced.

VariMax25 CE is an alternative to our control units MiniMax and MicroMax.

The control unit should be combined with our VariMax-motor25 CE.

IBC control

CONNECTION DIAGRAM

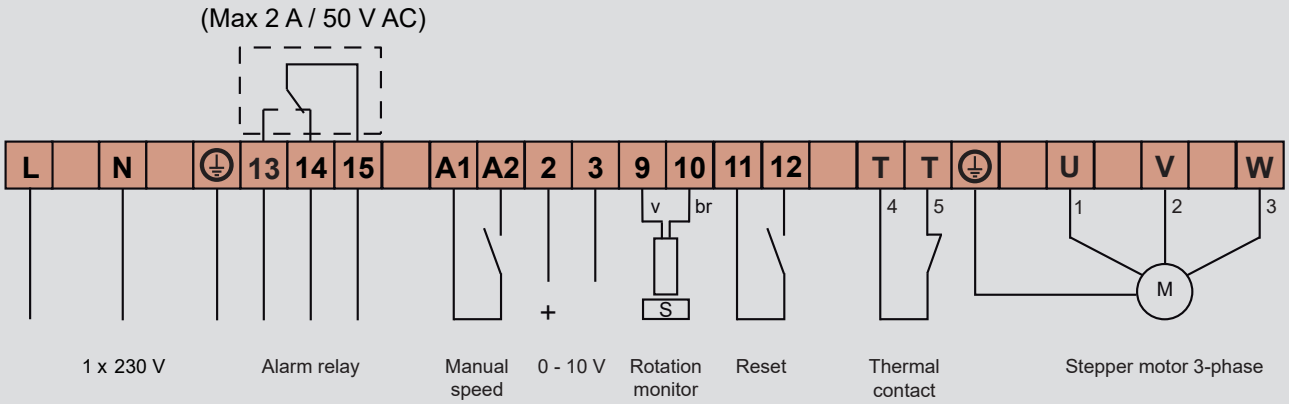

Description of functions

Together with the VariMax-motor25 CE, VariMax25 CE constitutes a modern combination of specific additional functions for an optimal run of a rotary heat exchanger. The VariMax-motor25 CE is a stepper motor with a large torque within the complete speed area. This means that the speed of a thermal rotor is between 0,1-12 rpm.

Input signal 0-10 V — The speed of the rotor is regulated by the control unit so that the efficiency of the heat exchanger is in proportion to the input signal from the central control.

Cleaning function — When the rotor has stopped for 10 minutes, the cleaning function is activated and the rotor starts to rotate. As a warning, the rotor first rotates for 6 seconds at a motor speed of 5 rpm, the rotor is then stationary for 3 seconds. After this, the actual cleaning starts, for a random time, between 10 to 20 seconds with the motor at 20 rpm.

Rotation monitor — Alarms and trips if pulse is not received every 30 minutes at minimum speed and every 20 seconds at maximum speed. The time between theese speed is linear.
The function is disconnectable through DIP-switches. The alarm is remaining.

Other alarms — The control unit trips and alarms at over- or under voltage, overtemperature in the control unit, overtemperature in the motor, short circuit or earth faulty. All alarms are remaining.

Manual speed — Possibility of controlling the speed via separate potentiometer, whatever the value of the input signal.

Test — DIP-switches for manual run at low- or high speed.

Technical data

	VariMax25 CE
Connection voltage	1x230-240 V +/-15% 50/60 Hz
Power input max.	110 W
Input current	0,9 A
External fuse max.	10 A
Output voltage*)	3x0-280 V
Output current, max	0,7 A
Internal fuse**)	2,5 AT

Output frequency	0-290 Hz
Acceleration- and retardation time	30 sec
Ambient temperature	-30 - +45 °C
not condensing	-40 - +45 °C***)
Protection form	Type 1
Weight	1,1 kg
Dimensions, HxWxD	173x187x70 mm

*) Exact value can not be achieved with a digital measuring instrument
**) The fuse protects both motor and electronics
***) Note, at -40 °C, the control unit must be connected to power all the time

F21050501 VariMax50 CE

Control unit for stepper motor

Also available in Modbus version

- User friendly
- Stable aluminium enclosure
- Compact build dimensions
- Input signal 0-10 V
- Remaining alarms
- CE-approved
- Five-year product warranty

Set of EMC-glands are included in VariMax50 CE

VariMax50 CE is a control unit and combines small dimensions with large capacity and is very easily mounted and run.

VariMax50 CE is intended for thermal rotor diameters up to 2500 mm with a rotor speed of max. 12 rpm. If the rotor requires a faster rotor speed, the rotor diameter should be reduced.

VariMax50 CE is an alternative to our control units MiniMax and MicroMax.

The control unit should be combined with our VariMax-motor50 CE.

IBC control

CONNECTION DIAGRAM

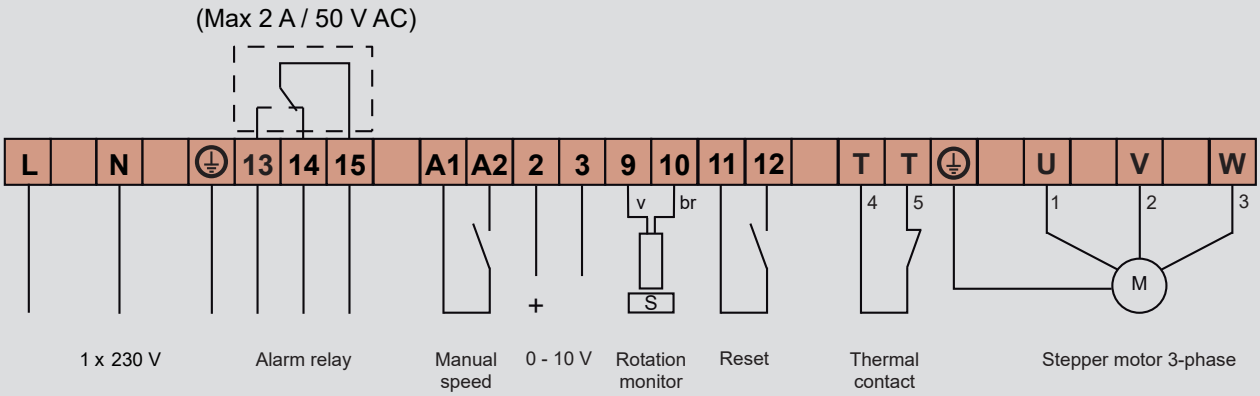

Description of functions

Together with the VariMax-motor50 CE, VariMax50 CE constitutes a modern combination of specific additional functions for an optimal run of a rotary heat exchanger. The VariMax-motor50 CE is a stepper motor with a large torque within the complete speed area. This means that the speed of a thermal rotor is between 0,1-12 rpm.

Input signal 0-10 V — The speed of the rotor is regulated by the control unit so that the efficiency of the heat exchanger is in proportion to the input signal from the central control.

Cleaning function — When the rotor has stopped for 10 minutes, the cleaning function is activated and the rotor starts to rotate. As a warning, the rotor first rotates for 6 seconds at a motor speed of 5 rpm, the rotor is then stationary for 3 seconds. After this, the actual cleaning starts, for a random time, between 10 to 20 seconds with the motor at 20 rpm.

Rotation monitor — Alarms and trips if pulse is not received every 30 minutes at minimum speed and every 20 seconds at maximum speed. The time between theese speed is linear. The function is disconnectable through DIP-switches. The alarm is remaining.

Other alarms — The control unit trips and alarms at over- or under voltage, overtemperature in the control unit, overtemperature in the motor, short circuit or earth faulty. All alarms are remaining.

Manual speed — Possibility of controlling the speed via separate potentiometer, whatever the value of the input signal.

Test — DIP-switches for manual run at low- or high speed.

Technical data

	VariMax50 CE
Connection voltage	1x230-240 V +/-15% 50/60 Hz
Power input max.	240 W
Input current	1,9 A
External fuse max.	10 A
Output voltage*)	3x0-280 V
Output current, max	2,0 A
Internal fuse**)	2,5 AT

Output frequency	0-312 Hz
Acceleration- and retardation time	30 sec
Ambient temperature	-30 - +45 °C
not condensing	-40 - +45 °C***)
Protection form	Type 1
Weight	1,2 kg
Dimensions, HxWxD	203x187x70 mm

*) Exact value can not be achieved with a digital measuring instrument
**) The fuse protects both motor and electronics
***) Note, at -40 °C, the control unit must be connected to power all the time

F21100501 VariMax100 CE

Control unit for stepper motor

Also available in Modbus version

- User friendly
- Stable aluminium enclosure
- Compact build dimensions
- Input signal 0-10 V
- Remaining alarms
- CE-approved
- Five-year product warranty

Set of EMC-glands are included in VariMax100 CE

VariMax100 CE is a control unit and combines small dimensions with large capacity and is very easily mounted and run.

VariMax100 CE is intended for thermal rotor diameters up to 3900 mm with a rotor speed of max. 12 rpm. If the rotor requires a faster rotor speed, the rotor diameter should be reduced.

VariMax100 CE is an alternative to our control units MiniMax and MicroMax.

The control unit should be combined with our VariMax-motor100 CE.

IBC control

CONNECTION DIAGRAM

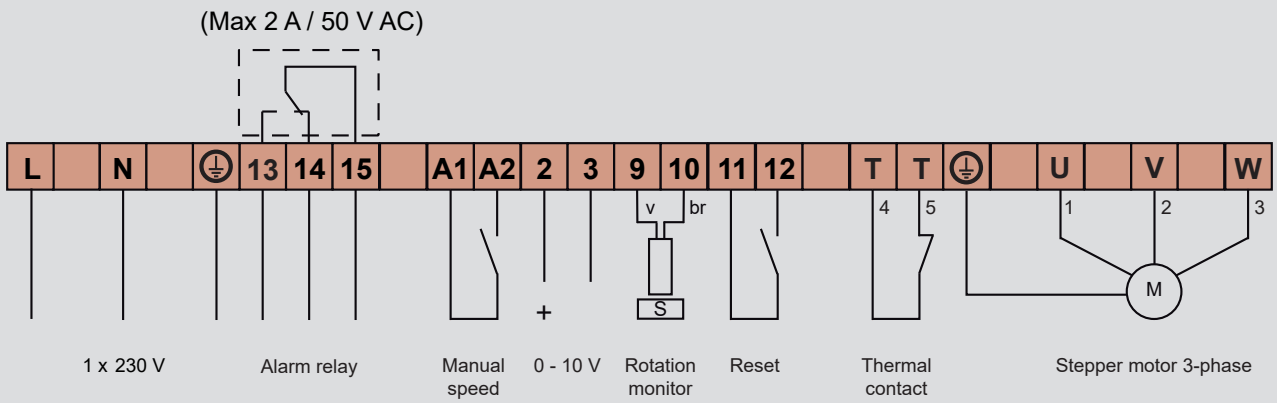

Description of functions

Together with the VariMax-motor100 CE, VariMax100 CE constitutes a modern combination of specific additional functions for an optimal run of a rotary heat exchanger. The VariMax-motor100 CE is a stepper motor with a large torque within the complete speed area. This means that the speed of a thermal rotor is between 0,1-12 rpm.

Input signal 0-10 V — The speed of the rotor is regulated by the control unit so that the efficiency of the heat exchanger is in proportion to the input signal from the central control.

Cleaning function — When the rotor has stopped for 10 minutes, the cleaning function is activated and the rotor starts to rotate. As a warning, the rotor first rotates for 6 seconds at a motor speed of 5 rpm, the rotor is then stationary for 3 seconds. After this, the actual cleaning starts, for a random time, between 10 to 20 seconds with the motor at 20 rpm.

Rotation monitor — Alarms and trips if pulse is not received every 30 minutes at minimum speed and every 20 seconds at maximum speed. The time between theese speed is linear.
The function is disconnectable through DIP-switches. The alarm is remaining.

Other alarms — The control unit trips and alarms at over- or under voltage, overtemperature in the control unit, overtemperature in the motor, short circuit or earth faulty. All alarms are remaining.

Manual speed — Possibility of controlling the speed via separate potentiometer, whatever the value of the input signal.

Test — DIP-switches for manual run at low- or high speed.

Technical data

	VariMax100 CE
Connection voltage	1x230-240 V +/-15% 50/60 Hz
Power input max.	500 W
Input current	2,2 A
External fuse max.	10 A
Output voltage*)	3x0-280 V
Output current, max	3,2 A
Internal fuse**)	4 AT

Output frequency	0-333 Hz
Acceleration- and retardation time	30 sec
Ambient temperature	-30 - +45 °C
not condensing	-40 - +45 °C***)
Protection form	Type 1
Weight	2,6 kg
Dimensions, HxWxD	233x205x104 mm

*) Exact value can not be achieved with a digital measuring instrument
**) The fuse protects both motor and electronics
***) Note, at -40 °C, the control unit must be connected to power all the time

F21025305 VariMax25 NG

Control unit for stepper motor

Set of EMC-glands are included in VariMax25 NG

- Internal rotation monitor
- Integrated Modbus
- User friendly
- Stable aluminium enclosure
- Compact build dimensions
- Input signal 0-10 V
- Remaining alarms
- CE-approved
- Five-year product warranty

VariMax25 NG is our latest control unit and combines small dimensions with large capacity and is very easily mounted and run.

VariMax25 NG is intended for thermal rotor diameters up to 1500 mm with a rotor speed of max. 12 rpm. If the rotor requires a faster rotor speed, the rotor diameter should be reduced.

VariMax25 NG is an alternative to our control units MiniMax and MicroMax.

The control unit should be combined with our VariMax-motor25 NG.

IBC control

CONNECTION DIAGRAM

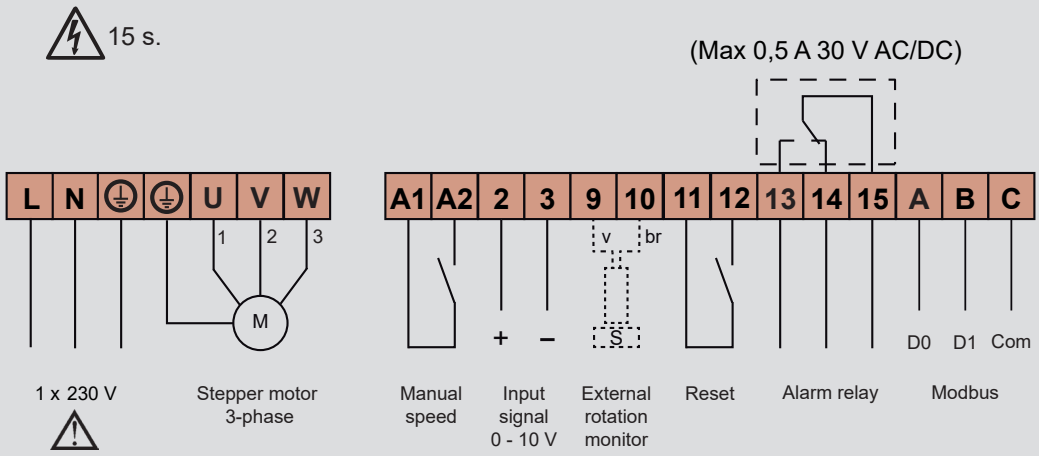

Description of functions

Together with the VariMax-motor25 NG, VariMax25 NG constitutes a modern combination of specific additional functions for an optimal run of a rotary heat exchanger. The VariMax-motor25 NG is a stepper motor with a large torque within the complete speed area. This means that the speed of a thermal rotor is between 0,1-12 rpm.

Input signal 0-10 V — The speed of the rotor is regulated by the control unit so that the efficiency of the heat exchanger is in proportion to the input signal from the central control.

Cleaning function — When the rotor has stopped for 10 minutes, the cleaning function is activated and the rotor starts to rotate. As a warning, the rotor first rotates for 6 seconds at a motor speed of 5 rpm, the rotor is then stationary for 3 seconds. After this, the actual cleaning starts, for a random time, between 10 to 20 seconds with the motor at 20 rpm.

Rotation monitor — The internal rotation monitor is normally used, but an external rotation monitor can also be connected. For detailed information see the manual.

Other alarms — The control unit trips and alarms at over- or under voltage, overtemperature in the control unit, overtemperature in the motor, short circuit or earth faulty. All alarms are remaining.

Manual speed — Possibility of controlling the speed via separate potentiometer, whatever the value of the input signal.

Test — DIP-switches for manual run at low- or high speed.

Modbus — The VariMax25 NG has internal Modbus functions.
For more information, see the manual on our website, www.ibccontrol.se

Technical data

	VariMax25 NG
Connection voltage	1x230-240 V +/-15% 50/60 Hz
Power input max.	97 W
Input current	0,8 A
External fuse max.	10 A
Output voltage*)	3x0-260 V
Output current, max	0,7 A

Output frequency	0-291 Hz
Acceleration- and retardation time	30 sec
Ambient temperature not condensing	-40 - +45 °C
Protection form	IP 44
Weight	0,6 kg
Dimensions, HxWxD	132x195x56 mm

*) Exact value can not be achieved with a digital measuring instrument

F21050305 VariMax50 NG

Control unit for stepper motor

Set of EMC-glands are included in VariMax50 NG

- Internal rotation monitor
- Integrated Modbus
- User friendly
- Stable aluminium enclosure
- Compact build dimensions
- Input signal 0-10 V
- Remaining alarms
- CE-approved
- Five-year product warranty

VariMax50 NG combines small dimensions with large capacity and is very easily mounted and run.

VariMax50 NG is intended for thermal rotor diameters up to 2500 mm with a rotor speed of max. 12 rpm. If the rotor requires a faster rotor speed, the rotor diameter should be reduced.

VariMax50 NG is an alternative to our control units MiniMax and MicroMax.

The control unit is delivered in enclosed version and should be combined with our VariMax-motor50 NG.

IBC control

CONNECTION DIAGRAM

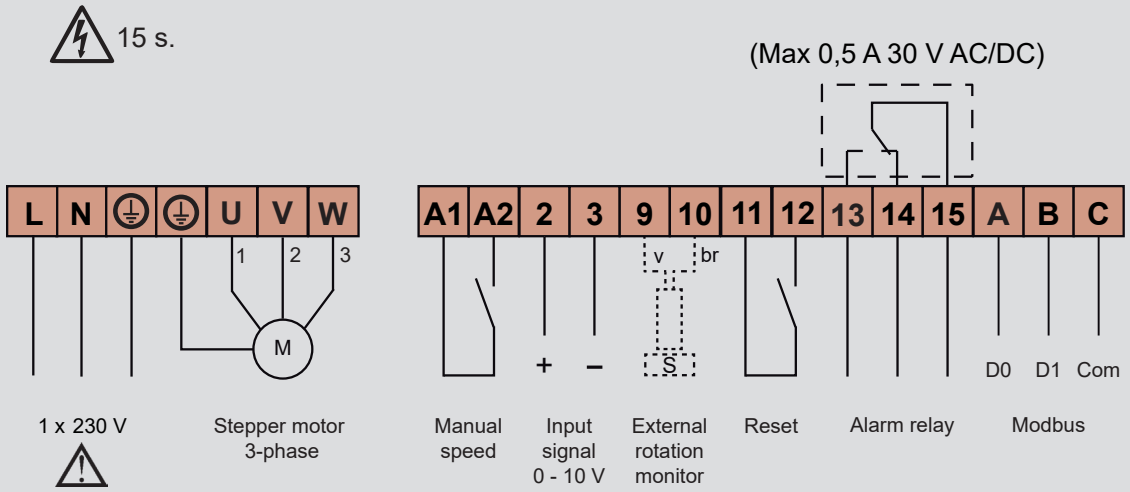

Description of functions

Together with the VariMax-motor50 NG, VariMax50 NG constitutes a modern combination of specific additional functions for an optimal run of a rotary heat exchanger. The VariMax-motor50 NG is a stepper motor with a large torque within the complete speed area. This means that the speed of a thermal rotor is between 0,1-12 rpm.

Input signal 0-10 V — The speed of the rotor is regulated by the control unit so that the efficiency of the heat exchanger is in proportion to the input signal from the central control.

Cleaning function — When the rotor has stopped for 10 minutes, the cleaning function is activated and the rotor starts to rotate. As a warning, the rotor first rotates for 6 seconds at a motor speed of 5 rpm, the rotor is then stationary for 3 seconds. After this, the actual cleaning starts, for a random time, between 10 to 20 seconds with the motor at 20 rpm.

Rotation monitor — The internal rotation monitor is normally used, but an external rotation monitor can also be connected. For detailed information see the manual.

Other alarms — The control unit trips and alarms at over- or under voltage, overtemperature in the control unit, overtemperature in the motor, short circuit or earth faulty. All alarms are remaining.

Manual speed — Possibility of controlling the speed via separate potentiometer, whatever the value of the input signal.

Test — DIP-switches for manual run at low- or high speed.

Modbus — The VariMax50 NG has internal Modbus functions.
For more information, see the manual on our website, www.ibccontrol.se

Technical data

	VariMax50 NG
Connection voltage	1x230-240 V +/-15% 50/60 Hz
Power input max.	222 W
Input current	1,65 A
External fuse max.	10 A
Output voltage*)	3x0-260 V
Output current, max	2,0 A

Output frequency	0-312 Hz
Acceleration- and retardation time	30 sec
Ambient temperature not condensing	-40 - +45 °C
Protection form	IP 44
Weight	0,8 kg
Dimensions, HxWxD	162x195x56 mm

*) Exact value can not be achieved with a digital measuring instrument

F21008201 MicroStart

- User friendly
- Stable aluminium enclosure
- Compact building dimensions
- Input signal 0-10 V
- Remaining alarms
- CE-approved
- Two-year product warranty

Set of EMC-glands as an option

MicroStart is a hybrid control unit between the simple on/off-control unit and the more advanced stepless control unit for rotary heat exchangers.

The control unit combines small dimensions with large capacity and is very easily mounted and run.

MicroStart is intended for rotors up to diameter 1500 mm.

MicroStart is available as an included component in any of our popular drive set.

IBC control

CONNECTION DIAGRAM

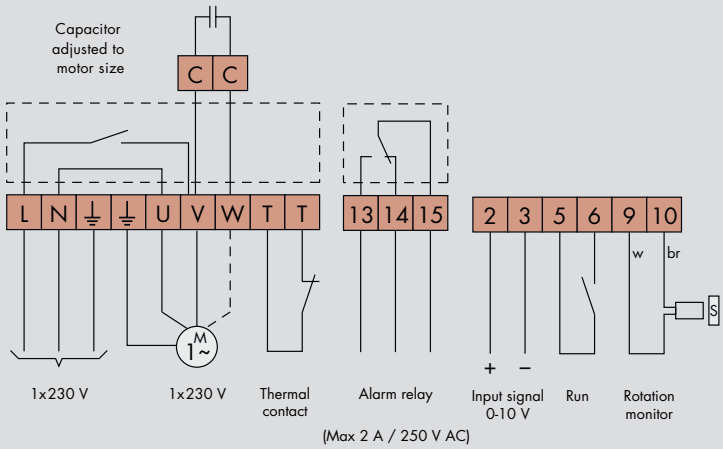

Description of functions

MicroStart, enclosed IP54, is a control unit intended for single phase motors. The motor capacitor can be mounted in the control unit. MicroStart has a built-in soft start-/soft stop function to spare motor and gear. It also has the additional functions required for easily running a rotary heat exchanger.

Input signal 0-10 V MicroStart has a pause/running time function controlled by the input signal, with a total cycle time of 60 seconds. Depending on the level of the input signal, the proportion between pause and running time changes. If the input signal is below the threshold value 0,5 V, the rotor stops. MicroStart has a built-in shift of the input signal, which implies that the efficiency of the rotor becomes proportional to the input signal.

Cleaning function MicroStart has a build-in cleaning function. When the rotor has been still for 45 minutes, the cleaning function is activated and the rotor rotates for 10 seconds.

Rotation monitor MicroStart has a built-in rotation monitor. A magnetic sensor is connected to the control unit with a built-in hall element and a magnet with it. The control unit trips if a pulse is not received every 5 minutes.

Alarm The control unit trips at tripped thermal contact in the motor.

Test DIP-switches for manual run.

Technical data

	MicroStart
Motor output max.	90 W
Motor current max.	1 A
Connection voltage	1x230 V, +/-10% 50Hz
Output voltage	1x230 V
Internal fuse*)	1 AT
External fuse max.	10 A
Ambient temp. non condensing	-25 - +45 °C
Protection form	IP54
Weight	0,6 kg
Dimensions, HxWxD	110x164x60mm

*) The fuse protects both motor and electronics

In line helical gear motor 1x230 V, 50 Hz

F22006055	6/55
F22006080	6/80

- Adapted for on/off run alternatively by MicroStart
- Built-in thermal contact, not drawn to terminal
- Compact built-in dimensions
- Two-year product warranty

IBC control

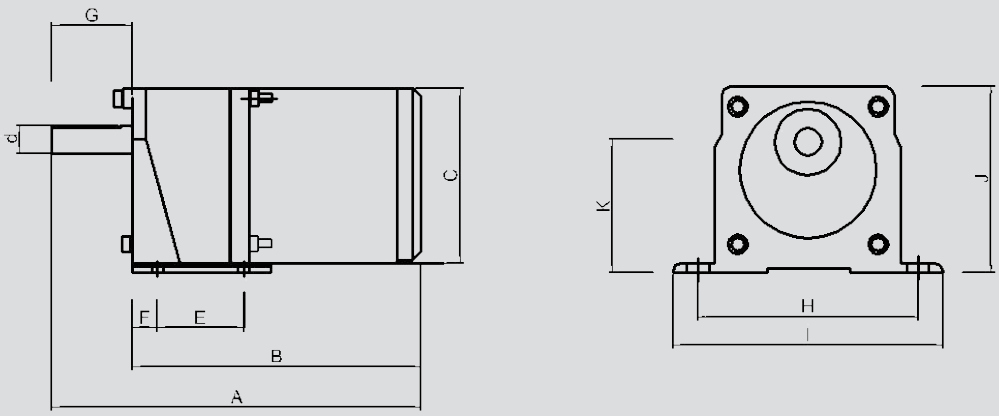

MOTOR	A	B	C	d	E	F	G	H	I	J	K
6/55	135	110	60	8	25	15	28	83	100	67,5	48
6/80	135	110	60	8	25	15	28	83	100	67,5	48

Technical data at 50 Hz

Motor	6/55	6/80
Rated output	6 W	6 W
Rated current at 230V	0,08 A	0,08 A
Rated speed	55 rpm	80 rpm
Gear ratio	1:25	1:15
Rated torque	0,8 Nm	0,5 Nm
Protection form	IP23	IP23
Connection voltage	1x230 V	1x230 V
Weight	1,0 kg	1,0 kg
Motor capacitor	0,6 uF	0,6 uF

Max rotor diameter at rotor speed 12 rpm

Motor	6/55	6/80
Rotor diameter	450 mm	450 mm

In line helical gear motor 1x230 V, 50 Hz

F22025096	25/96
F22040100	40/100

- Adapted for on/off run alternatively by MicroStart
- Built-in thermal contact, not drawn to terminal
- Compact built-in dimensions
- Two-year product warranty

IBC control

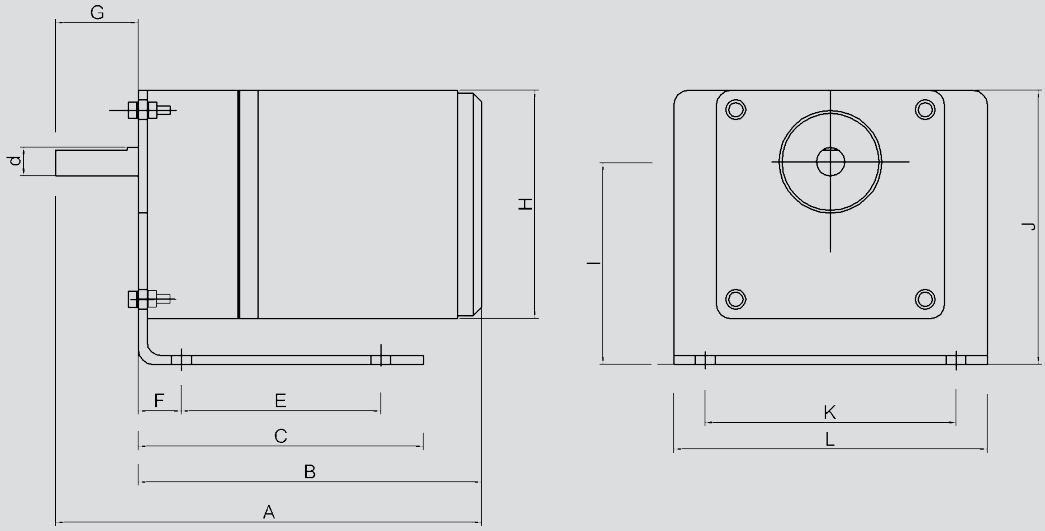

MOTOR	A	B	C	d	E	F	G	H	I	J	K	L
25/96	150	120	100	10	60	15	30	80	70	96	88	110
40/100	180	150	100	12	60	15	30	87	80	112	88	110

Technical data at 50 Hz

Motor	25/96	40/100
Rated output	25 W	40 W
Rated current at 230 V	0,23 A	0,39 A
Rated speed	96 rpm	100 rpm
Gear ratio	1:12,5	1:12,5
Rated torque	2,0 Nm	2,8 Nm
Protection form	IP23	IP23
Connection voltage	1x230 V	1x230 V
Weight including motor bracket	2,5 kg	3,6 kg
Motor capacitor	1,3 uF	2,0 uF

Max rotor diameter at rotor speed 12 rpm

Motor	25/96	40/100
Rotor diameter	800 mm	1050 mm

In line helical gear motors with tachometer feedback 1x230 V, 50 Hz

F22025100 25/100

F22040101 40/100

- Adapted for voltage regulation
- Built-in thermal contact, not drawn to terminal
- Compact built-in dimensions
- Two-year product warranty

IBC control

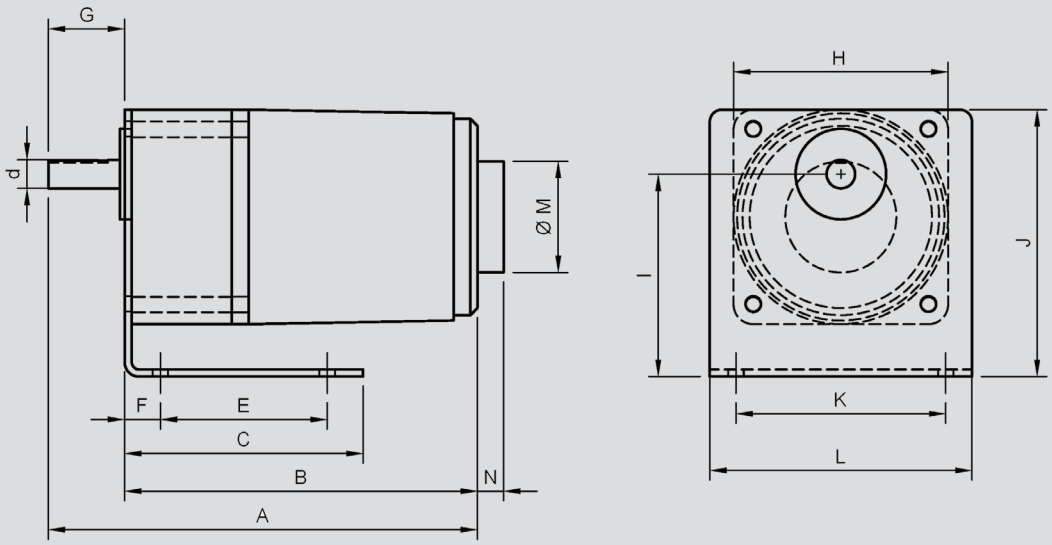

MOTOR	A	B	C	d	E	F	G	H	I	J	K	L	M	N
25/100	150	120	100	10	80	15	32	80	70	96	88	110	47	11
40/100	180	150	100	12	80	15	32	90	85	110	88	110	47	11

Technical data at 50 Hz

Motor	25/100	40/100
Rated output	25 W	40 W
Rated current	0,3 A	0,49 A
Rated speed	100 rpm	100 rpm
Gear ratio	1:12,5	1:12,5
Rated torque	1,7 Nm	4 Nm
Protection form	IP20	IP20
Connection voltage	1x230 V	1x230 V
Weight incl. motor bracket	2,5 kg	3,7 kg
Motor capacitor	1,2 uF	2,0 uF

Max rotor diameter at rotor speed 12 rpm

Motor	25/100	40/100
Rotor diameter	800 mm	1050 mm

Other data

Tachometer feedback is 0-24 V DC.

Worm gear motor 1x230 V, 50 Hz

F22090090	90/90
F22090141	90/140
F22180141*)	180/140

*) At run, using the MicroStart, a contactor must be used

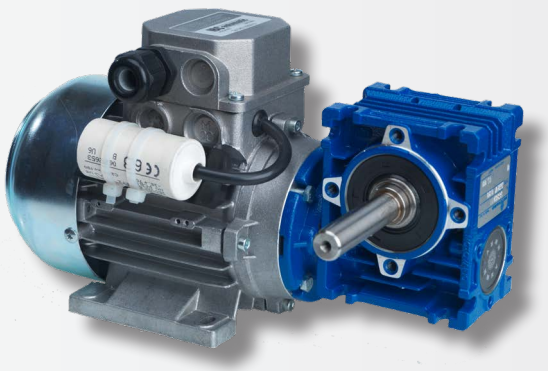

- Adapted for on/off run alternatively by MicroStart
- Aluminium coating for better thermal dissipation
- Built-in thermal contact, drawn to terminal
- Compact built-in dimensions according to IEC-standards
- Extended output shaft
- Two-year product warranty

IBC control

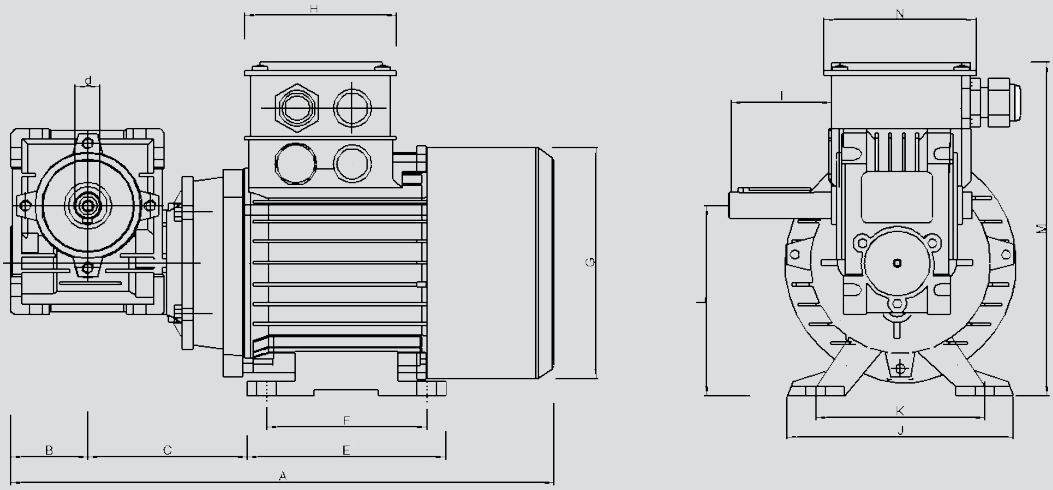

MOTOR	A	B	C	d	E	F	G	H	I	J	K	L	M
90/90	262	40	90	14	91	71	110	75	61	108	91	86	150
90/140	262	40	90	14	91	71	110	75	61	108	91	86	150
180/140	286	40	103	14	105	81	122	75	61	120	100	93	163

Technical data at 50 Hz

Motor	90/90	90/140	180/140
Rated output	90 W	90 W	180 W
Rated current 230/400V	0,9 A	0,9 A	1,6 A
Rated speed	91 rpm	140 rpm	140 rpm
Gear ratio	1:15	1:10	1:10
Rated torque	5,8 Nm	4,1 Nm	8,2 Nm
Protection form	IP55	IP55	IP55
Connection voltage	1x230 V	1x230 V	1x230 V
Weight	4,3 kg	4,3 kg	5,2 kg
Motor capasitor	6,3 uF	6,3 uF	10,0 uF

Max rotor diameter at rotor speed 12 rpm

Motor	90/90	90/140	180/140
Rotor diameter	1500 mm	1500 mm	2500 mm

In line helical gear motor 3x230 V, 50 Hz

F22025075	25/75
F22040075	40/75
F22040075F	40/75F
F22060075	60/75

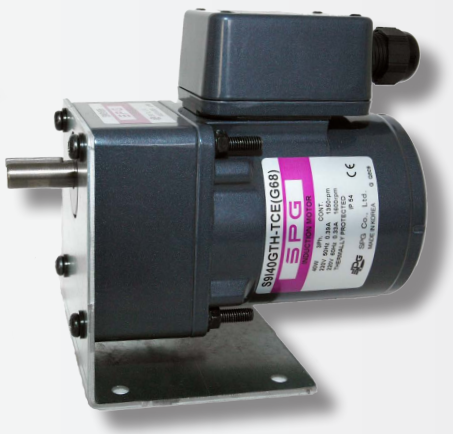

- Adapted for variable speed control
- Built-in thermal contact, drawn to terminal
- Compact built-in dimensions
- 40/75F has reinforced gearbox
- Motor length of 40/75F is critical for rotors having a width of 200 mm
- Two-year product warranty

IBC control

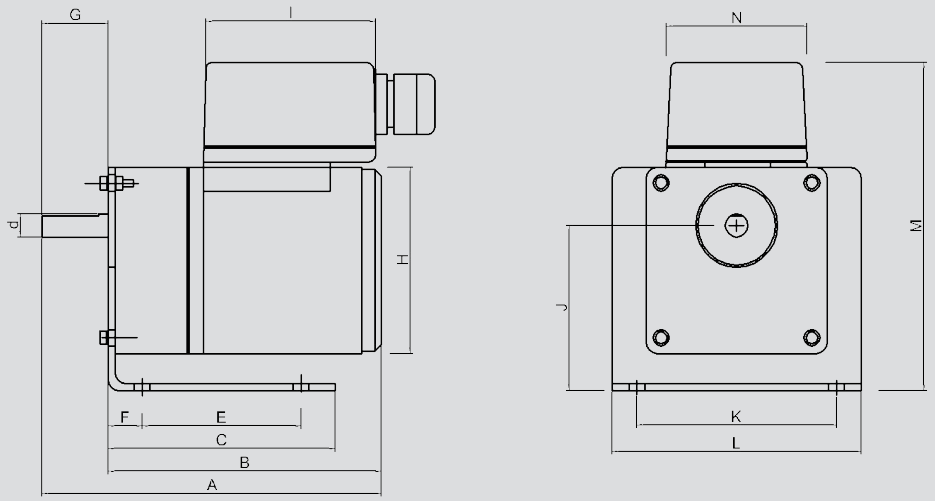

MOTOR	A	B	C	d	E	F	G	H	I	J	K	L	M	N
25/75	150	120	100	10	70	15	30	80	76	70	88	110	145	62
40/75	180	150	100	12	70	15	30	87	76	85	88	110	160	62
40/75F	215	185	100	15	70	15	30	87	76	85	88	110	160	62
60/75	230	200	100	15	70	15	30	87	76	85	88	110	160	62

Technical data at 50 Hz

Motor	25/75	40/75	40/75F	60/75
Rated output	25 W	40 W	40 W	60 W
Rated current	0,28 A	0,39 A	0,39 A	0,8 A
Rated speed	75 rpm	75 rpm	75 rpm	75 rpm
Gear ratio	1:18	1:18	1:18	1:18
Rated torque	2,5 Nm	4,1 Nm	3,7 Nm	5,5 Nm
Protection form	IP54	IP54	IP54	IP54
Connection voltage	3x230 V	3x230 V	3x230 V	3x230 V
Weight incl. motor bracket	2,7 kg	3,9 kg	4,5 kg	4,6 kg

Max rotor diameter at rotor speed 12 rmp

Motor	25/75	40/75	40/75F	60/75
Rotor diameter	800 mm	1400 mm	1400 mm	1800 mm

Worm gear motor IE1 3x230/400 V, 50 Hz

F22090068	90/68
F22090091	90/91
F22090140	90/140
F22090200	90/200

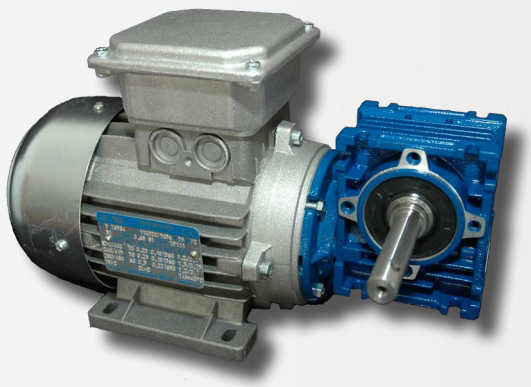

- Adapted for variable speed control
- Aluminium coating for better thermal dissipation
- Built-in thermal contact, drawn to terminal
- Compact built-in dimensions according to IEC-standards
- Extended output shaft
- Two-year product warranty

IBC control

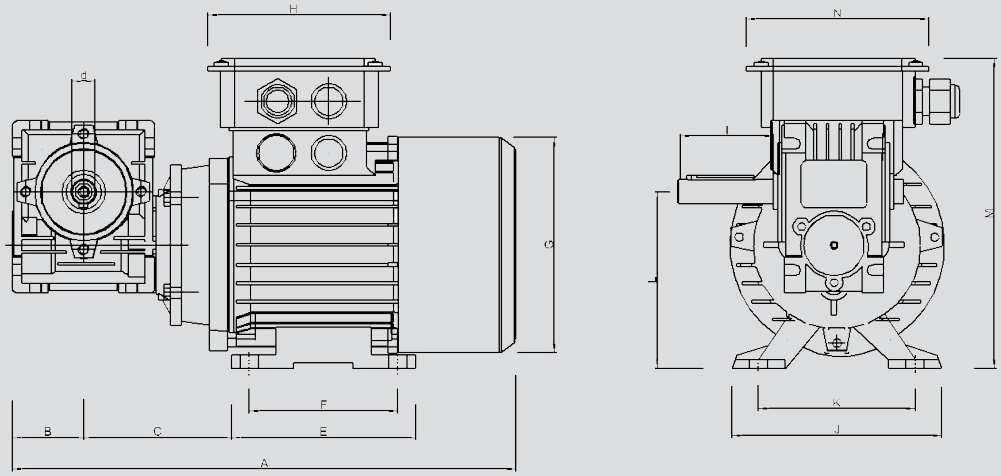

MOTOR	A	B	C	d	E	F	G	H	I	J	K	L	M	N
90/68	265	40	80	14	90	71	110	101	61	108	90	86	153	101
90/91	265	40	80	14	90	71	110	101	61	108	90	86	153	101
90/140	265	40	80	14	90	71	110	101	61	108	90	86	153	101
90/200	265	40	80	14	90	71	110	101	61	108	90	86	153	101

Technical data at 50 Hz

VVX-motor	90/68	90/91	90/140	90/200
Efficiency class	IE1	IE1	IE1	IE1
Poles	4	4	4	4
Rated output	90 W	90 W	90 W	90 W
Rated current 230/400 V	0,7/0,4 A	0,7/0,4 A	0,7/0,4 A	0,7/0,4 A
Connection voltage	3x230/400 V	3x230/400 V	3x230/400 V	3x230/400 V
Rated speed output gear	68 rpm	92 rpm	140 rpm	200 rpm
Ambient temperature	-15 - +40 °C	-15 - +40 °C	-15 - +40 °C	-15 - +40 °C
Maximum operating temperature	<+40 °C	<+40 °C	<+40 °C	<+40 °C
Rated torque output gear	7,2 Nm	5,7 Nm	4,1 Nm	3,0 Nm
Gear ratio	1:20	1:15	1:10	1:7
Protection form	IP55	IP55	IP55	IP55
Weight	3,9 kg	3,9 kg	3,9 kg	3,9 kg

Max rotor diameter at rotor speed 12 rpm

Motor	90/68	90/91	90/140	90/200
Rotor diameter	1500 mm	1500 mm	1500 mm	1500 mm

Other data

When run with our control units, the motor must be D-connected (3 x 230 V).

Worm gear motor IE2 3x230/400 V, 50 Hz

F22180073	180/72
F22180143	180/140
F22180210	180/200

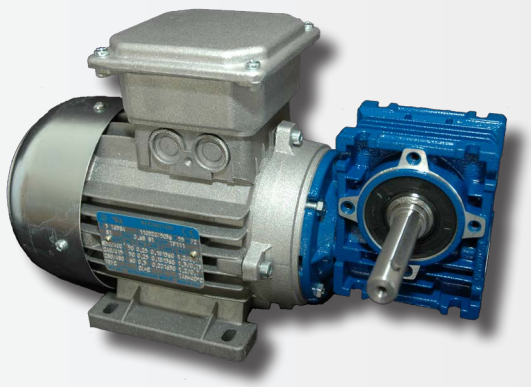

- Adapted for variable speed control
- Aluminium coating for better thermal dissipation
- Built-in thermal contact, drawn to terminal
- Compact built-in dimensions according to IEC-standards
- Extended output shaft
- Two-year product warranty

IBC control

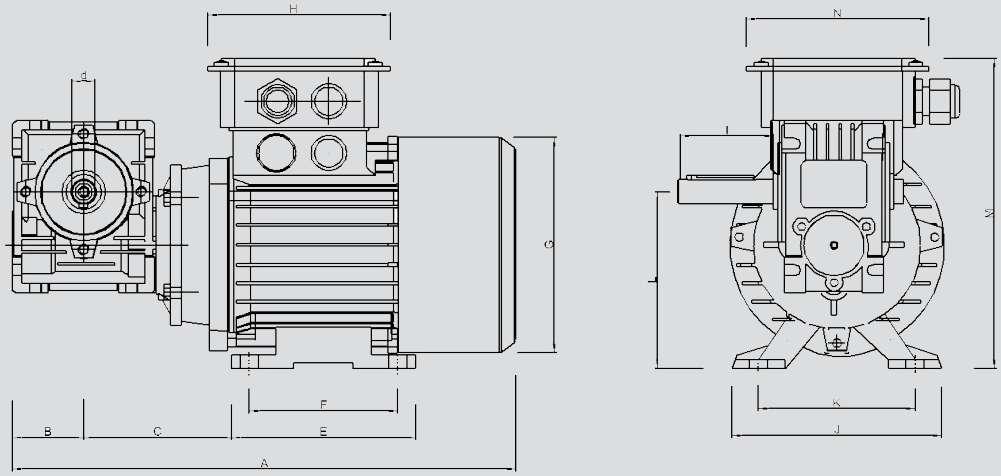

MOTOR	A	B	C	d	E	F	G	H	I	J	K	L	M	N
180/72	286	40	85	14	105	80	123	101	61	120	100	93	165	101
180/140	286	40	85	14	105	80	123	101	61	120	100	93	165	101
180/200	286	40	85	14	105	80	123	101	61	120	100	93	165	101

Technical data at 50 Hz

VVX-motor	180/72	180/140	180/200
Efficiency class	IE2	IE2	IE2
Poles	4	4	4
Rated output	180 W	180 W	180 W
Rated current 230/400 V	1,2/0,7 A	1,2/0,7 A	1,2/0,7 A
Connection voltage	3x230/400 V	3x230/400 V	3x230/400 V
Rated speed output gear	72 rpm	140 rpm	200 rpm
Ambient temperature	-15 - +40 °C	-15 - +40 °C	-15 - +40 °C
Maximum operating temperature	<+40 °C	<+40 °C	<+40 °C
Rated torque output gear	13,6 Nm	8,2 Nm	6,0 Nm
Gear ratio	1:20	1:10	1:7
Protection form	IP55	IP55	IP55
Weight	5,2 kg	5,2 kg	5,2 kg

Max rotor diameter at rotor speed 12 rpm

Motor	180/72	180/140	180/200
Rotor diameter	2500 mm	2500 mm	2500 mm

Other data

When run with our control units, the motor must be D-connected (3 x 230 V).

Worm gear motor IE2 3x230/400 V, 50 Hz

F22370093	370/92
F22370141	370/140
F22370210	370/200
F22750204	750/200 - this is an IE3 motor

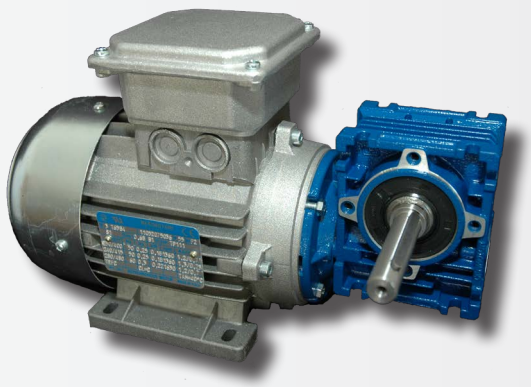

- Adapted for variable speed control
- Aluminium coating for better thermal dissipation
- Built-in thermal contact, drawn to terminal
- Compact built-in dimensions according to IEC-standards
- Extended output shaft
- Two-year product warranty

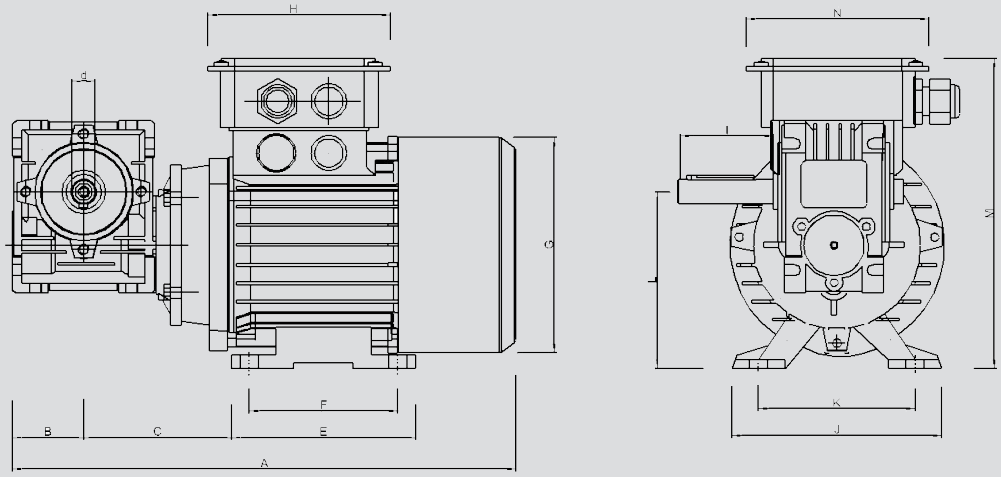

MOTOR	A	B	C	d	E	F	G	H	I	J	K	L	M	N
370/92	340	50	105	18	108	90	137	101	70	136	112	111	182	101
370/140	340	50	105	18	108	90	137	101	70	136	112	111	182	101
370/200	340	50	105	18	108	90	137	101	70	136	112	111	182	101
750/200	380	60	115	25	125	100	156	115	89	154	125	127	202	115

Technical data at 50 Hz

VVX-motor	370/92	370/140	370/200	750/200
Efficiency class	IE2	IE2	IE2	IE3
Poles	4	4	4	4
Rated output	370 W	370 W	370 W	750 W
Rated current 230/400 V	1,8/1,05 A	1,8/1,05 A	1,8/1,05 A	3,3/1,9 A
Connection voltage	3x230/400 V	3x230/400 V	3x230/400 V	3x230/400 V
Rated speed output gear	92 rpm	140 rpm	200 rpm	200 rpm
Ambient temperature	-15 - +40 °C	-15 - +40 °C	-15 - +40 °C	-15 - +40 °C
Maximum operating temperature	<+40 °C	<+40 °C	<+40 °C	<+40 °C
Rated torque output gear	23,8 Nm	17,4 Nm	12,7 Nm	26,1 Nm
Gear ratio	1:15	1:10	1:7	1:7
Protection form	IP55	IP55	IP55	IP55
Weight	8,4 kg	8,4 kg	8,4 kg	13,9 kg

Max rotor diameter at rotor speed 12 rpm

Motor	370/92	370/140	370/200	750/200
Rotor diameter	3500 mm	3500 mm	3500 mm	5000 mm

Other data

When run with our control units, the motor must be D-connected (3 x 230 V).

Worm gear motor IE3 3x230/400 V, 50 Hz

F22750200 1500/200

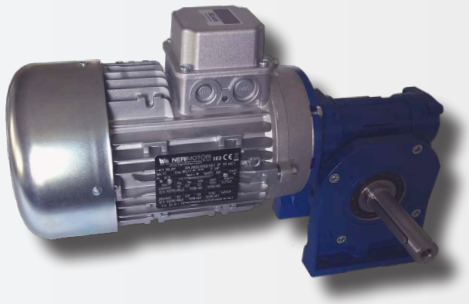

- Adapted for variable speed control
- Aluminium coating for better thermal dissipation
- Built-in thermal contact, drawn to terminal
- Compact built-in dimensions according to IEC-standards
- Extended output shaft
- Two-year product warranty

IBC control

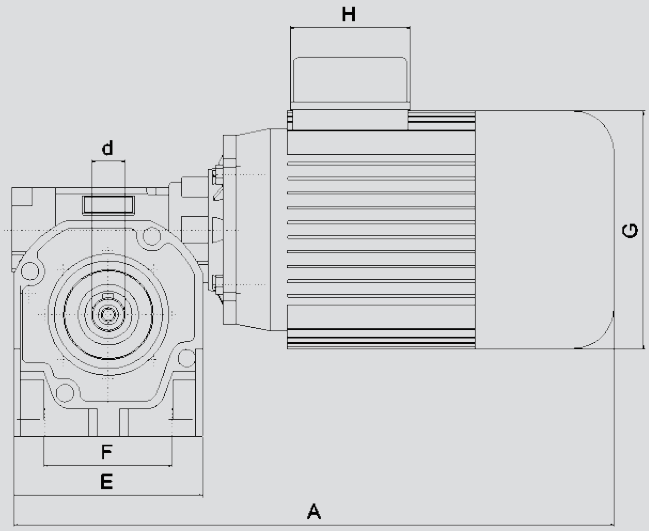

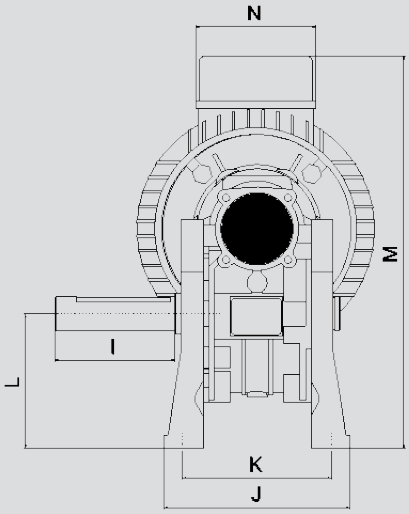

MOTOR	A	d	E	F	G	H	I	J	K	L	M	N
1500/200	445	25	140	95	176	91	89	138	111	100	291	91

Technical data at 50 Hz

VVX-motor	1500/200
Efficiency class	IE3
Poles	4
Rated output	1500 W
Rated current 230/400 V	5,7/3,3 A
Connection voltage	3x230/400 V
Rated speed output gear	200 rpm
Ambient temperature	-15 - +40 °C
Maximum operating temperature	<+40 °C
Rated torque output gear	68,2 Nm
Gear ratio	1:7
Protection form	IP55
Weight	24,7 kg

Max rotor diameter at rotor speed 12 rpm

Motor	1500/200
Rotor diameter	8000 mm

Other data

When run with our control units, the motor must be D-connected (3 x 230 V).

Worm gear motor IE1 3x230/400 V, 50 HZ

According to the Ecodesign Directive EU 2019/1781, the motors below may only be used as spare parts. Valid from July 1, 2021.

F22370092	370/92
F22370140	370/140
F22370200	370/200
F22750200	750/200

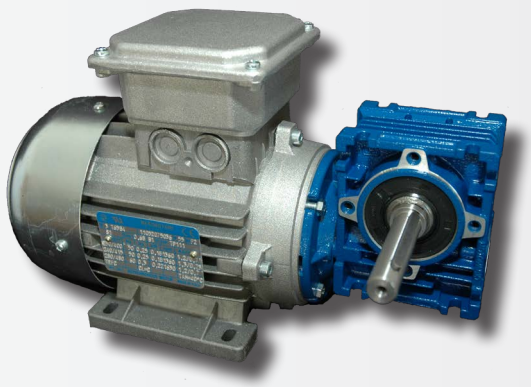

- Adapted for variable speed control
- Aluminium coating for better thermal dissipation
- Built-in thermal contact, drawn to terminal
- Compact built-in dimensions according to IEC-standards
- Extended output shaft
- Two-year product warranty

IBC control

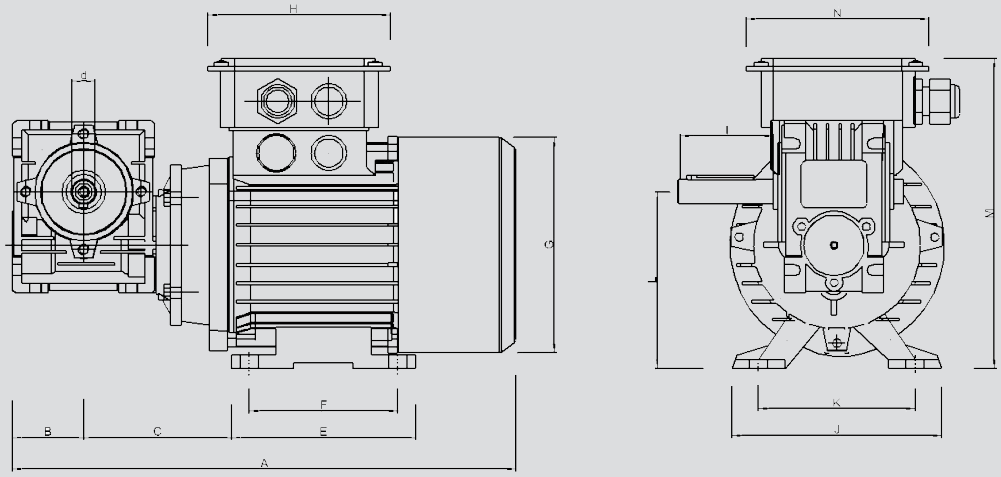

MOTOR	A	B	C	d	E	F	G	H	I	J	K	L	M	N
370/92	340	50	105	18	108	90	137	101	70	136	112	111	182	101
370/140	340	50	105	18	108	90	137	101	70	136	112	111	182	101
370/200	340	50	105	18	108	90	137	101	70	136	112	111	182	101
750/200	380	60	115	25	125	100	156	115	89	154	125	127	202	115

Technical data at 50 Hz

VVX-motor	370/92	370/140	370/200	750/200
Efficiency class	IE1	IE1	IE1	IE1
Rated output	370 W	370 W	370 W	750 W
Rated current 230/400 V	1,7/1,0 A	1,7/1,0 A	1,7/1,0 A	3,5/2,0 A
Rated speed	92 rpm	140 rpm	200 rpm	200 rpm
Gear ratio	1:15	1:10	1:7	1:7
Rated torque	23,8 Nm	17,4 Nm	12,7 Nm	26,1 Nm
Protection form	IP55	IP55	IP55	IP55
Connection voltage	3x230/400 V	3x230/400 V	3x230/400 V	3x230/400 V
Weight	8,4 kg	8,4 kg	8,4 kg	13,9 kg

Max rotor diameter at rotor speed 12 rpm

Motor	370/92	370/140	370/200	750/200
Rotor diameter	3500 mm	3500 mm	3500 mm	5000 mm

Other data

When run with our control units, the motor must be D-connected (3 x 230 V).

Stepper motor 3-phase 325 V DC

Used together with VariMax25, 50 and 100 CE

F22025501	VariMax-motor25 CE
F22050501	VariMax-motor50 CE
F22100501	VariMax-motor100 CE

- Adapted for variable speed control
- Built-in thermal contact, drawn to terminal
- Compact built-in dimensions
- CE-approved
- Five-year product warranty

IBC control

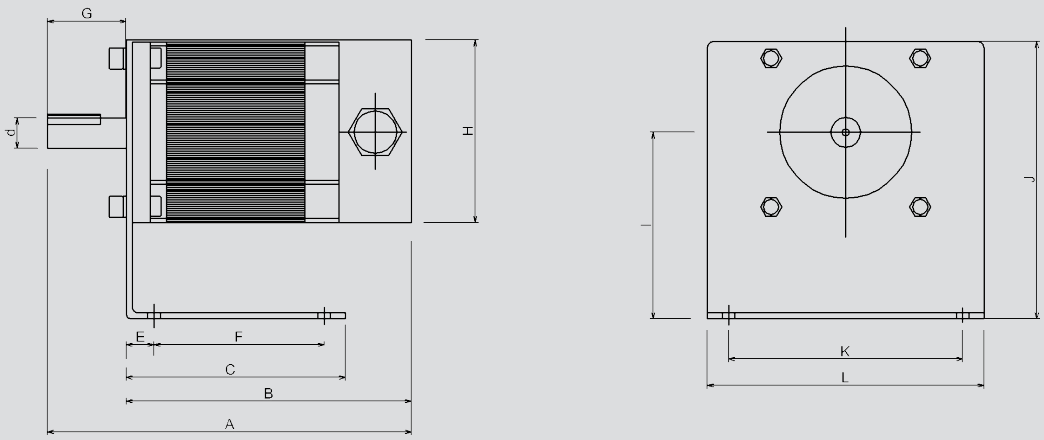

MOTOR	A	B	C	d	E	F	G	H	I	J	K	L
25	141	105	103	14	13	80	40	85	67	110	110	130
50	171	131	103	14	13	80	40	85	87	130	110	130
100	177	145	103	19	13	80	35	110	87	142	130	150

Technical data

VariMax-motor CE	25	50	100
Max torque	2 Nm	4 Nm	10 Nm
Min rotation speed	1 rpm	1 rpm	1 rpm
Max rotation speed	350 rpm	375 rpm	400 rpm
Motor temp. mantle max	110 °C	110 °C	110 °C
Ambient temperature	-30 - +45 °C -40 - +45 °C *)	-30 - +45 °C -40 - +45 °C *)	-30 - +45 °C -40 - +45 °C *)
Protection form	IP54	IP54	IP54
Weight incl. motor bracket	2,6 kg	4 kg	8,4 kg

*) Note, at -40 °C, the control unit must be connected to power all the time

Max rotor diameter at rotor speed 12 rpm

Motor	25	50	100
Rotor diameter	1500 mm	2500 mm	3900 mm

Stepper motor NG 3-phase 325 V DC

Used together with VariMax25, 50 and 100 NG

F22025401 VariMax-motor25 NG

F22050401 VariMax-motor50 NG

- Adapted for variable speed control
- Compact built-in dimensions
- CE-approved
- Five-year product warranty

IBC control

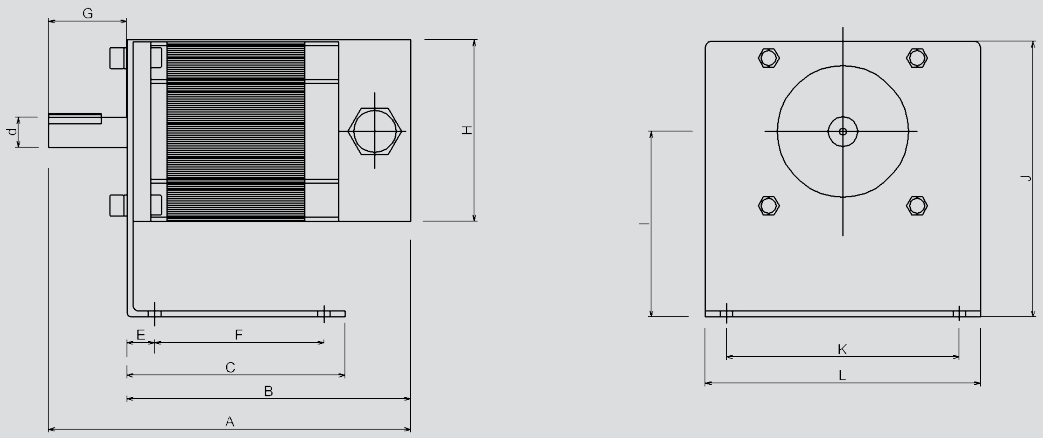

MOTOR	A	B	C	d	E	F	G	H	I	J	K	L
25	141	105	103	14	13	80	40	85	67	110	110	130
50	171	131	103	14	13	80	40	85	87	130	110	130

Technical data

VariMax-motor NG	25	50
Max torque	2 Nm	4 Nm
Min rotation speed	1 rpm	1 rpm
Max rotation speed	350 rpm	375 rpm
Motor temp. mantle max	110 °C	110 °C
Ambient temperature	-30 - +45 °C -40 - +45 °C *)	-30 - +45 °C -40 - +45 °C *)
Protection form	IP54	IP54
Weight incl. motor bracket	2,6 kg	4 kg

*) Note, at -40 °C, the control unit must be connected to power all the time

Max rotor diameter at rotor speed 12 rpm

Motor	25	50
Rotor diameter	1500 mm	2500 mm

EMC-set for enclosed control units

Set of glands for mounting according to the EMC-directive, intended for enclosed control units.

Available for the control units MiniMax, MicroMax, VariMax and MicroStart.

F29801314	MiniMax, MicroMax and VariMax, M-thread
F29804301	MicroStart. Set of glands plastic, M-thread, non EMC

Rotation monitor with magnet

Rotation monitor including magnet and bracket for easy mounting.

Standard cable lenght is 2 m.

Also available with cable lenght 3 m, 5 m or 10 m.

F29510101	Length of cable 2 meters
F29510107	Length of cable 3 meters
F29510106	Length of cable 5 meters
F29510109	Length of cable 10 meters

Rotation monitor with magnet and bracket

Rotation monitor including magnet and bracket for easy mounting.

Standard cable lenght is 2 m.

Also available with cable lenght 3 m, 5 m or 10 m.

F29510102	Length of cable 2 meters
F29510104	Length of cable 3 meters
F29510105	Length of cable 5 meters
F29510110	Length of cable 10 meters

V-belt and belt clip

V-belt, 13 x 8 mm, joined by a belt splice, jointed or firm.

F29130800	V-belt A-profile, 13 x 8 mm
F29130801	Clip for V-belt, fixed
F29130802	Clip for V-belt, flexible

IBC control

Round belt and splice pin

Elastic roundbelt joined by a pin.

Available in diameters:

F29000600	6 mm for max rotor diameters of 600 mm
F29000800	8 mm for max rotor diameters of 1700 mm
F29001000	10 mm for max rotor diameters of 2200 mm
F29001200	12 mm for max rotor diameters of 2500 mm

Minimum recommended pulley size:

6 mm round belt: 56 mm	10 mm round belt: 75 mm
8 mm round belt: 63 mm	12 mm round belt: 85 mm

F29000603	Splice pin, 6 mm
F29000803	Splice pin, 8 mm
F29001003	Splice pin, 10 mm
F29001203	Splice pin, 12 mm

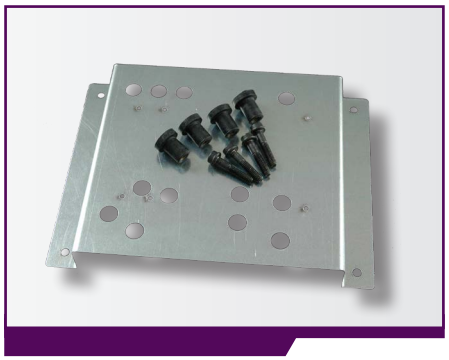

Motor shelf, fixed

Used with round belt

F29910113	Motor shelf, fixed

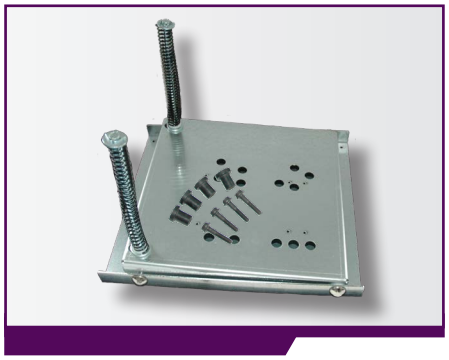

Motor shelf, spring-mounted

Used with V-belt

F29910114	Motor shelf, spring-mounted

Bush pulley SPA

Bush pulleys type SPA in different diameters adapted to rotor size and gear on motor.

Delivered with bushing adapted to diameter of the gear shaft.

F23063003	SPA 63	Bushing 1008
F23067003	SPA 67	Bushing 1108
F23071003	SPA 71	Bushing 1108
F23075003	SPA 75	Bushing 1108
F23080003	SPA 80	Bushing 1210
F23085003	SPA 85	Bushing 1210
F23090003	SPA 90	Bushing 1210
F23095003	SPA 95	Bushing 1210
F23100003	SPA 100	Bushing 1610
F23106003	SPA 106	Bushing 1610
F23112003	SPA 112	Bushing 1610
F23118003	SPA 118	Bushing 1610
F23125003	SPA 125	Bushing 1610
F23132003	SPA 132	Bushing 1610
F23140003	SPA 140	Bushing 1610
F23150003	SPA 150	Bushing 1610
F23160003	SPA 160	Bushing 1610
F23170003	SPA 170	Bushing 1610

Bushing for SPA-pulley

F23630000	Bushing 1008	shaft hole 10 mm
F23630002	Bushing 1008	shaft hole 12 mm
F23630004	Bushing 1008	shaft hole 14 mm
F23630750	Bushing 1108	shaft hole 10 mm
F23630752	Bushing 1108	shaft hole 12 mm
F23630754	Bushing 1108	shaft hole 14 mm
F23800950	Bushing 1210	shaft hole 10 mm
F23800952	Bushing 1210	shaft hole 12 mm
F23800954	Bushing 1210	shaft hole 14 mm
F23800955	Bushing 1210	shaft hole 15 mm
F23800958	Bushing 1210	shaft hole 18 mm
F23001500	Bushing 1610	shaft hole 10 mm
F23001502	Bushing 1610	shaft hole 12 mm
F23001504	Bushing 1610	shaft hole 14 mm
F23001505	Bushing 1610	shaft hole 15 mm
F23001508	Bushing 1610	shaft hole 18 mm
F23001509	Bushing 1610	shaft hole 19 mm
F23001525	Bushing 1610	shaft hole 25 mm

IBC control

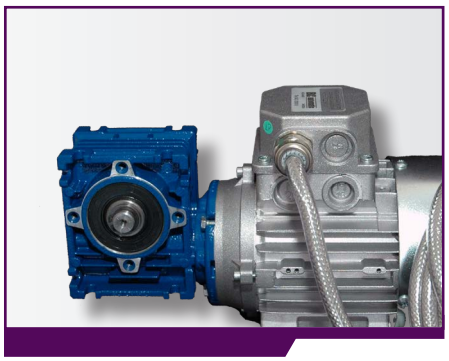

Connected motor according to EMC-directives

Motor connected according to the EMC-directive with shielded motor cable.

EMC-cabling for motor 25 W, 40 W and 60 W

F29807215	Length of cable 1,5 meters
F29807220	Length of cable 2 meters

EMC-cabling for motor 90 W

F29807420	Length of cable 2 meters

EMC-cabling for motor 180 W, 370 W and 750 W

F29807430	Length of cable 3 meters

Motor capacitor for 1-phase motors

The motor capacitor is normally supplied with the motor, but can also be purchased as a spare part.

F29920111	Motor capasitor 0,6 µF	Motor 6 W
F29920112	Motor capasitor 1,3 µF	Motor 25 W
F29920113	Motor capasitor 1,5 µF	Motor 25 W Tacho
F29920114	Motor capasitor 2,0 µF	Motor 40 W
F29920115	Motor capasitor 2,0 µF	Motor 40 W Tacho
F29920116	Motor capasitor 6,3 µF	Motor 90 W
F29920117	Motor capasitor 10,0 µF	Motor 180 W

Additional cards

Additional cards are adapted to the MiniMax and are available as:

F29110107	Diff temperature regulator with electric heat output
F29316101	2-rotor module

Duct sensor PTC

Temperature sensor is used with the diff teperature regulator above.

F29520101	Duct sensor

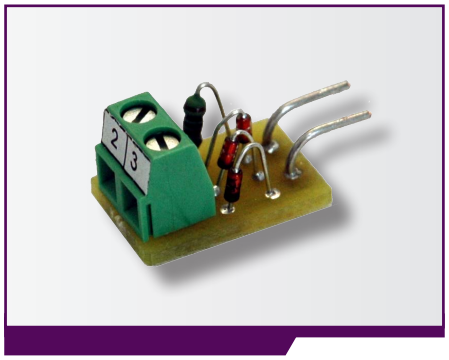

Increased input signal

Used when the residual value of the regulator exceeds the threshold value (0.1 V). Used for MicroMax series.

F29315101 Increased input signal

Reset module

Mounted in the bottom flange when wanting to reset without dismounting the cap. Used for VariMax and MiniMax.

F29320101 Reset module

Testbox for setup

Used for temporary runs/tests. Suitable for all our control units.

F29314101 Testbox for setup of control units

PERSONAL NOTES

REVISED, JULY 2023

DISTRIBUTORS

Sweden

Ekström & Söner AB
Storsätragränd 6
SE-127 39 Skärholmen
Tel +46 8 72 69 550
info@ekstrom-soner.se
www.ekstrom-soner.se

ÖsTek AB
Box 45
Kvarngatan 5
SE-748 21 Österbybruk
Tel +46 295 211 15
info@ostek.se
www.ostek.se

Norway

Parlock A/S
PB. 196
Ringeriksveien 171
NO-3300 Hokksund
Tel +47 32 75 44 77
parlock@online.no
www.parlock.no

Finland

Taniplan Oy
Kylätie 18 B 20
FI-00320 Helsinki
Tel +358 9458 31 20
info@taniplan.fi
www.taniplan.fi

Denmark

E. Klink A/S
Dybendal Allé 10
DK-2630 Taastrup
Tel +45 44 91 28 91
eklink@eklink.dk
www.eklink.dk

Germany

Rototeam GmbH
Bahnhofstrasse 4
DE-55576 Welgesheim
Tel +49 67 01 20 50 170
kontakt@rototeam.de
www.rototeam.de

IBC control

IBC control AB
Brännerigatan 5 A
263 37 Höganäs
Sweden
Tel +46 42 33 00 10
www.ibccontrol.se
info@ibccontrol.se