AX-CNDR-XXX

Digital Room Controller (BACnet BN) (Timeclock T)

Product overview

The AX-CNDR-XXX range of Digital Room Controllers feature a high-contrast blue backlit display with white text, and fit a standard single gang pattress.

The unit has selection for an internal or external temperature sensor and provides an adjustable proportional and integral heating and cooling outputs or on/off control depending on unit type.

The clear display indicates room temperature, fan speed, occupancy and window status.

Timeclock option available with 2 on/off times per day (with independent setpoints) and 5/2 day (Week/weekend) or 7 day (All week) timer actions.

The unit has a keycard / occupancy input with adjustable set back and exit delay and a window contact input.

Network connectivity is provided with an isolated BACnet MSTP / RTU link, supports COV. (BN version).

Features

- 0-10V PI heating and cooling outputs
- 0-10V PI cooling with On/Off heating (CRX versions)
- 0-10V fan speed control with Auto (XXE versions)
- On/off heating /cooling control (RXX versions)
- 3 speed fan speed control with Auto (XX3 versions)
- Isolated BACnet MSTP / RTU, supports COV (BN version)
- Adjustable setpoint range
- Keycard / occupancy input, adjustable exit delay
- Window contact input
- Unused Keycard / Window contact inputs available as digital inputs
- Fits a standard single gang deep back box
- Two part plug-in connectors for easy installation
- Built in terminating resistor (BN version)

Order codes

AX-CNDR-HCE Digital room controller, 0-10V heating, cooling and fanspeed

AX-CNDR-HCF DRC, 0-10V heating, cooling, for remote fan relays, uses AX-CNDR-RMAF

AX-CNDR-HCEBN Digital room controller, 0-10V heating, cooling and fanspeed, BACnet

AX-CNDR-HCFBN DRC, 0-10V heating, cooling, BACnet, for remote fan relays, uses AX-CNDR-RMAF

AX-CNDR-HC3 Digital room controller, 0-10V heating and cooling, 3 fanspeed relays

AX-CNDR-HC3-230 Digital room controller, 0-10V heating and cooling, 3 fanspeed relays, 230Vac supply

continued on next page……

ANNICOM Ltd
Unit 21 Highview, High Street, Bordon, Hampshire. GU35 0AX
Tel: +44 (0)1420 487788 Fax: +44 (0)1420 487799
Email: sales@annicom.com Website: www.annicom.com

© Copyright Annicom 2018. All Rights Reserved

AX-CNDR-HRCE Digital room controller, On/off heating, 0-10V cooling and fanspeed

AX-CNDR-HC Digital room controller, 0-10V heating and cooling, no fans

AX-CNDR-RE Digital room controller, On/off heating or cooling, 0-10V fanspeed

AX-CNDR-R3 Digital room controller, On/off heating or cooling, 3 fanspeed relays

AX-CNDR-HCET Digital room controller, 0-10V heating, cooling and fanspeed, timeclock

AX-CNDR-HC3T Digital room controller, 0-10V heating and cooling, 3 fanspeed relays, timeclock

AX-CNDR-HRCET Digital room controller, On/off heating and 0-10V cooling and fanspeed, timeclock

AX-CNDR-HCT Digital room controller, 0-10V heating and cooling, timeclock

Product specifications (Dependant on specific unit)

Power Supply	24Vac/dc,except 230Vac for -230 version
Inputs	External temperature sensor
	VFC inputs for Occupancy / Keycard contact and Window contact.
Heat, Cool, Fan speed outputs	0-10Vdc at 5mA maximum
Fan Relays (If fitted)	8A resistive at 250Vac
On/Off Relays (If fitted)	8A resistive at 250Vac
Network	BACnet MSTP / RTU 19K2, 38K4, 57K6, 76K8 and 115K2 baud rates
Finish (Plate)	Vertical brushed stainless steel
Weight & Dimensions	250gms (approx) 86 x 86 x 35mm (approx)
Backbox Depth	45mm
Ambient Temperature Range	0˚C to 60˚C
Country of Origin	United Kingdom

Datasheet contents

Every effort has been taken in the production of this data sheet to ensure accuracy. Annicom do not accept responsibility for any damage, expense, injury, loss or consequential loss resulting from any errors or omissions. Annicom has a policy of continuous improvement and reserves the right to change this specification without notice.

Installation

The unit should be installed by a suitably qualified technician in conjunction with any guidelines for the equipment it is to be connected to and any local regulations. Field wiring should be installed to satisfy the requirements set out by the manufacturer of the equipment that the module is being connected to.

Menu

Follow the steps below to enter the menu, listed options not available on all units

1. Switch unit off

2. Press and hold ON switch

3. Keep ON switch pressed and press and hold setpoint increase at the same time

4. Keep both switches pressed for 10 seconds. The display will change to the setpoint high limit option.

5. Press ON button to scroll menu options described below. When required option is displayed press setpoint decrease or setpoint increase to adjust value or enable/disable option. When changes are complete do not press any buttons for 10 seconds and the unit will store new values and return to normal operation.

© Copyright Annicom 2018. All Rights Reserved

Menu options [Menu display mnemonic] (Default value)

Setpoint high limit [SPHi]

This sets the highest value the user can adjust the setpoint to. Range 25 - 30 ºC. (28)

Setpoint low limit [SPLo]

This sets the lowest value the user can adjust the setpoint to. Range 15 - 20 ºC. (18)

Sensor selection [SEnS]

This selects between the internal and external temperature sensor. Selection Int / Ets. (Int)

Temperature offset [OFSt]

This offsets the temperature from the calculated value. Positive values increase the temperature and negative values decrease the temperature. Range -10 to +10 ºC. (0)

Operating mode [OPEr]

This sets the unit operating mode. Available options heating / cooling / heating and cooling. (HC)

Proportional band [Pbnd] (PI versions)

This sets the heating and cooling proportional band. Range 1 - 30 ºC. (5)

Fan band [Fbnd] (On/off only versions)

This sets the auto band for fan control. Range 1 - 30 ºC. (5)

Integral time [Int] (PI versions)

This sets the heating and cooling integral time. Range OFF / 1 - 600 seconds. (200)

Deadband [ddbn] (PI versions)

This sets the deadband range between the proportional heating and cooling outputs. Range 0.5 - 10 ºC. (5)

Hysteresis [hYSt] (On/off only versions)

This sets the switching hysteresis for On/off control. Range 0.5 - 10 ºC. (5)

Fan speed steps [FnSt] (0-10V fanspeed version only)

This sets the number of steps that cover the output fan speed. For example selecting 10 will cause the output to change in 10 steps, 1 volt increments. Selection 3 / 10. (3)

Keycard / occupancy input [CArd]

This enables or disables the keycard / occupancy input. The Setback and Exit delay options are only available when the keycard / occupancy input is enabled. (DIS)

Setback [SbAc]

This sets the amount the heating and cooling will be setback when the room is empty. The Setback option is only available when the keycard / occupancy input is enabled. Range 1 - 20 ºC. (5)

Exit delay [EdEL]

This sets the time delay before the heating and cooling is setback and the fan is set to low speed when the room is empty. The Exit delay option is only available when the keycard / occupancy input is enabled. Range 0 - 90 minutes, in 5 minute steps. (50)

Window input [UUin]

This enables or disables the window contact input. (DIS)

Setpoint switch actions [SPAc]

This enables or disables the setpoint buttons. (EN)

Fanspeed switch actions [FSAc]

This enables or disables the fanspeed buttons. (EN)

On Off switch actions [OnAc]

This enables or disables the on off button. (EN) (Menu entry will not be disabled)

MSTP address [Addr] (BN version only)

This sets the unit BACnet MSTP address. This must be set to be a unique number on the local MSTP network or communication conflicts will occur. Range 0 to 127. (16)

Maximum MSTP address [UPAd] (BN version)

This sets the maximum MSTP address that the unit will poll when looking for other units. If this is set lower than the address of the next unit polling will loop back to address 0 and the next unit will not be found. Range 0 to 127. (64)

Baud rate [bAud] (BN version)

This sets the unit MSTP baud rate. This should be set to the same value as current units on the network. Available options 19K2, 38K4, 57K6, 76K8 and 115K2. (38K4)

© Copyright Annicom 2018. All Rights Reserved

BACnet device instance [din1] to din7

This sets the BACnet device instance seen on the network. This should eventually be set to a network wide unique value in the range 0 to 4194302. (898000)

Press SP- to scroll through the digits from left to right. The display will show din1 when the first digit (left digit) is selected increasing to din7 when the last digit (right digit) is selected. Press SP+ to modify the selected digit. All digits should be set including leading zeroes. For example a value of 0 would be set as 0000000 and a value of 898 would be set as 0000898.

BACnet reset [bnrS] (BN version only)

This sets all BACnet MSTP object names and instances to default values. Select 123 on the display and wait for menu to time out. The thermostat operating values are not modified.

Pressing the BACNET RESET button for 10 seconds will also reset these values.

Operation

PI versions

The AX-CNDR-XXX controls room heating and cooling. The unit provides a 0-10V heating and / or cooling output relative to the setpoint / setback / deadband and proportional band. (On/off heating on CR3 version) If the integral time is set the output will also vary with temperature error over time. The fan speed can be set in 3 or 10 steps in manual or when auto is set the fan speed is automatically controlled in 3 or 10 steps relative to the 0-10V heating and cooling output. (10 steps only available on 0-10V fan speed versions)

On/off versions

The AX-CNDR-XXX controls room heating and cooling. The unit provides On/off heating and / or cooling output relative to the setpoint / setback / hysteresis. The fan speed can be set in 3 steps in manual or when auto is set the fan speed is automatically controlled in 3 steps relative to the Fan band setting.

Key card contact / occupancy input

This accepts a volt free output from a keycard or occupancy sensor (or similar device). When the input is closed the room will be considered occupied (the Person symbol is displayed in the House symbol). If this input is enabled in the menu the heating and cooling will be set back by the setback value and the fan set to low speed when the room has been un-occupied for the exit delay time. A count down of the exit delay is displayed. If this input is connected to a PIR (for example) and the exit delay is set the PIR's internal delay should be set to zero. If the key card actions are not required they can be disabled and the input used as a digital input.

AX-CNDR-HCF / AX-CNDR-HCFBN

Unit operates as standard HCEBN unit except analogue fan output is preset to drive an AX-CNDR-RMAF 3 fan interlocked relay module.

Window contact input

This accepts a volt free contact from a window switch. The switch should be closed when the window is closed. If the window input is enabled in the menu and the window is open the heating and cooling output is set to zero and the fan is set to speed low (UUin is displayed). If the window contact actions are not required they can be disabled and the input used as a digital input.

User controls

On / Off

The user can switch the unit on or off. When the unit is off the cooling output will be zero and the fan is off. On / Off switch actions can be disabled via the operating menu.

Setpoint

The user can adjust the setpoint between the Setpoint high and Setpoint low limits set in the menu. For timeclock versions the setpoint will only change for the remainder of the current time period reverting back to the preset value during the next cycle. Setpoint switch actions can be disabled via the operating menu.

Fan speed

0-10V fan speed version

The user can set the fan speed in 3 or 10 steps as selected or auto. When auto is selected the fan speed will be set in 3 or 10 steps relative to the 0-10V heating or cooling output. The fan speed is displayed in three or ten steps on the bottom display bar.

3 relay fan speed version

The user can set the fan speed to low/med/high or auto. When auto is selected the fan speed will be set relative

© Copyright Annicom 2018. All Rights Reserved

to the 0-10V heating or cooling output for PI versions or relative to the Fan band for On/off versions. The fan speed is displayed in three steps on the bottom display bar.

Fan speed switch actions can be disabled via the operating menu.

Fitting and removing front plate

To fit front plate with the back plate fitted to the wall carefully bring front plate towards back plate and locate switches in front plate holes then move plate to one side and clip over one side of back plate then push front plate in opposite direction and push front to clip onto back plate.

To remove front plate carefully insert slotted screwdriver into slot on side of thermostat and lever forward making sure plate does not fall.

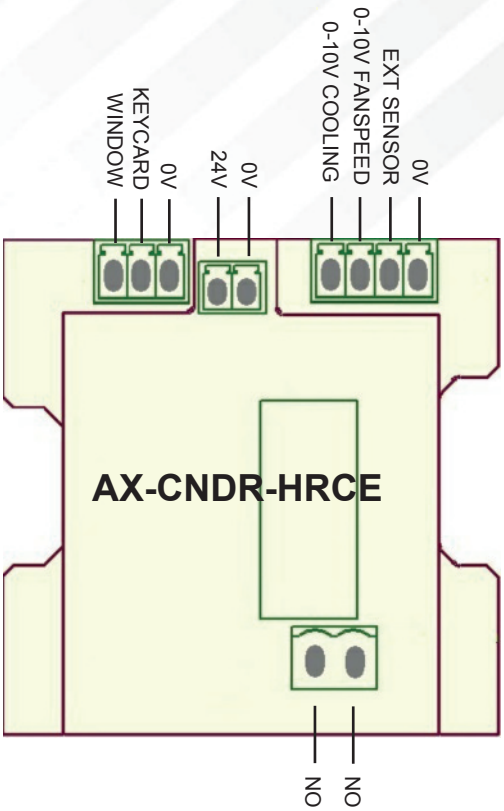

HEATING RELAY

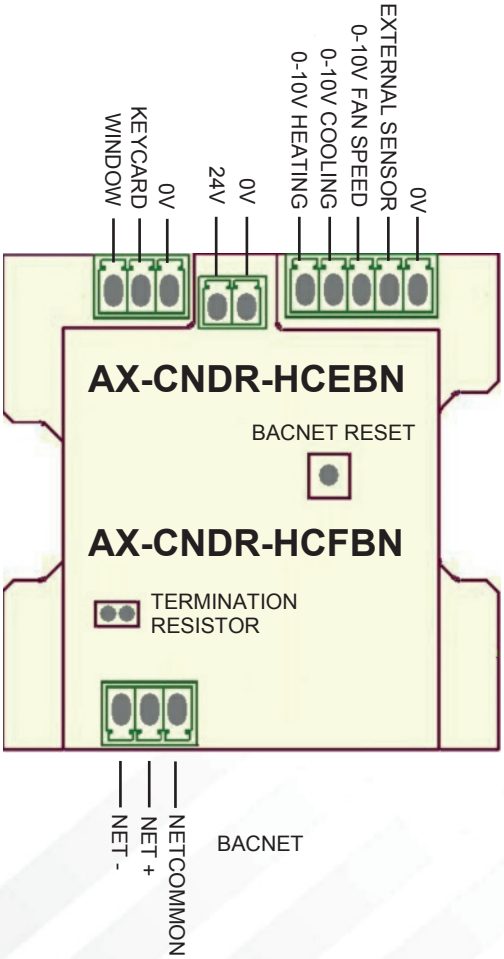

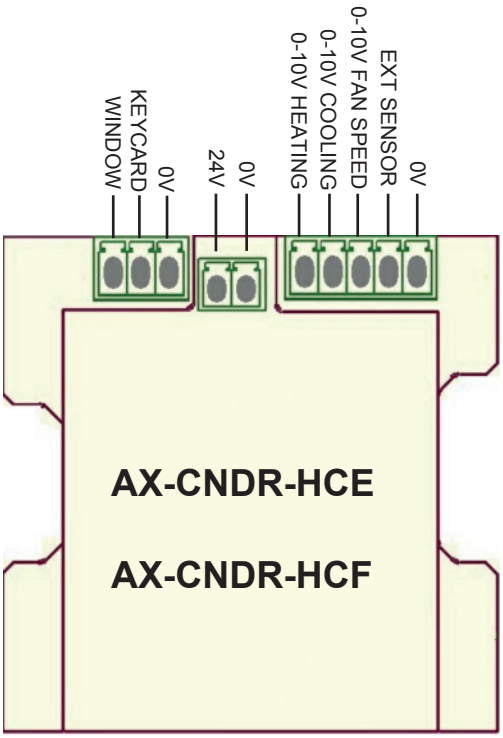

© Copyright Annicom 2018. All Rights Reserved

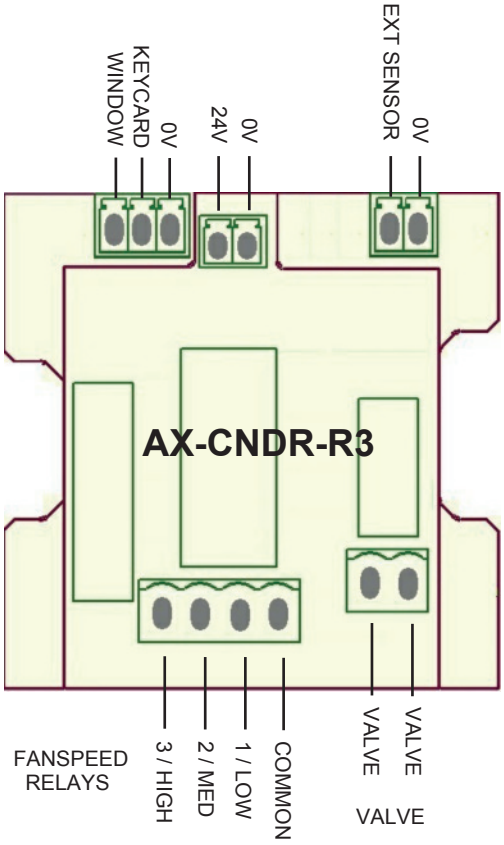

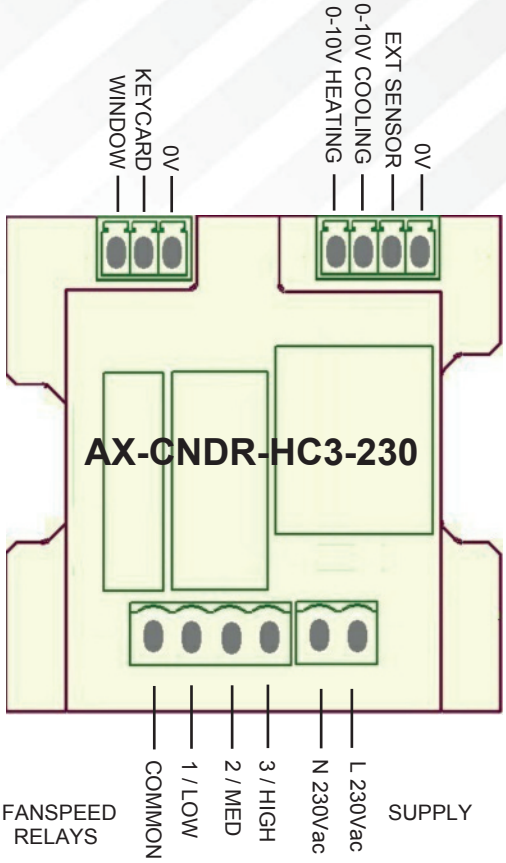

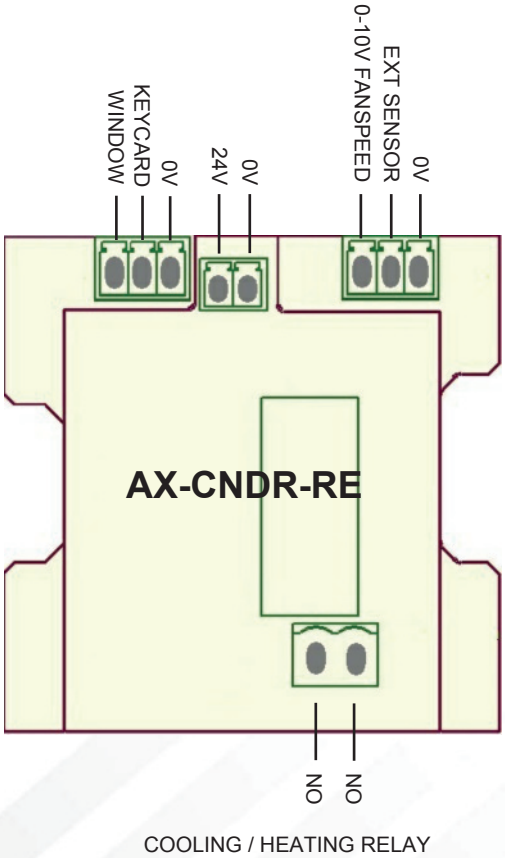

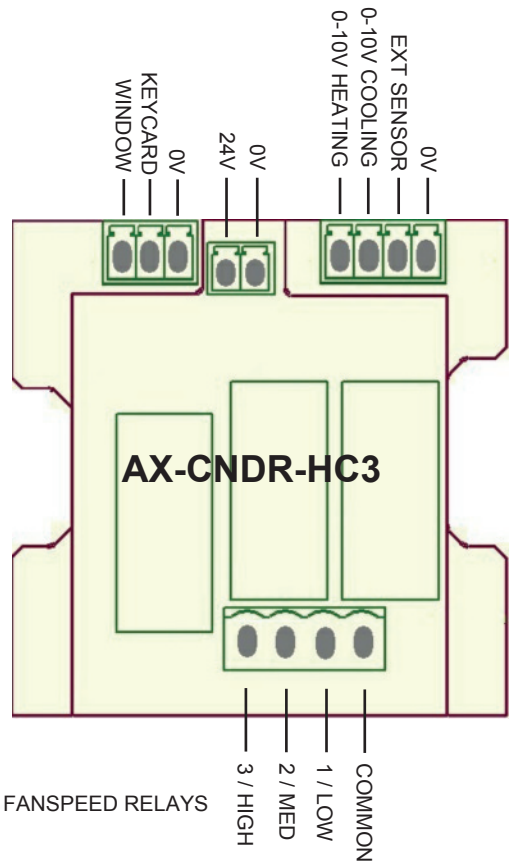

© Copyright Annicom 2018. All Rights Reserved

Timeclock (T version)

The time clock operates on either a 5/2 day cycle or a 7 day cycle. Each part of the cycle has 2 on / off time settings, 1 On / 1 Off and 2 On / 2 Off. The unit has 2 timeclock setpoints, SP1 is used during 1 On / 1 Off periods and SP2 is used during 2 On / 2 Off periods. If the setpoint is adjusted during a timer period the in use value will change for the remainder of that period but it will not be stored and will revert back to SP 1 or SP 2 for the next cycle.

If 1 On / 1 Off and 2 On / 2 Off periods overlap SP2 has priority. This allows 1 On / 1 Off to be set for the whole day and 2 On / 2 Off to be set for a time within the day.

Mode

Press On/Off button to cycle through the modes, On / Auto / Off. When auto mode is selected the time display shows Auto for 5 seconds followed by the time. The time display will then continue to change between time and Auto to show the unit is in Auto mode.

Timeclock Menu

Follow the steps below to enter the menu, listed options not available on all units

1. Press and hold ON switch for 5 seconds. The display will change to the timeclock set year option.

5. Press ON button to scroll menu options described below. When required option is displayed press setpoint decrease or setpoint increase to adjust value or enable/disable option. When changes are complete do not press any buttons for 10 seconds and the unit will store new values and return to normal operation.

Set year [YEAr]

Timeclock year setting. Range 15 - 65 for 2015 to 2065.

Set month [MMon]

Timeclock month setting. Range 1 - 12 for January to December.

Set date [dAtE]

Timeclock year setting. Range 1 - 31 for day of month.

Set hour [Hour]

Timeclock hour setting. Range 0 - 23.

Set minute [MMin]

Timeclock year setting. Range 0 - 59.

Set 12 / 24 hour mode [1224]

12 or 24 hour clock display setting. Section. 12 or 24.

Setpoint 1 [SP 1]

Sets the setpoint value used during on/off time 1. Range, setpoint low to setpoint high limits as set.

Setpoint 2 [SP 2]

Sets the setpoint value used during on/off time 2. Range, setpoint low to setpoint high limits as set.

Set time cycle [CYCL]

Selects between 5/2 day (Week/weekend) and 7 day (All week) timer actions. Selection 5₂ or 7.

Set on / off times

The display will show either Mon-Fri, Sat Sun or Mon - Sun along with settings for 2 on off actions [1-On], [1Off],[2-On], [2Off]. When the required option is shown press setpoint decrease or setpoint increase to adjust time in 15 minute steps.

© Copyright Annicom 2018. All Rights Reserved

BACnet (BN version)

PROTOCOL IMPLEMENTATION CONFORMANCE

Vendor Name: Annicom Ltd.

Vendor ID: 898

Product Name: AX-CNDR-HCEBN

Product Description

The AX-CNDR-HCEBN BACnet digital room controller communicating thermostat has been specifically designed for heating / cooling applications to be monitored on a BACnet MS-TP ® RTU network.

Supported BACnet Services

Data Sharing – Read Property

Data Sharing – Read Property Multiple

Data Sharing – Write Property

Data Sharing – Subscribe cov

Data Sharing – Subscribe cov property (PV only)

Supported BACnet Objects

Device

Analogue input

Analogue output

Analogue values

Binary input

Binary values

Multi state values

Note The controller does not support segmentation requests or responses

Change of value

This unit supports COV subscriptions on all object present value properties, this includes status flag monitoring. Only analogue objects have COV increment properties. Binary and multistate objects monitor for any change in present value.

Analogue input objects / [Instance]

Current sensor temperature (PV read only) [0]

Analogue output objects / [Instance]

Cooling output (PV read only) [20]

Heating output (PV read only) [21]

Fan output (PV read only) [22]

Analogue value objects / [Instance] (Default)

Temperature offset adjustment [32] (0)

Proportional band [33] (5)

Integral time [34] (200)

Current setpoint [35] (20)

Minimum setpoint [36] (18)

Maximum setpoint [37] (28)

Unoccupied setback [38] (5)

Room exit delay [39] (50)

Current fan speed (PV read only) [40]

Deadband [41] (5)

Manual fan speed [42]

MSTP address [101] (16)

Device instance [103] (898000)

Upper MSTP address [13] (64)

Binary input objects / [Instance]

Card contact input (PV read only) [104]

Window contact input (PV read only) [105]

Binary value objects / [Instance] (Default)

Enable card input actions [144] (0 - Disabled)

Enable window contact actions [145] (0 - Disabled)

Select sensor Internal / external [146] (0 - Internal)

Inhibit setpoint switch actions [147] (0 - Enabled)

Inhibit fan speed switch actions [148] (0 - Enabled)

Inhibit On / Off switch actions [149] (0 - Enabled)

Unit On / Off [150]

© Copyright Annicom 2018. All Rights Reserved

Multistate value objects / [Instance] (Default)

Fan step [184] (0 - 3 Steps)

Operating mode [185] (3 - Heat and Cool)

Baud rate [197] (2 - 38K4)

Object properties

Only properties marked (W) can be written. Present value (PV) properties marked (RO) are read only.

Device object properties

Device instance 898 (Default)(W)

Vendor name: Annicom Ltd.

Vendor Identifier: 898

Object list: As this list

Model Name: AX-CNDR-HCEBN

Max ADPU length accepted: 480

Max masters: 64 (Default), 1 to 127. (W)

Segmentation supported: No segmentation

Description: BACnet thermostat.

Object Name: Default BACnet thermostat. (W)

Object Type: Device

Status flags: In Alarm / Fault / Overridden / Out of Service

Event State: On Normal / Off Normal

Out of Service: False / True

Analogue Input object properties

Analogue Input instance 0

Description: Current sensor temperature

Name: Temperature

Object Type: Analogue input

Present value: From sensor (RO)

COV increment: 1.0 (W)

Units: Degrees centigrade

Status flags: In Alarm / Fault / Overridden / Out of Service

Event State: On Normal / Off Normal

Out of Service: False / True

Analogue Output object properties

Analogue Output instance 20

Description: Cooling output

Name: Cooling output

Object Type: Analogue output

Present value: Set by control actions (RO)

Units: Percentage

Status flags: In Alarm / Fault / Overridden / Out of Service

Event State: On Normal / Off Normal

Out of Service: False / True

Analogue Output instance 21

Description: Heating output

Name: Heating output

Object Type: Analogue output

Present value: Set by control actions (RO)

Units: Percentage

Status flags: In Alarm / Fault / Overridden / Out of Service

Event State: On Normal / Off Normal

Out of Service: False / True

Analogue Output instance 22

Description: Fan output

Name: Fan output

Object Type: Analogue output

Present value: Set by control actions (RO)

© Copyright Annicom 2018. All Rights Reserved

Units: Percentage

Status flags: In Alarm / Fault / Overridden / Out of Service

Event State: On Normal / Off Normal

Out of Service: False / True

Analogue Value object properties

Analogue Value instance 32

Description: Temperature offset adjustment

Name: Temperature offset

Object Type: Analogue value

Present value: As set, -10.0 to +10.0. (0.0) (W)

Units: Degrees centigrade

Status flags: In Alarm / Fault / Overridden / Out of Service

Event State: On Normal / Off Normal

Out of Service: False / True

Analogue Value instance 33

Description: Proportional band

Name: Proportional band

Object Type: Analogue value

Present value: As set, 1 to 30. (5.0) (W)

Units: Degrees centigrade

Status flags: In Alarm / Fault / Overridden / Out of Service

Event State: On Normal / Off Normal

Out of Service: False / True

Analogue Value instance 34

Description: Integral time

Name: Integral time

Object Type: Analogue value

Present value: As set, 0 (Off) to 600. (20) (W)

Units: Seconds

Status flags: In Alarm / Fault / Overridden / Out of Service

Event State: On Normal / Off Normal

Out of Service: False / True

Analogue Value instance 35

Description: Current setpoint

Name: Setpoint

Object Type: Analogue value

Present value: As set, see min max user setpoint. (20.0) (W)

COV increment: 1.0 (W)

Units: Degrees centigrade

Status flags: In Alarm / Fault / Overridden / Out of Service

Event State: On Normal / Off Normal

Out of Service: False / True

Analogue Value instance 36

Description: Minimum user setpoint

Name: Minimum setpoint

Object Type: Analogue value

Present value: As set, 5 to 15. (18) (W)

Units: Degrees centigrade

Status flags: In Alarm / Fault / Overridden / Out of Service

Event State: On Normal / Off Normal

Out of Service: False / True

Analogue Value instance 37

Description: Maximum user setpoint

Name: Maximum setpoint

Object Type: Analogue value

Present value: As set, 25 to 35. (28) (W)

Units: Degrees centigrade

© Copyright Annicom 2018. All Rights Reserved

Status flags: In Alarm / Fault / Overridden / Out of Service

Event State: On Normal / Off Normal

Out of Service: False / True

Analogue Value instance 38

Description: Setback

Name: Setback

Object Type: Analogue value

Present value: As set, 0 to 20. (5) (W)

Units: Degrees centigrade

Status flags: In Alarm / Fault / Overridden / Out of Service

Event State: On Normal / Off Normal

Out of Service: False / True

Analogue Value instance 39

Description: Room exit delay

Name: Room exit delay

Object Type: Analogue value

Present value: As set, 0 to 90. (50) (W)

Units: Minutes

Status flags: In Alarm / Fault / Overridden / Out of Service

Event State: On Normal / Off Normal

Out of Service: False / True

Analogue Value instance 40

Description: Current fan speed

This is a read out of the current fan speed. To set the fan speed use Manual fan speed.

Name. Actual fan speed

Object Type: Analogue value

Present value: As set, 1 to 10. (RO)

Units: None

Status flags: In Alarm / Fault / Overridden / Out of Service

Event State: On Normal / Off Normal

Out of Service: False / True

Analogue Value instance 41

Description: Deadband

Name: Deadband

Object Type: Analogue value

Present value: As set, 0.5 to 10. (5) (W)

Units: Degrees centigrade

Status flags: In Alarm / Fault / Overridden / Out of Service

Event State: On Normal / Off Normal

Out of Service: False / True

Analogue Value instance 42

Description: Manual fan speed

This sets the manual fan speed. The current fan speed may differ depending on the thermostat actions, read current fan speed to see actual speed.

Name. Manual fan speed

Object Type: Analogue value

Present value: As set, 0 to 10. (W)

0 = Auto fan speed

Units: None

Status flags: In Alarm / Fault / Overridden / Out of Service

Event State: On Normal / Off Normal

Out of Service: False / True

Analogue Value instance 103

Description: Device instance

Name. Device instance.

Object Type: Analogue value

© Copyright Annicom 2018. All Rights Reserved

Present value: 898000 (Default), 0 to 4194302. (W)

Status flags: In Alarm / Fault / Overridden / Out of Service

Event State: On Normal / Off Normal

Out of Service: False / True

Analogue Value instance 101

Description: Address

Name. Address.

Object Type: Analogue value

Present value: As set , 0 to 127. (16) (W)

Status flags: In Alarm / Fault / Overridden / Out of Service

Event State: On Normal / Off Normal

Out of Service: False / True

Analogue Value instance 102

Description: Maximum address

Name. Maximum address.

Object Type: Analogue value

Present value: As set, 1 to 127. (64) (W)

Status flags: In Alarm / Fault / Overridden / Out of Service

Event State: On Normal / Off Normal

Out of Service: False / True

Binary Input object properties

Binary input instance 104

Description: Card contact input

Name: Card input.

Object Type: Binary input

Present value: As set, Inactive / Active.

Inactive text: Not occupied

Active text: Occupied

Status flags: In Alarm / Fault / Overridden / Out of Service

Event State: On Normal / Off Normal

Out of Service: False / True

Binary input instance 105

Description: Window contact input

Name: Window input.

Object Type: Binary input

Present value: As set, Inactive / Active.

Inactive text: Window closed

Active text: Window open

Status flags: In Alarm / Fault / Overridden / Out of Service

Event State: On Normal / Off Normal

Out of Service: False / True

Binary Value object properties

Binary value instance 144

Description: Enable card contact input

Name: Card contact actions.

Object Type: Binary value

Present value: As set, 0 or 1. (0) (W)

Inactive text: 0 / Card input disabled

Active text: 1 / Card input enabled

Status flags: In Alarm / Fault / Overridden / Out of Service

Event State: On Normal / Off Normal

Out of Service: False / True

Binary value instance 145

Description: Enable window contact input

Name: Window contact actions.

Object Type: Binary value

Present value: As set, 0 or 1. (0) (W)

Inactive text: 0 / Window input disabled

© Copyright Annicom 2018. All Rights Reserved

Active text: 1 / Window input enabled

Status flags: In Alarm / Fault / Overridden / Out of Service

Event State: On Normal / Off Normal

Out of Service: False / True

Binary value instance 146

Description: Internal / external sensor selection

Name: Select sensor.

Object Type: Binary value

Present value: As set, 0 or 1. (0) (W)

Inactive text: 0 / Internal sensor

Active text: 1 / External sensor

Status flags: In Alarm / Fault / Overridden / Out of Service

Event State: On Normal / Off Normal

Out of Service: False / True

Binary value instance 147

Description: Enable/ disable setpoint switches

Name: Setpoint switch action.

Object Type: Binary value

Present value: As set, 0 or 1. (0) (W)

Inactive text: 0 / Enabled

Active text: 1 / Disabled

Status flags: In Alarm / Fault / Overridden / Out of Service

Event State: On Normal / Off Normal

Out of Service: False / True

Binary value instance 148

Description: Enable/ disable fanspeed switches

Name: Fanspeed switch action.

Object Type: Binary value

Present value: As set, 0 or 1. (0) (W)

Inactive text: 0 / Enabled

Active text: 1 / Disabled

Status flags: In Alarm / Fault / Overridden / Out of Service

Event State: On Normal / Off Normal

Out of Service: False / True

Binary value instance 149

Description: Enable/ disable on off switch

Name: On off switch action.

Object Type: Binary value

Present value: As set, 0 or 1. (0) (W)

Inactive text: 0 / Enabled

Active text: 1 / Disabled

Status flags: In Alarm / Fault / Overridden / Out of Service

Event State: On Normal / Off Normal

Out of Service: False / True

Binary value instance 150

Description: Unit on / off

Name: Unit on / off.

Object Type: Binary value

Present value: As set, 0 or 1. (W)

Inactive text: Unit off

Active text: Unit on

Status flags: In Alarm / Fault / Overridden / Out of Service

Event State: On Normal / Off Normal

Out of Service: False / True

Multistate Value object properties

Multi state value instance 184 (0-10V fanspeed version only)

Description: Fan steps

Name: Fan steps selection.

Object Type: Multi state value

© Copyright Annicom 2018. All Rights Reserved

Number of states: 2

Present value: As set, 1 or 2. (1) (W)

State 1 text: 3 steps

State 2 text: 10 steps

Status flags: In Alarm / Fault / Overridden / Out of Service

Event State: On Normal / Off Normal

Out of Service: False / True

Multi state value instance 185 (Default)(W)

Description: Operating mode

Name: Operating mode. (W)

Object Type: Multi state value

Number of states: 3

Present value: As set, 1 to 3. (3) (W)

State 1 text: Cool only

State 2 text: Heat only

State 3 text: Heating and cooling (Dual output H&C versions only)

Status flags: In Alarm / Fault / Overridden / Out of Service

Event State: On Normal / Off Normal

Out of Service: False / True

Multi state value instance 197 (Default)(W)

Description: MSTP baud rate

Name: MSTP baud rate. (W)

Object Type: Multi state value

Number of states: 6

Present value: As set, 1 to 5. (2) (W)

State 1 text: 19200

State 2 text: 38400

State 3 text: 57600

State 4 text: 76800

State 5 text: 115200

Status flags: In Alarm / Fault / Overridden / Out of Service

Event State: On Normal / Off Normal

Out of Service: False / True

© Copyright Annicom 2018. All Rights Reserved