ENGINEERING
TOMORROW

Data sheet

AB-QM 4.0 / AB-QM Pressure Independent Control Valves (PICV) DN 15-250

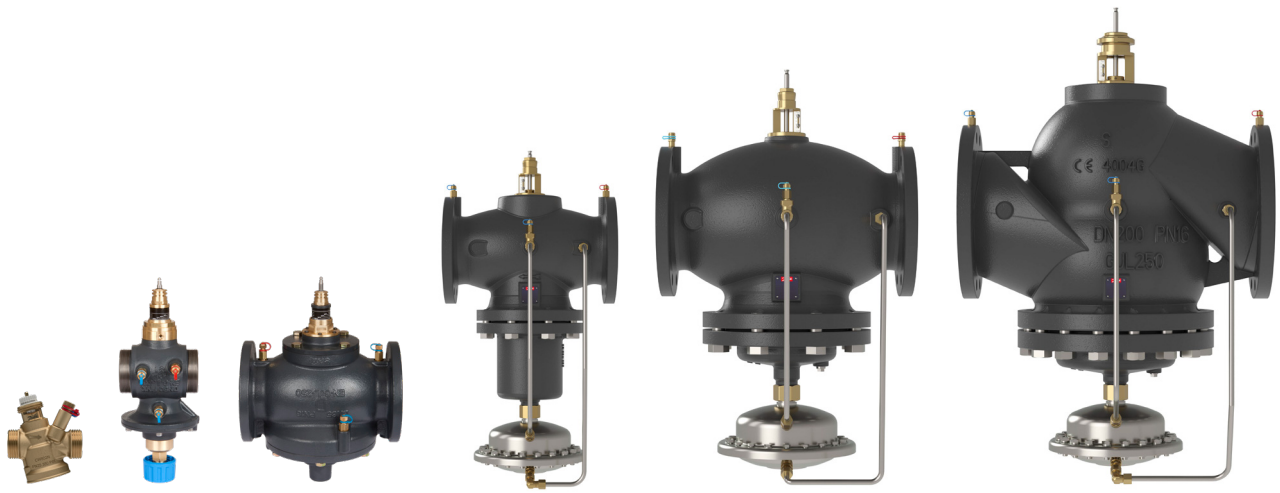

The AB-QM valve equipped with an actuator is a control valve with full authority and an automatic balancing function / flow limitation. Typical applications are: Temperature control with permanent automatic balancing on terminal units (chillers, air-handling units, fan coils, induction units, radiation panels and heat exchangers). Without an actuator is a flow limiter e.g for one-pipe systems.

Description

The Danfoss AB-QM is a Pressure Independent Control Valve (PICV) that combines high accuracy and durability with market leading user-friendliness. The design of the AB-QM is fully geared towards making your project run on time and on budget while delivering the most efficient HVAC system.
Pressure independent valves are control valves with an automatic balancing function. An in-built pressure controller keeps a constant differential pressure over the control valve, ensuring full authority and automatic flow limitation. By combining two functions in one, control and automatic hydronic balance, Danfoss PICVs provide a cost-efficient solution for the challenges faced by forward-looking designers of HVAC systems.

The Danfoss AB-QM delivers the lowest total cost of ownership because:

- Precise flow limitation ensures always the right flow at the right time, ensuring minimized pumping energy
- Full range from DN15 to DN250 for flows up to 407 m3/h
- Available with internal and external thread for universal applicability
- Danfoss' durability test ensures the AB-QM has best-in-class resistance to scaling and clogging
- Easy troubleshooting because of the always visible setting and the ability to measure flow through test plugs
- Minimum hysteresis for stable and precise temperature control
- Future-ready with a range of smart actuators, ready for data driven and optimized HVAC 4.0

Ordering

AB-QM 4.0 threaded version (with test plugs and without test plugs) - **External thread**

Type				With test plugs	Without test plugs
Picture	**DN**	**$Q_{nom.}$** (l/h)	**Ext. thread** (ISO 228/1)	**Code No.**	**Code No.**
	15 LF	200	G ¾A	**003Z8200**	**003Z8220**
	15	650		**003Z8201**	**003Z8221**
	15 HF	1,200		**003Z8202**	**003Z8222**
	20	1,100	G 1A	**003Z8203**	**003Z8223**
	20 HF	1,900		**003Z8204**	**003Z8224**

AB-QM threaded version (with test plugs and without test plugs) - **External thread**

Type				With test plugs	Without test plugs
Picture	**DN**	**$Q_{nom.}$** (l/h)	**Ext. thread** (ISO 228/1)	**Code No.**	**Code No.**
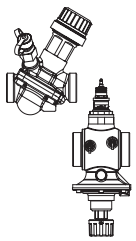	25	1,700	G 1 ¼A	**003Z1214**	**003Z1204**
	25HF	2,700		**-**	**003Z1224**
	32	3,200	G 1 ½A	**003Z1215**	**003Z1205**
	32 HF	4,000		**-**	**003Z1225**
	40	7,500	G 2 A	**003Z0770**	*
	50	12,500	G 2 ½ A	**003Z0771**	
	-				

** AB-QM DN 15-32 w/o TP can not be upgraded to version with TP*

AB-QM 4.0 threaded version (with test plugs and without test plugs) - **Internal thread**

Type				With test plugs	Without test plugs
Picture	**DN**	**$Q_{nom.}$** (l/h)	**Int. thread** (ISO 7/1)	**Code No.**	**Code No.**
	15 LF	200	Rp ½	**003Z8300**	**003Z8320**
	15	650		**003Z8301**	**003Z8321**
	15 HF	1,200		**003Z8302**	**003Z8322**
	20	1,100	Rp ¾	**003Z8303**	**003Z8323**
	20 HF	1,900		**003Z8304**	**003Z8324**

AB-QM flanged version

Picture	**DN**	**$Q_{nom.}$** (l/h)	**Flange connection** (EN 1092-1)	**Code No.**
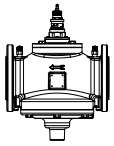	50	12,500	PN 16	**003Z0772**
	65	20,000		**003Z0773**
	65 HF	25,000		**003Z0793**
	80	28,000		**003Z0774**
	80 HF	40,000		**003Z0794**
	100	38,000		**003Z0775**
	100 HF	59,000		**003Z0795**
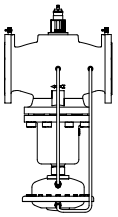	125	90,000		**003Z0705**
	125 HF	110,000		**003Z0715**
	150	145,000		**003Z0706**
	150 HF	190,000		**003Z0716**
	200	200,000		**003Z0707**
	200 HF	270,000		**003Z0717**
	250	300,000		**003Z0708**
	250 HF	370,000		**003Z0718**

© Danfoss | 2022.03

Ordering *(continuous)*
Accessories & spare parts

Type	Comments		Code No.
	To pipe	To valve	
Union connection (CW617N) (1 pcs.)	R ½	DN 15	**003Z0232**
	R ¾	DN 20	**003Z0233**
	R 1	DN 25	**003Z0234**
	R 1 ¼	DN 32	**003Z0235**
	R 1½	DN 40	**003Z0279**
	R 2	DN 50	**003Z0278**
Tailpiece welding (W. Nr. 1.0308) (1 pcs.)	Weld.	DN 15	**003Z0226**
		DN 20	**003Z0227**
		DN 25	**003Z0228**
		DN 32	**003Z0229**
		DN 40	**003Z0270**
		DN 50	**003Z0276**
	Weld.	DN 15	**003Z1271**
		DN 20	**003Z1272**
		DN 25	**003Z1273**
		DN 32	**003Z1274**
		DN 40	**003Z1275**
		DN 50	**003Z1276**
Tailpieces for soldering (CW614N) (2 nuts, 2 gaskets, 2 soldering plugs	15×1 mm	DN 15	**065Z7017**
Handle AB-QM (necessary accessory if installing valve without actuator)		DN 40-100	**003Z0695**
		DN 125-150	**003Z0696**
		DN 200-250	**003Z0697**
Shut off accessories		DN15-32	**003Z0230**
Stem heater for AB-QM DN 40-100 / AME 435 QM			**065Z0315**
Stem heater for AB-QM DN 125, 150 / AME 55 QM / AME 655			**065Z7022**
Elbow test plug extension (1 pcs.)			**003Z3944**
Straight test plug extension (1 pcs.)			**003Z3945**
Straight plug extension set (1 pcs.)			**003Z3946**
AB-QM 4.0 DN15 EPP insulation			**003Z7810**
AB-QM 4.0 DN20 EPP insulation			**003Z7811**

Technical data

			AB-QM 4.0 (*threaded version*)					**AB-QM** (*threaded version*)					
Nominal diameter		**DN**	**15 LF**	**15**	**15 HF**	**20**	**20 HF**	**25**	**25 HF**	**32**	**32 HF**	**40**	**50**
Flow range	Q_{nom} (100 %)[1]	l/h	200	650	1.200	1.100	1.900	1.700	2.700	3.200	4.000	7.500	12.500
	Q_{high}[3]		200	650	1.200	1.100	1.900	1.870	2.970	3.520	4.400	7.500	12.500
Setting range [1), 2)]		%	10-100					20-110				40-100	
Diff. pressure [3), 4)]	Δp_{min}	kPa	16	16	25	16	25	20 (25)	35 (40)	25 (30)	35 (40)	30	
	Δp_{max}		600										
Pressure stage		PN	25					16					
Control range			1:1000										
Control valve's characteristic			Linear (could be converted by actuator to equal percentage)										
Leakage rate with recommended actuators			IEC 60534-4:2007 class IV					IEC 60534-4:2007 class III					
For shut off function			Acc. to ISO 5208 class A - no visible leakage										
Flow medium			Water and water mixture for closed heating and cooling systems according to plant type I for DIN WN 14868. When used in Plant type II for DIN EN 14868 appropriate protective measures are taken. The requirements of VDI 2035, part 1+2 are observed										
Medium temperature		°C	-10 … +95					(-10*) + 2 … 120					
Storage and transport temp.			-40 … +70										
Stroke		mm	4					4.5				10	
Connection	ext. thread (ISO 228/1)		G ¾ A			G 1 A		G 1¼ A		G 1½ A		G 2 A	G 2 ½ A
	int. thread (ISO 7/1)		Rp ½	Rp ½	Rp ½	Rp ¾	Rp ¾	-					
	actuator		M30 x 1.5									Danfoss standard	
Materials and medium													
Materials in the medium	Valve bodies		DZR Brass									Grey iron EN-GJL-250 (GG25)	
	Membranes and O-rings		EPDM										
	Shutter guide		PPSU					N/A					
	Shutter		DZR Brass					-					
	Springs		W.Nr.1.4310					W.Nr.1.4310, W.Nr. 1.4568					
	Spring support		PPSU					-					
	Cone (Pc)		-					W.Nr. 1.4305				CW 614N, W.Nr.1.4305	
	Cone (Cv)		PPSU					CW 614N					
	Seat (Pc)		-					EPDM				W.Nr. 1.4305	
	Seat (Cv)		DZR Brass									W.Nr. 1.4305	
	Screw		-					Stainless steel A2					
Materials out of medium	Plastic parts		ABS					PA				POM	
	Insert parts and outer screws		-					CW 614N, W.Nr. 1.4310, W.Nr. 1.4401					

[1)] Factory setting of the valve is done at nominal setting range.
[2)] Regardless of the setting, the valve can modulate below 1 % of set flow.
[3)] When set above 100 %, minimum starting pressure needed is higher, see figures in the ().
[4)] At min differential pressure valve reaches at least 90% of nominal flow. Declaration of performance is available upon request.
[*)] If the medium temperature when using AB-QM DN 15-32 is below 2 °C, than ice forming on the spindle must be prevented, there fore valve and actuator should be insulated.
For AB-QM DN40-100 stem heaters must be used: Code 065B2171, 065Z0315 or 065Z7022.

According suitability and usage especially in not oxygen tight systems please mind the instructions given by the coolant producer.

Pc - pressure controller part
Cv - Control valve part

© Danfoss | 2022.03

Technical data *(continuous)*

AB-QM (flanged version)

Nominal diameter		DN	50	65	65 HF	80	80 HF	100	100 HF
Flow range	Q_{nom} (100 %) [1]	l/h	12,500	20,000	25,000	28,000	40,000	38,000	59,000
	Q_{high}		12,500	20,000	25,000	28,000	40,000	38,000	59,000
Setting range [1), 2)]		%	40-100						
Diff. pressure [3), 5)]	Δp_{min}	kPa	30		60	30	60	30	60
	Δp_{max}		600						
Pressure stage		PN	16						
Control range			Acc. to standard IEC 534 control range is high as Cv characteristic is linear. (1:1000)						
Control valve's characteristic			Linear (could be converted by actuator to equal percentage)						
Leakage rate with recommended actuators			max. 0.05 % of Q_{nom}						
For shut off function			Acc. to ISO 5208 class A - no visible leakage						
Flow medium			Water and water mixture for closed heating and cooling systems according to plant type I for DIN EN 14868. When used in plant Type II for DIN EN 14868 appropriate protective measures are taken. The requirements of VDI 2035, part 1 + 2 are observed.						
Medium temperature		°C	–10 ... +120						
Storage and transport temp.			–40 … 70						
Stroke		mm	10	15					
Connection	flange		PN 16						
	actuator		Danfoss standard						
Materials in the water									
Valve bodies			Grey iron EN-GJL-250 (GG25)						
Membranes/ Bellow			EPDM						
O-rings			EPDM						
Springs			W.Nr. 1.4568, W.Nr. 1.4310						
Cone (Pc)			CuZn40Pb3 - CW 614N, W.Nr. 1.4305						
Seat (Pc)			W.Nr. 1.4305						
Cone (Cv)			CuZn40Pb3 - CW 614N						
Seat (Cv)			W.Nr. 1.4305						
Screw			Stainless Steel (A2)						
Flat gasket			NBR						

Nominal diameter		DN	125	125 HF	150	150 HF	200	200 HF	250	250 HF
Flow range	Q_{nom} (100 %) [1]	l/h	90,000	110,000	145,000	190,000	200,000	270,000	300,000	370,000
	Q_{high} [3]		100,000	120,000	160,000	209,000	220,000	300,000	330,000	407,000
Setting range [2]		%	40-110							
Diff. pressure [3), 4), 5)]	Δp_{min}	kPa	40 (60)	60 (80)	40 (60)	60 (80)	45 (65)	60 (80)	45 (65)	60 (80)
	Δp_{max}		600	600	600	600	600	600	600	600
Pressure stage		PN	16							
Control range			1:1000							
Control valve's characteristic			Linear (could be converted by actuator to equal percentage)							
Leakage rate with recommended actuators			max.0.01 % of Q_{nom}							
Flow medium			Water and water mixture for closed heating and cooling systems according to plant type I for DIN EN 14868. When used in plant Type II for DIN EN 14868 appropriate protective measures are taken. The requirements of VDI 2035, part 1 + 2 are observed.							
Medium temperature		°C	–10 ... +120							
Storage and transport temp.			–40 … 70							
Stroke		mm	30							
Connection	flange		PN 16							
	actuator		Danfoss standard							
Materials in the water										
Valve bodies			Grey iron EN-GJL-250 (GG 25)							
Membranes/ Bellow			W.Nr.1.4571	EPDM						
O-rings			EPDM							
Springs			W.Nr.1.4401	W.Nr.1.4310						
Cone (Pc)			W.Nr.1.4404NC	W.Nr.1.4021						
Seat (Pc)			W.Nr.1.4027							
Cone (Cv)			W.Nr.1.4404NC	W.Nr.1.4021						
Seat (Cv)			W.Nr.1.4027							
Screw			W.Nr.1.1181							
Flat gasket			Graphite gasket	Non asbestos						

[1] *Factory setting of the valve is done at nominal setting range.*
[2] *Regardless of the setting, the valve can modulate below 1 % of set flow.*
[3] *When set above 100 %, minimum starting pressure needed is higher, see figures in the ().*
[4] *In case AB-QM is used above 400 kPa differential pressure contact Danfoss design center to assure proper design.*
[5] *At min differential pressure valve reaches at least 90% of nominal flow. Declaration of performance is available upon request.*

Pc - pressure controller part
Cv - Control valve part

Actuators overview AB-QM DN 15-32

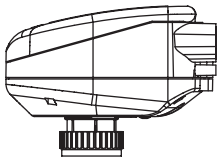

NovoCon® S

NovoCon® S is a high accuracy multi-functional field bus actuator, specifically designed for use in combination with the Pressure Independent Balancing Control Valve type AB-QM in sizes from DN 15 LF-32 HF. The actuator with AB-QM is used to control water supply to fan coil units, chilled beams, induction units, small re-heaters, re-coolers, AHU's and other terminal units for zone control, in which heating/ chilled water is the controlled medium.

Type	Speed	Power supply	Control signal	Communication protocol	Enclosure	Code No.
NovoCon® S	3/6/12/24 s/mm	24 V ac/dc	0-10 V, 2-10V, 0-20mA, 4-20mA	BACnet MS/TP, Modbus RTU	IP 54 (IP40 if mounted upside down)	**003Z8504**

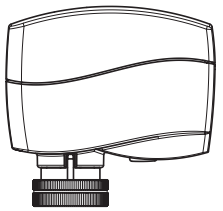

AME(V) 110/120 NL

The AME 110 and 120 are high precision modulating gear actuators that can be mounted on the AB-QM for precise control. They have a calibration function so the travel of the actuator always matches the stroke of the AB-QM perfectly. The actuator is suitable for both linear and logarithmic characteristics. The AME(V) 110/120 fits to AB-QM DN 15 LF to DN 32 HF.

Type	Speed	Feedback signal	Power supply	Control signal	Enclosure	Code No.
AMV 110 NL	24 s/mm	No	24 V ac	3 point	IP 42	**082H8056**
AMV 110 NL	24 s/mm	No				**082H8058**
AME 110 NLX	24 s/mm	Yes				**082H8060**
AME 120 NL	12 s/mm	No		0-10 V, 2-10V, 0-20mA, 4-20mA		**082H8057**
AME 120 NL	12 s/mm	No				**082H8059**

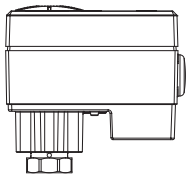

AME 13 SU/SD

The AME 13 is a precision gear actuator that has a built-in spring that will close the valve (Spring Down, SD) or open the valve (Spring Up, SU) if the power on the actuator is lost. The characteristic can be set to Logarithmic or Linear with a dip switch. The AME 13 SU/SD fits to AB-QM DN 15 LF to DN 32 HF.

Type	Speed	Spring	Power supply	Control signal	Feedback signal	Enclosure	Code No.
AME 13 SU-1	14 s/mm	Spring to open	24 V ac	0-10 V, 2-10V, 0-20mA, 4-20mA	0-10 V, 2-10V	IP 54	**082H5006**
AME 13 SD-1		Spring to close					**082H5007**

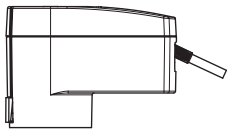

AME 113

The AME 113 are modulated controlled gear actuators that has a build in battery operated function that opens or closes the valve if the power on the actuator is lost. The AME 113 has a logarithmic characteristic. They have a calibration function so the travel of the actuator always matches the stroke of the AB-QM valve. The AME 113 fits to AB-QM DN 15 LF to DN 32 HF.

Type	Speed	Safety function	Power supply	Control signal	Feedback signal	Enclosure	Code No.
AME 113 NL SD	15 s/mm	Closes the valve	24 V ac/dc	0-10 V	-	IP 54	**082H5007M**
AME 113 NL SU		Opens the valve					**082H5008**
AME 113 NLX SD		Closes the valve			0-10 V		**082H5000**
AME 113 NLX SU		Opens the valve					**082H5001**

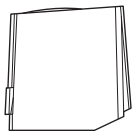

ABNM-A5

The ABNM is a thermal modulating actuator. It can be used to modulate the AB-QM if speed or precision is not the first concern. ABNM has either a Logarithmic (LOG) or a Linear (LIN) characteristic which should be chosen to fit the application. It is available in Normally Open (NO) and Normally Closed (NC) versions, as well as in 24V DC and AC . The ABNM-A5 fits to AB-QM DN 15 LF to DN 32 HF.

Type	NO/NC	LOG/LIN	Supply voltage	Stroke	Full stroke time	Enclosure	Code No.
ABNM-A5	NC	LOG	24 V ac	5 mm	3-5 min	IP 54	**082F1160**
ABNM-A5	NC	LIN		5 mm			**082F1161**
ABNM-A5	NC	LOG		6.5 mm			**082F1162**
ABNM-A5	NO	LOG		6.5 mm			**082F1163**
ABNM-A5	NC	LIN		6.5 mm			**082F1164**
ABNM-A5	NO	LIN		6.5 mm			**082F1165**
ABNM-A5	NC	LOG	24 V dc	6.5 mm			**082F1166**
ABNM-A5	NO	LOG		6.5 mm			**082F1167**

Cables	Code No.
1 meter	**082F1081**
5 meter	**082F1082**
10 meter	**082F1083**

Note: ABN & ABNM A5 with 5mm stroke are only able to open AB-QM DN 25-32 90%.

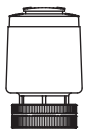

TWA-Q

TWA-Q is a thermal actuator that is used for On/Off applications, where control precision and speed are not prioritized. It is available in Normally Open (NO) and Normally Closed (NC) versions and in 24 and 230 Volt. TWA-Q has a position indicator to show if it is open or closed. The TWA-Q fits to AB-QM DN 15 LF to DN 32 HF.

Type	NC/NO	Voltage	Stroke	Full stroke time [1)]	Enclosure	Code No.
TWA-Q	NC	230V AC	5 mm	<3 min.	IP 54	**082F1600**
TWA-Q	NO	230V AC	5 mm			**082F1601**
TWA-Q	NC	24V AC/DC	5 mm			**082F1602**
TWA-Q	NO	24V AC/DC	5 mm			**082F1603**

[1)] at room temperature.

© Danfoss | 2022.03

Actuators overview AB-QM DN 40-100

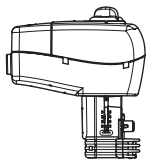

NovoCon® M

NovoCon® M is a high accuracy multi-functional field bus actuator, specifically designed for use in combination with the NovoCon Pressure Independent Balancing Control Valve type NovoCon AB-QM in sizes from
DN 40-100, please see separate data sheet. The NovoCon® M actuator with AB-QM is used in air handling units AHU, chillers and distribution station applications.

Type	Speed	Power supply	Control signal	Communication protocol	Enclosure	Code No.
NovoCon® M	3/6/12/24 s/mm	24 V ac/dc	0-10 V, 2-10V, 0-20mA, 4-20mA	BACnet MS/TP, Modbus RTU	IP 54	**003Z8540**

AME 435 QM

The AME 435 QM is a high precision modulating gear actuator that can be mounted on the AB-QM for precise control. It has a calibration function, so the travel of the actuator always matches the stroke of the AB-QM perfectly. The actuator is suitable for both linear and logarithmic characteristics. The AME 435 QM fits to AB-QM DN 40 to DN 100 HF.

Type	Speed	Power supply	Control signal	Feedback signal	Enclosure	Code No.
AME 435 QM	7.5/15 s/mm	24 V ac/dc	0-10 V, 2-10V, 0-20mA, 4-20mA	0-10 V, 2-10V	IP 54	**082H0171**

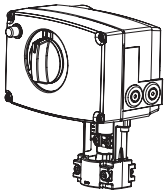

AME 25 SU/SD

The AME 25 SU/SD is a precision gear actuator that has a built-in spring that will close the valve (Spring Down, SD) or open the valve (Spring Up, SU) if the power on the actuator is lost. The characteristic can be set to Logarithmic or Linear with a dip switch. The AME 25 SU/SD fits to AB-QM DN 40 to DN 100 HF.

Type	Speed	Power supply	Control signal	Feedback signal	Enclosure	Code No.
AME 25 SD	15 s/mm	24 V ac	0-10 V, 2-10V, 0-20mA, 4-20mA	0-10 V, 2-10V	IP 54	**082H3038**
AME 25 SU						**082H3041**

*Please consider adapter is needed **003Z0694***

Actuators overview AB-QM DN 125-150

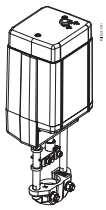

AME 55 QM

AME 55 QM and AME 655-1 actuators are used with pressure independent balancing and control valve typeAB-QM DN 125 and DN 150.

Type	Speed	Power supply	Control signal	Feedback signal	Enclosure	Code No.
AME 55 QM	8 s/mm	24 V ac	0-10 V, 2-10V, 0-20mA, 4-20mA	0-10 V, 2-10V	IP 54	**082H3078**

AME 655-1

Type	Speed	Power supply	Control signal	Feedback signal	Enclosure	Code No.
AME 655-1	2/6 s/mm	24 V ac/dc	0-10 V, 2-10V, 0-20mA, 4-20mA	0-10 V, 2-10V, 0-20mA, 4-20mA	IP 54	**082H5010**

AME 658 SU/SD-1

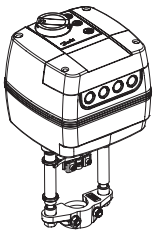

AME 658 SU/SD-1 actuator is used together with pressure independent balancing and control valves type AB-QM DN 125 and DN 150. The AME 658 SU/SU-1 is a precision gear actuator that has a built-in spring that will close the valve (Spring Down, SD) or open the valve (Spring Up, SU) if the power on the actuator is lost. The characteristic can be set to Logarithmic or Linear with a dip switch.

Type	Speed	Power supply	Control signal	Feedback signal	Enclosure	Code No.
AME 658 SU-1	4/6 s/mm	24 V ac/dc	0-10 V, 2-10V, 0-20mA, 4-20mA	0-10 V, 2-10V, 0-20mA, 4-20mA	IP 54	**082H5012**
AME 658 SD-1						**082H5011**

All actuators type "-1" are UL certified.

NovoCon® L

NovoCon® L is a high accuracy multi-functional fieldbus actuator, specifically designed for use in combination with the Pressure Independent Control Valve type AB-QM in sizes from DN 125-150 used in air handling units AHU, chillers and distribution station applications. NovoCon® L SU/SD has a built-in a spring that will close the valve (Spring Down, SD) or open the valve (Spring Up, SU) if the power on the actuator is lost.

Type	Speed	Power supply	Control signal	Communication protocol	Enclosure	Code No.
NovoCon® L	3/6/12/24 s/mm	24 V ac/dc	0-10 V, 2-10V, 0-20mA, 4-20mA	BACnet MS/TP, Modbus RTU	IP 54	**003Z8560**
NovoCon® L SU						**003Z8561**
NovoCon® L SD						**003Z8562**

Actuators overview AB-QM DN 200-250

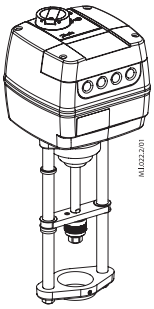

AME 685-1

AME 685-1 are used together with large pressure independent balancing and control valves type AB-QM DN 200 and DN 250.

Type	Speed	Power supply	Control signal	Feedback signal	Enclosure	Code No.
AME 685-1	3/6 s/mm	24 V ac/dc	0-10 V, 2-10V, 0-20mA, 4-20mA	0-10 V, 2-10V, 0-20mA, 4-20mA	IP 54	**003Z8563**

NovoCon® XL

NovoCon® XL is a high accuracy multi-functional fieldbus actuator, specifically designed for use in combination with the Pressure Independent Control Valve type AB-QM in sizes from DN 200- 250 used in air handling units AHU, chillers and distribution station applications.

Type	Speed	Power supply	Control signal	Communication protocol	Enclosure	Code No.
NovoCon® XL	3/6/12/24 s/mm	24 V ac/dc	0-10 V, 2-10V, 0-20mA, 4-20mA	BACnet MS/TP, Modbus RTU	IP 54	**003Z8563**

In case other types of actuators are needed please contact our local sales representative.

Presetting

DN 15-32

The calculated flow can be adjusted easily without using special tools.
The change of presetting (factory setting is 100% (10) follow steps below:

1. Remove the blue protective cap or the mounted actuator
2. Raise the pointer (DN 25-32)
3. Turn the pointer (clockwise to decrease) to the new setting
4. Press pointer back into lock position (DN 25-32) the presetting scale indicates values from 100% flow to 0% (DN 25-32) and 10-0 (DN 15-20). Clockwise turning would decrease the flow value while counter clock wise would increase it.

DN 15 - 32

DN 15, 20

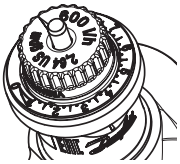

0 - 10

DN 25, 32

0 - 100 %

DN 40 - 100

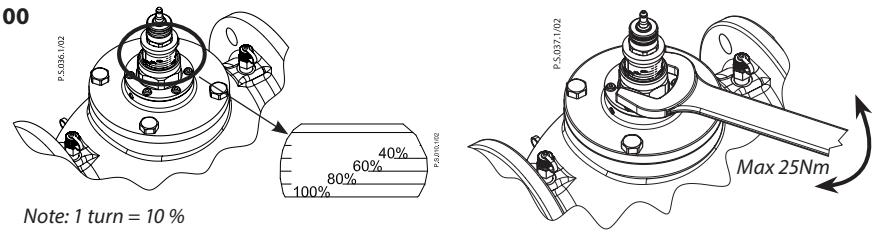

Note: 1 turn = 10 %

DN 125-250

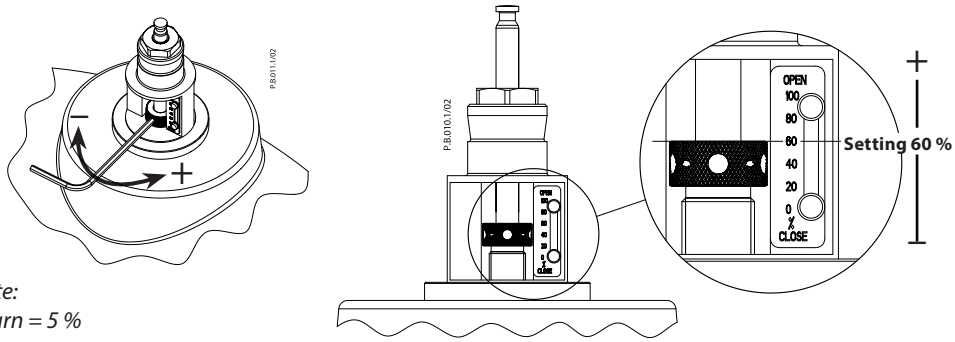

Note:
1 turn = 5 %

© Danfoss | 2022.03

Service

DN 15-32
For the service shut off function, it is recommended to install the valve in the supply water pipe.

DN 40-100
For the service shut-off function, the valve can be installed in either supply or return pipe.

Valves are equipped with manual shut-off for isolating function up to 16 bar.

DN 125-250
For the service shut-off function, the valve can be installed in either supply or return pipe.

For shut-off set the valve to 0%.

Tender text

A pressure independent balancing and control valve with a linear control characteristic that is independent of the available pressure and setting. Make: Danfoss AB-QM or equivalent.

The pressure independent valve should have the following features:

- Automatic flow limitation function
- Membrane driven design for reduced clogging risk
- Modulating below 1% of set flow, regardless of the setting
- Maximum flow clearly marked on the valve
- Authority of 1 at all settings
- Ability to close against 16 Bar of differential pressure.
- Linear control characteristic
- Linear setting
- Control ratio 1:1000
- Test plugs for pump optimization and flow verification for DN 15-250. Available in the range from DN 10 – 250 from one supplier.
- Option to change the characteristic from linear to equal percentage at all sizes by adjusting actuator settings.
- Leakage rate of no visible leakage (IEC 60534-4:2007 class IV) for DN 15 - DN 20 in combination with recommended actuator
- Leakage of 0.05 % of the Q_{nom} for DN 25 - DN 100 (IEC 60534-4:2007 class III) in combination with recommended actuator
- Leakage of 0.01 % of the Q_{nom} for DN 125 - DN 250 (IEC 60534-4:2007 class IV) in combination with recommended actuator
- Flow measurements (AB-QM DN 15, 20) according to BS7350:1990

Insulation

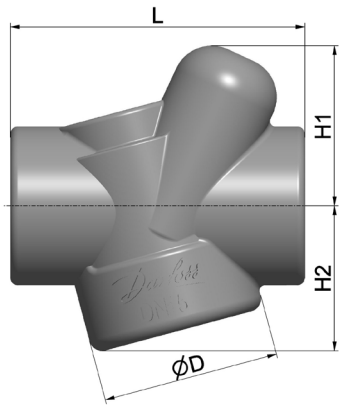

DN	L	H_1	H_2	D	Fire class
	mm				
15	113	62	56	68	E (EN 13501-1), B2 (DIN 4102)
20	120	62	60	75	

Dimensions

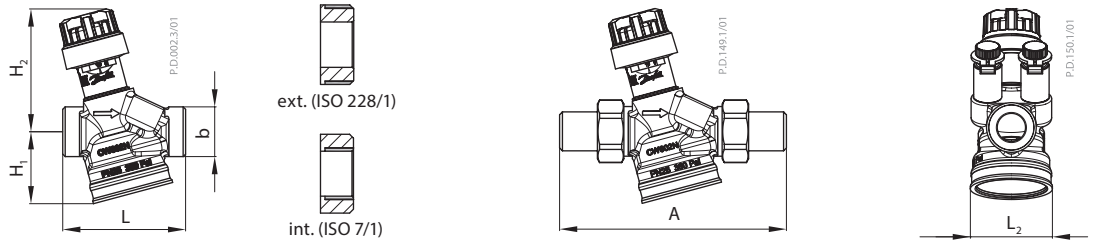

DN	Length				Height		Threaded	Welded	L_2 (mm)
	external		internal		H_1	H_2	A		
	L (mm)	**b**	**L** (mm)	**b**	(mm)				
15	65	G ¾A	75	Rp ½	38.2	65.2	120	139	42.6
20	82	G 1A	85	Rp ¾	43.9	67.2	143	166	49.4

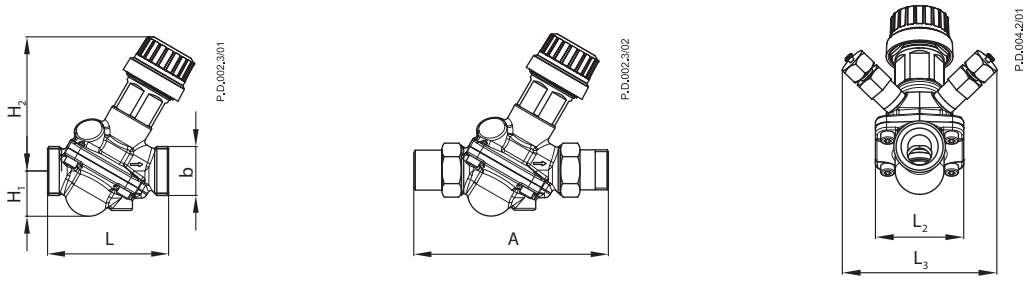

DN	Length		Height		Threaded	Welded	L_2	L_3
	L (mm)	b	H_1	H_2	A			
			(mm)				(mm)	
25	104	G 1 ¼	39.2	82.6	174	188	71	79
32	130	G 1 ½	48.7	93.8	207	214	90	79

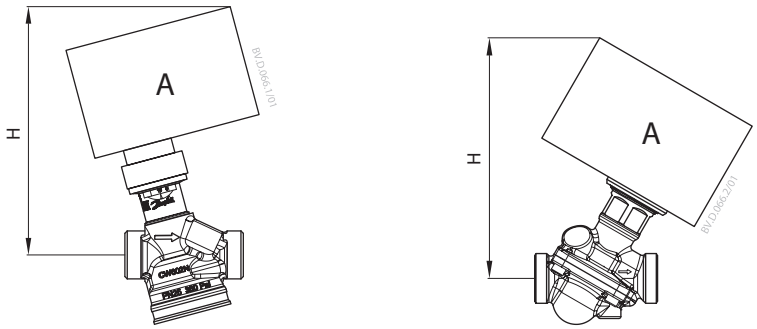

DN 15, 20 DN 25, 32

DN	TWA-Q	ABNM A5	AME/AMV 110NL, 120 NL, AMI 140	NovoCon S	AME 13 SU	Valve weight (kg)	
	H (mm)					external	internal
15	110.8	97.8	131.3	130.1	210.7	0.56	0.59
20	112	99	132.5	131.3	212.1	0.75	0.73
25	117	124	155	153	233.9	1.45	
32	128	136	166	164	245	2.21	

 © Danfoss | 2022.03

Dimensions *(continuous)*

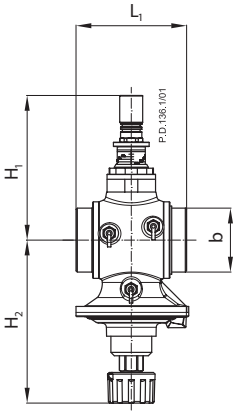

AB-QM DN 40, 50

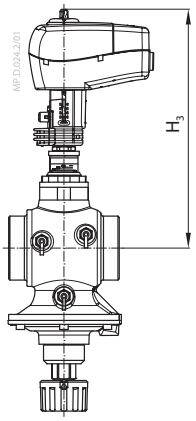

AB-QM + AME 435 QM

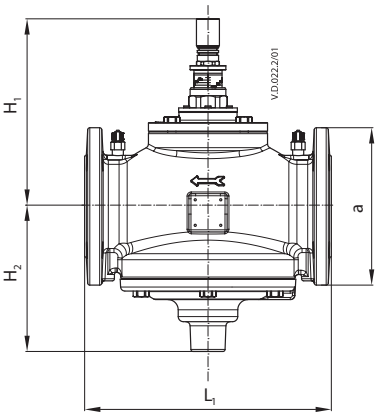

AB-QM DN 50-100

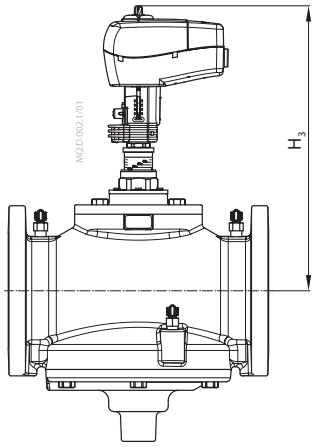

AB-QM + AME 435 QM

DN	L_1	H_1	H_2	H_3	b (ISO 228/1)	Weight kg
	mm					
40	110	170	174	280	G 2	6.9
50	130	170	174	280	G 2 ½	7.8

DN	L_1	H_1	H_2	H_3	a (EN 1092-2)	Weight (kg)
	mm					
50	230	170	174	280	165	14.2
65	290	220	172	330	185	38.0
80	310	225	177	335	200	45.0
100	350	240	187	350	220	57.0

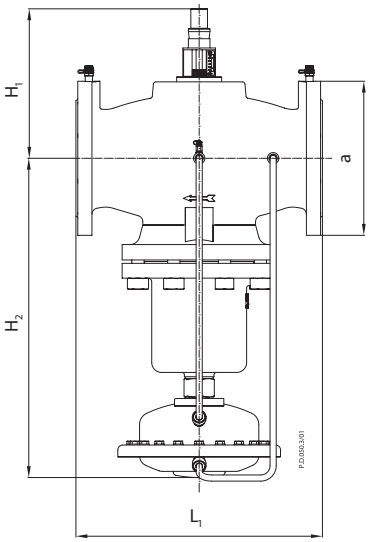

AB-QM DN 125

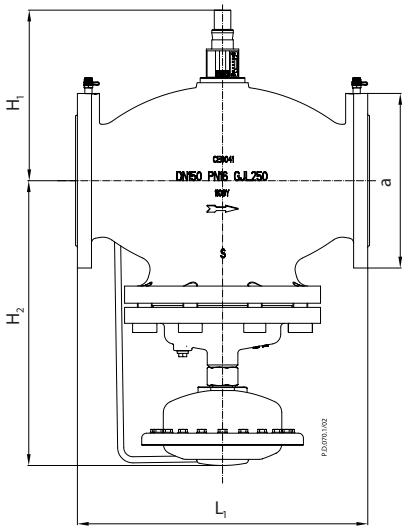

AB-QM DN 150

DN	L_1	H_1	H_2	a (EN 1092-2)	Weight (kg)
	mm				
125	400	234	532	250	85.3
150	480	308	465	285	138

Dimensions *(continuous)*

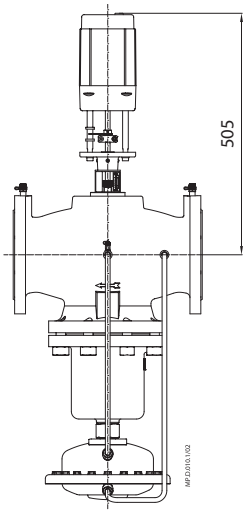

AB-QM DN 125 + AME 55 QM

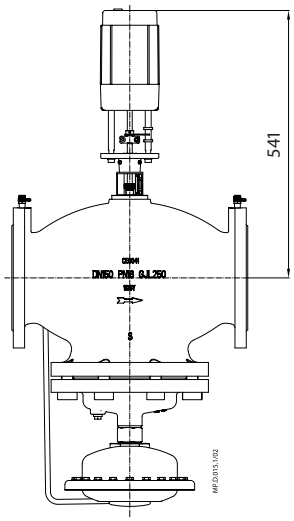

AB-QM DN 150 + AME 55 QM

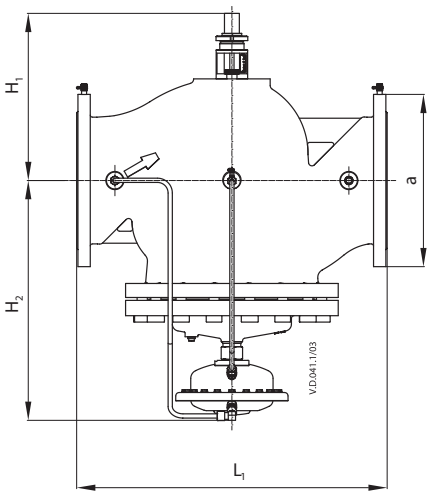

AB-QM DN 200, 250

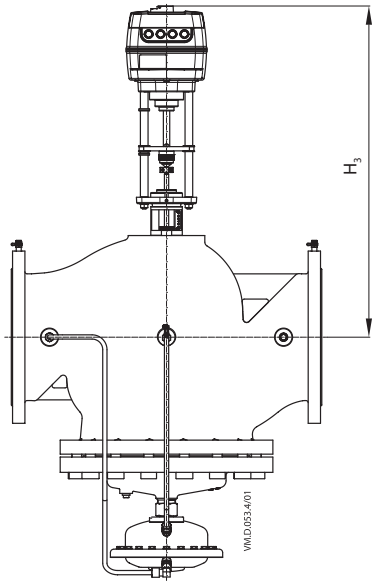

AB-QM DN 200, 250 + AME 685-1 & NovoCon XL

Type	L_1	H_1	H_2	H_3	a (EN 1092-2)	Weight (kg)
	mm					
DN 200	600	434	483	784	340	219
DN 250	730	430	533	789	405	342

Danfoss A/S
Climate Solutions • danfoss.com • +45 7488 2222

Any information, including, but not limited to information on selection of product, its application or use, product design, weight, dimensions, capacity or any other technical data in product manuals, catalogues descriptions, advertisements, etc. and whether made available in writing, orally, electronically, online or via download, shall be considered informative, and is only binding if and to the extent, explicit reference is made in a quotation or order confirmation. Danfoss cannot accept any responsibility for possible errors in catalogues, brochures, videos and other material.
Danfoss reserves the right to alter its products without notice. This also applies to products ordered but not delivered provided that such alterations can be made without changes to form, fit or function of the product.
All trademarks in this material are property of Danfoss A/S or Danfoss group companies. Danfoss and the Danfoss logo are trademarks of Danfoss A/S. All rights reserved.