Rotary actuator for
2 and 3-way ball valves

- **Torque 10 Nm**
- **Nominal voltage AC 230 V**
- **Control: Open/close or 3-point**

Technical data

Electrical data	Nominal voltage	AC 230 V, 50 Hz
	Power supply range	AC 198 ... 264 V
	Power consumption In operation For wire sizing	3.5 W at nominal torque 3.5 VA
	Connection	Cable 1 m, 3 x 0,75 mm^2
	Parallel connection	No
Functional data	Torque (nominal torque)	Min. 10 Nm at nominal voltage
	Position accuracy	±5%
	Manual override	Temporary and permanent disengagement of the gearing latch by means of the rotary knob on the housing
	Running time	140 s / 90°∢
	Sound power level	Max. 35 dB (A)
	Position indication	Scale plate 0 ... 1
Safety	Protection class	**II** Totally insulated ⧈
	Degree of protection	IP40
	EMC Low voltage direction	CE according to 89/336/EEC CE according to 73/23/EEC
	Mode of operation	Type 1.B (to EN 60730-1)
	Rated impulse voltage	4 kV (to EN 60730-1)
	Control pollution degree	3 (to EN 60730-1)
	Ambient temperature range	0 ... +50°C (Duty cycle 140/35 s)
	Media temperature	+5 ... +120°C (in ball valve)
	Non-operating temperature	–30 ... +80°C
	Ambient humidity range	95% r.H., non-condensating (to EN 60730-1)
	Maintenance	Maintenance-free
Dimensions / Weight	Dimensions	See «Dimensions» on page 2
	Weight	Approx. 500 g (without ball valve)

Safety notes

⚠

- **The actuator has been designed for use in stationary heating, ventilation and air conditioning systems and is not allowed to be used outside the specified field of application, especially in aircraft or in any other airborne means of transport.**
- **Caution: Power supply voltage!**
- **It may only be installed by suitably trained personnel.**
  All applicable legal or institutional installation regulations must be complied with.
- **The actuator must be protected against moistness. It is not suitable for use in outdoor applications.**
- **Check that the strain relief of the cable in the actuator housing functions correctly.**
- **The installer has to check the right functioning after mounting.**
- **The device does not contain any parts that can be replaced or repaired by the user.**
- **The device contains electrical and electronic components and is not allowed to be disposed of as household refuse. All locally valid regulations and requirements must be observed.**

Product features

Simple direct mounting Straightforward direct mounting on the ball valve with only one screw. The mounting position in relation to the mixing valve can be selected in 90° ∢ steps.

Manual operation Manual operation possible by lever (temporary disengagement of the gearing latch by pressing, permanent disengagement by means of the rotary knob on the housing).

Functional reliability The actuator switches off automatically when the end stops are reached.

Combination valve actuators Refer to the valve documentation for suitable valves, their permitted media temperatures and closing pressures.

Accessories

	Description	Data sheet
Electrical accessories	Auxiliary switch, Type SNR	T5 - Z-NR..

Electrical installation

Wiring diagrams

Note
Caution: Power supply voltage!

Open-close control

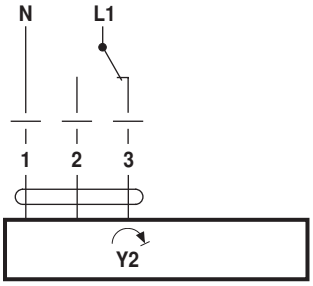

Cable colours:
1 = blue
2 = brown
3 = white

Rotary actuator		Rotary valve
Y2	↷	A – AB = 0%

3-point control

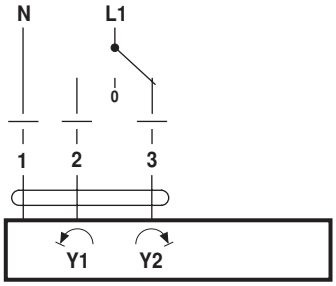

Dimensions [mm]

Dimensional diagrams

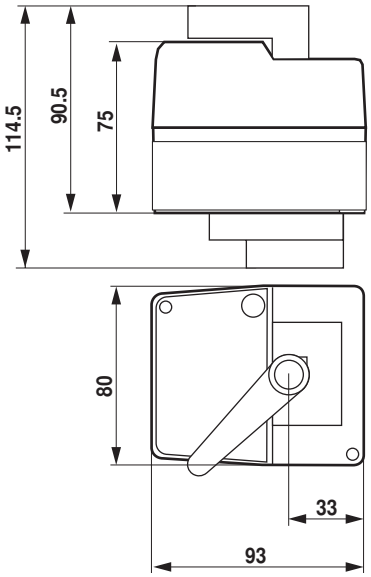

Further documentations

- Complete overview of actuators for water solutions
- Data sheets for ball valves
- Installation instructions for actuators and/or ball valves
- Notes for project planning (hydraulic characteristic curves and circuits, installation regulations, commissioning, maintenance etc.)

70721-00001.B

1

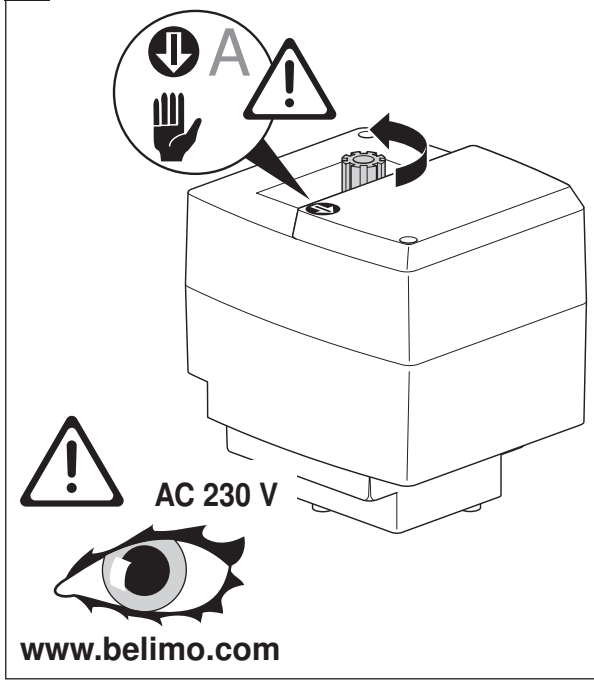

2

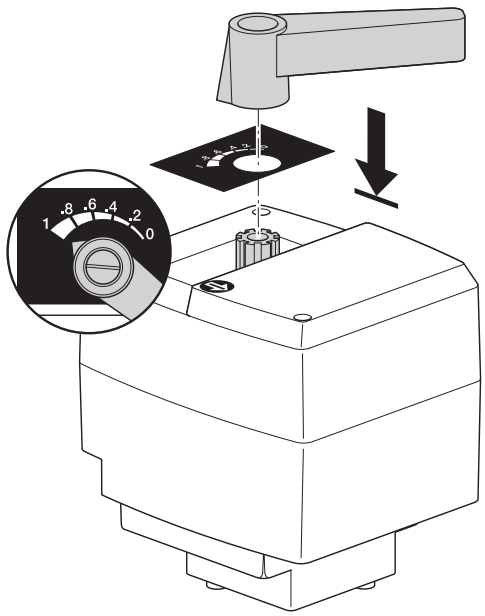

3

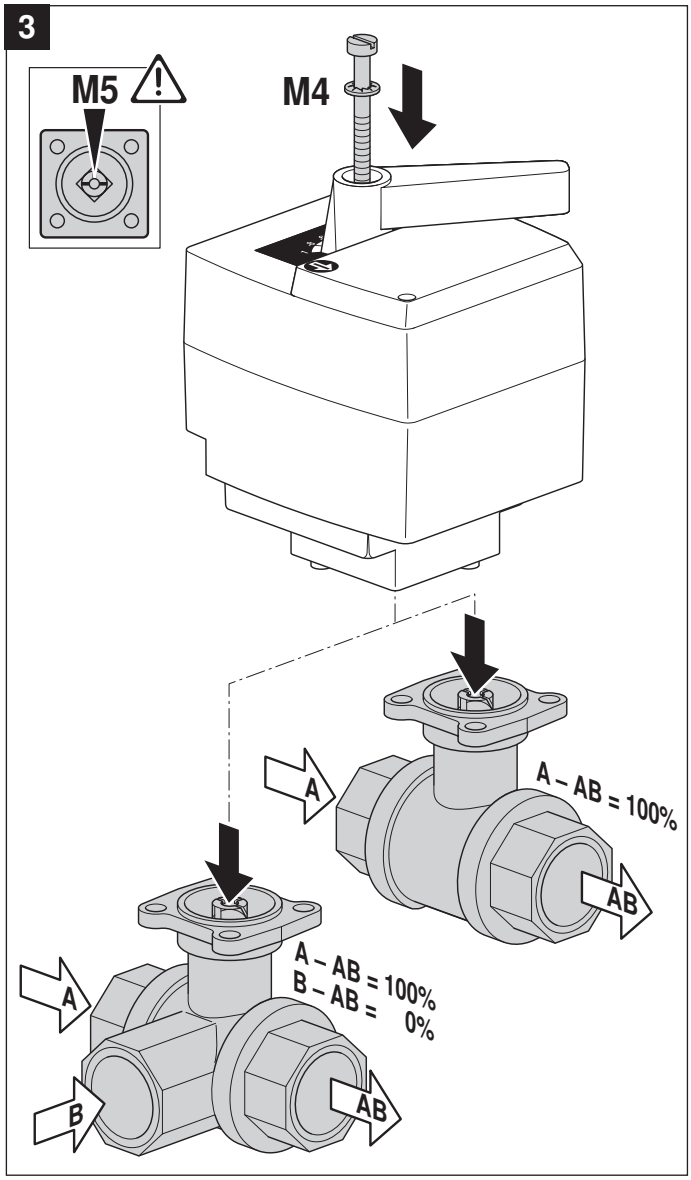

4

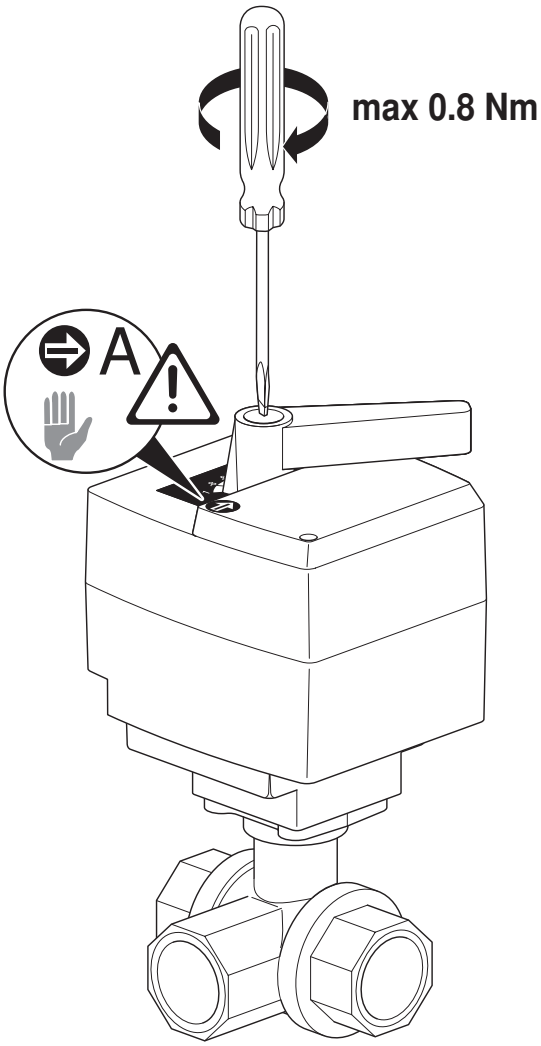

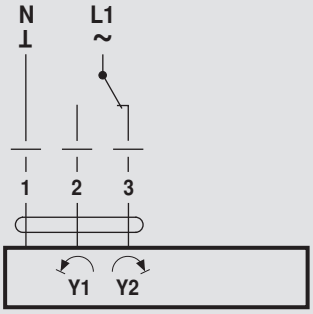

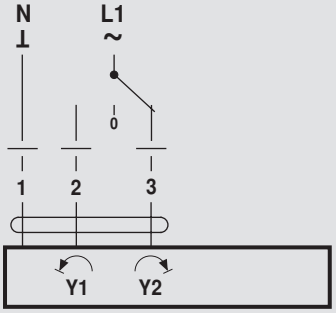

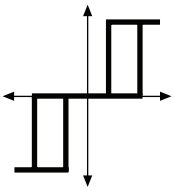

AC 24 V

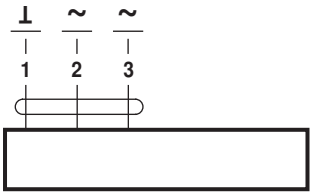

HR..24-3

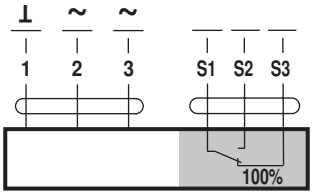

HR..24-3-S

AC 230 V

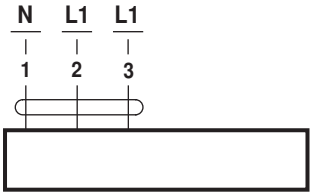

HR..230-3

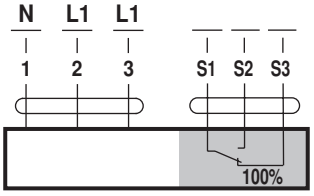

HR..230-3-S

AC 230 V

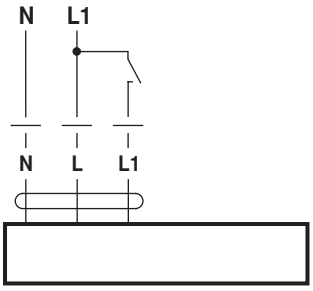

HR..230-1-T

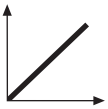

AC 24 V / DC 24 V

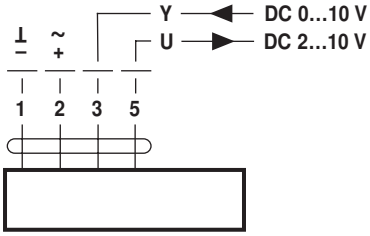

HR..24-SR

AC 230 V

www.belimo.com