Communicative RobustLine damper actuator for adjusting dampers in HVAC plants, comparable industrial plants and technical building installations

- Air damper size up to approx. 2 m²
- Torque motor 10 Nm
- Nominal voltage AC/DC 24 V
- Control modulating, communicative 2...10 V variable
- Position feedback 2...10 V variable
- Communication via Belimo MP-Bus
- Conversion of sensor signals
- Optimum protection against corrosion and chemical influences, UV radiation, damp and condensation

Picture may differ from product

## Technical data

| | | |
|---|---|---|
| **Electrical data** | Nominal voltage | AC/DC 24 V |
| | Nominal voltage frequency | 50/60 Hz |
| | Nominal voltage range | AC 19.2...28.8 V / DC 21.6...28.8 V |
| | Power consumption in operation | 3.5 W |
| | Power consumption in rest position | 1.4 W |
| | Power consumption for wire sizing | 6 VA |
| | Connection supply / control | Cable 1 m, 4x 0.75 mm² (halogen-free) |
| | Parallel operation | Yes (note the performance data) |
| **Data bus communication** | Communicative control | MP-Bus |
| | Number of nodes | MP-Bus max. 8 |
| **Functional data** | Torque motor | 10 Nm |
| | Torque variable | 25%, 50%, 75% reduced |
| | Operating range Y | 2...10 V |
| | Input impedance | 100 kΩ |
| | Operating range Y variable | Start point 0.5...30 V<br>End point 2.5...32 V |
| | Operating modes optional | Open/close<br>3-point (AC only)<br>Modulating (DC 0...32 V) |
| | Position feedback U | 2...10 V |
| | Position feedback U note | Max. 0.5 mA |
| | Position feedback U variable | Start point 0.5...8 V<br>End point 2.5...10 V |
| | Position accuracy | ±5% |
| | Direction of motion motor | selectable with switch 0/1 |
| | Direction of motion variable | electronically reversible |
| | Direction of motion note | Y = 0 V: At switch position 0 (ccw rotation) / 1 (cw rotation) |
| | Manual override | with push-button, can be locked |
| | Angle of rotation | Max. 95° |
| | Angle of rotation note | can be limited on both sides with adjustable mechanical end stops |
| | Running time motor | 150 s / 90° |
| | Running time motor variable | 43...173 s |

| | | |
|---|---|---|
| **Functional data** | Sound power level, motor | 35 dB(A) |
| | Adaptation setting range | manual |
| | Adaptation setting range variable | No action<br>Adaptation when switched on<br>Adaptation after pushing the manual override button |
| | Override control | MAX (maximum position) = 100%<br>MIN (minimum position) = 0%<br>ZS (intermediate position, AC only) = 50% |
| | Override control variable | MAX = (MIN + 32%)...100%<br>MIN = 0%...(MAX – 32%)<br>ZS = MIN...MAX |
| | Mechanical interface | Universal shaft clamp 10...20 mm |
| | Position indication | Mechanical, pluggable |
| **Safety data** | Protection class IEC/EN | III, Safety Extra-Low Voltage (SELV) |
| | Power source UL | Class 2 Supply |
| | Degree of protection IEC/EN | IP66/67 |
| | Degree of protection NEMA/UL | NEMA 4X |
| | Housing | UL Enclosure Type 4X |
| | EMC | CE according to 2014/30/EU |
| | Certification IEC/EN | IEC/EN 60730-1 and IEC/EN 60730-2-14 |
| | UL Approval | cULus according to UL60730-1A, UL60730-2-14 and CAN/CSA E60730-1<br>The UL marking on the actuator depends on the production site, the device is UL-compliant in any case |
| | Type of action | Type 1 |
| | Rated impulse voltage supply / control | 0.8 kV |
| | Pollution degree | 4 |
| | Ambient humidity | Max. 100% RH |
| | Ambient temperature | -30...50°C [-22...122°F] |
| | Storage temperature | -40...80°C [-40...176°F] |
| | Servicing | maintenance-free |
| **Weight** | Weight | 1.7 kg |

## Safety notes

- This device has been designed for use in stationary heating, ventilation and air-conditioning systems and must not be used outside the specified field of application, especially in aircraft or in any other airborne means of transport.
- Only authorised specialists may carry out installation. All applicable legal or institutional installation regulations must be complied with during installation.
- Junction boxes must at least correspond with housing IP degree of protection!
- The cover of the protective housing may be opened for adjustment and servicing. When it is closed afterwards, the housing must seal tight (see installation instructions).
- The device may only be opened at the manufacturer's site. It does not contain any parts that can be replaced or repaired by the user.
- The cables must not be removed from the device installed in the interior.
- To calculate the torque required, the specifications supplied by the damper manufacturers concerning the cross-section and the design, as well as the installation situation and the ventilation conditions must be observed.
- The device contains electrical and electronic components and must not be disposed of as household refuse. All locally valid regulations and requirements must be observed.
- The information on chemical resistance refers to laboratory tests with raw materials and finished products and to trials in the field in the areas of application indicated.
- The materials used may be subjected to external influences (temperature, pressure, constructional fixture, effect of chemical substances, etc.), which cannot be simulated in laboratory tests or field trials.
- The information regarding areas of application and resistance can therefore only serve as a guideline. In case of doubt, we definitely recommend that you carry out a test. This information does not imply any legal entitlement. Belimo will not be held liable and will provide no warranty. The chemical or mechanical resistance of the materials used is not alone sufficient for judging the suitability of a product. Regulations pertaining to combustible liquids such as solvents etc. must be taken into account with special reference to explosion protection.
- Flexible metallic cable conduits or threaded cable conduits of equal value are to be used for UL (NEMA) Type 4X applications.
- When used under high UV loads, e.g. extreme sunlight, the use of flexible metallic or equivalent cable conduits is recommended.

## Product features

**Fields of application**

The actuator is particularly suitable for utilisation in outdoor applications and is protected against the following weather conditions:
- Wood drying
- Animal breeding
- Food processing
- Agriculture
- Indoor swimming pools / bathhouses
- Rooftop ventilation plant rooms
- General outdoor applications
- Alternating climate
- Laboratories

**Resistances**

Noxious gas test EN 60068-2-60 (Fraunhofer Institut ICT / DE)
Salt fog spray test EN 60068-2-52 (Fraunhofer Institut ICT / DE)
Ammoniac test DIN 50916-2 (Fraunhofer Institut ICT / DE)
Climate test IEC60068-2-30 (Trikon Solutions AG / CH)
Disinfectant (animals) (Trikon Solutions AG / CH)
UV Test (Solar radiation at ground level) EN 60068-2-5, EN 60068-2-63 (Quinel / Zug CH)

## Product features

**Used materials**

Actuator housing polypropylene (PP)
Cable glands / hollow shaft polyamide (PA)
Connecting cable FRNC
Clamp / screws in general Steel 1.4404
Seals EPDM
Form fit insert aluminium anodised

**Operating mode**

Conventional operation:

The actuator is controlled with a standard control signal of DC 0...10 V (note the operating range) and drives to the position defined by the control signal. The measuring voltage U serves for the electrical display of the actuator position 0.5...100% and as control signal for other actuators.

Operation on Bus:

The actuator receives its digital control signal from the higher level controller via the MP-Bus and drives to the position defined. Connection U serves as communication interface and does not supply an analogue measuring voltage.

**Converter for sensors**

Connection option for a sensor (passive or active sensor or switching contact). The MP actuator serves as an analogue/digital converter for the transmission of the sensor signal via MP-Bus to the higher level system.

**Configurable device**

The factory settings cover the most common applications. Single parameters can be modified with Belimo Assistant 2 or ZTH EU.

**Simple direct mounting**

Simple direct mounting on the damper shaft with a universal shaft clamp, supplied with an anti-rotation mechanism to prevent the actuator from rotating.

**Manual override**

Manual override with push-button possible (the gear train is disengaged for as long as the button is pressed or remains locked).

**Adjustable angle of rotation**

Adjustable angle of rotation with mechanical end stops. Standard setting 0...90°. The housing cover must be removed to set the angle of rotation.

**High functional reliability**

The actuator is overload protected, requires no limit switches and automatically stops when the end stop is reached.

**Home position**

The first time the supply voltage is switched on, i.e. at the time of commissioning, the actuator carries out a synchronisation. The synchronisation is in the home position (0%).

The actuator then moves into the position defined by the control signal.

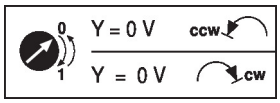


**Adaptation and synchronisation**

An adaptation can be triggered manually by pressing the "Adaptation" button or with Belimo Assistant 2. Both mechanical end stops are detected during the adaptation (entire setting range).

Automatic synchronisation after pressing the manual override button is configured. The synchronisation is in the home position (0%).

The actuator then moves into the position defined by the control signal.

A range of settings can be made using Belimo Assistant 2.

## Accessories

**Tools**

| Description | Type |
|---|---|
| Service tool, with ZIP-USB function, for configurable and communicative Belimo actuators, VAV controller and HVAC performance devices | ZTH EU |
| Service tool for wired and wireless setup, on-site operation and troubleshooting. | Belimo Assistant 2 |

## Accessories

| | Description | Type |
|---|---|---|
| | Adapter for Service-Tool ZTH | MFT-C |
| **Electrical accessories** | **Description** | **Type** |
| | Auxiliary switch 2x SPDT add-on, grey | S2A GR |
| | Feedback potentiometer 140 Ω add-on | P140A |
| | Feedback potentiometer 1 kΩ add-on | P1000A |
| | Feedback potentiometer 10 kΩ add-on | P10000A |
| **Gateways** | **Description** | **Type** |
| | Gateway MP to BACnet MS/TP | UK24BAC |
| | Gateway MP to Modbus RTU | UK24MOD |

## Electrical installation

**Supply from isolating transformer.**

**Parallel connection of other actuators possible. Observe the performance data.**

**Wire colours:**
1 = black
2 = red
3 = white
5 = orange

MP-Bus

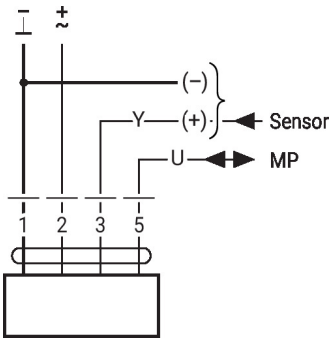


AC/DC 24 V, modulating

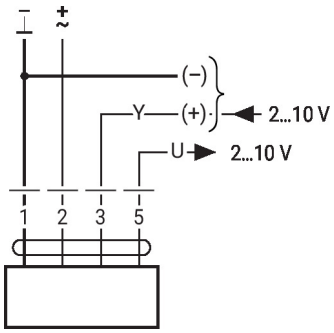


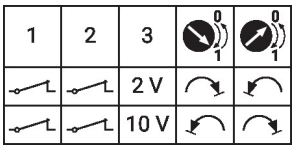

## Further electrical installations

### Functions with basic values (conventional mode)

Override control with AC 24 V with relay contacts

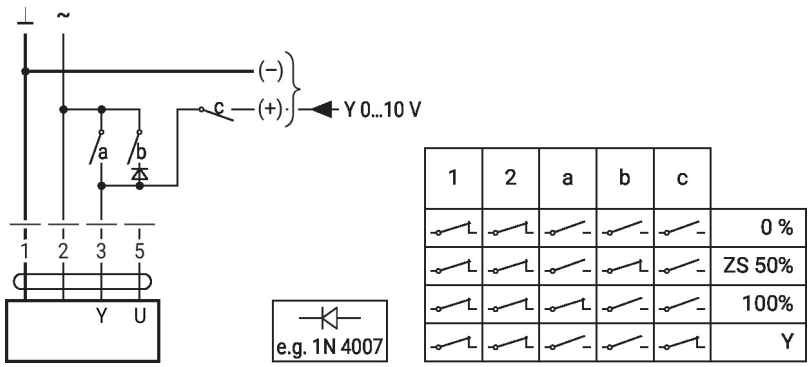


Override control with AC 24 V with rotary switch

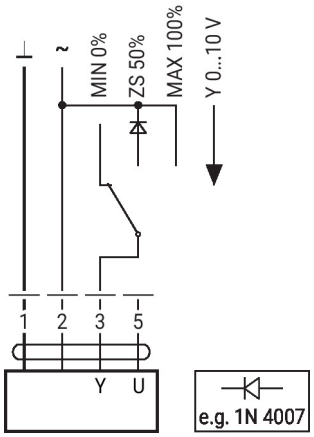


Control remotely 0...100% with positioner SG..

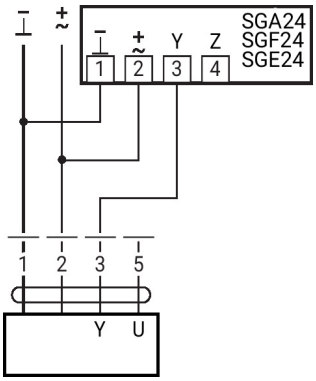


Minimum limit with positioner SG..

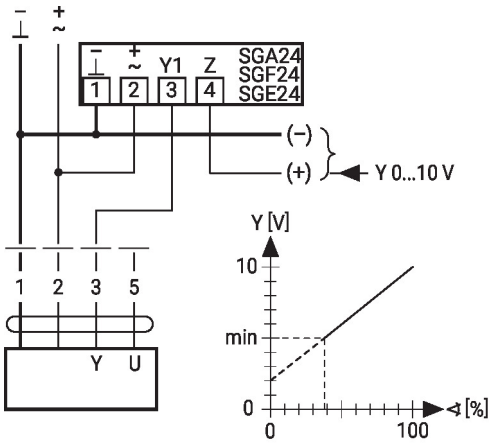


Primary/secondary operation (position-dependent)

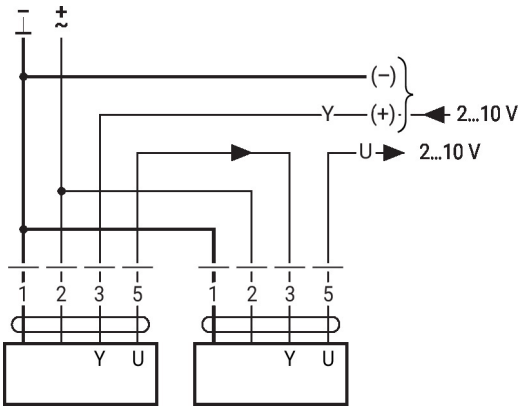

### Functions with basic values (conventional mode)

Control with 4...20 mA via external resistor

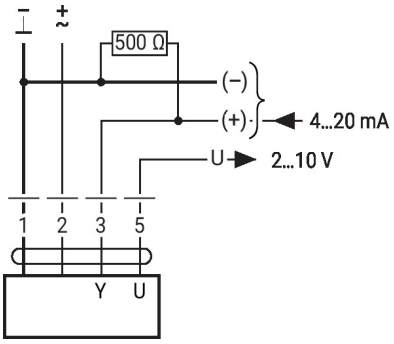


**Caution:**
The operating range must be set to DC 2...10 V.
The 500 Ohm resistor converts the 4...20 mA current signal to a voltage signal DC 2...10 V.

Functional check

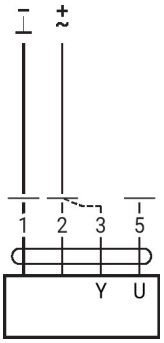


**Procedure**
1. Connect 24 V to connections 1 and 2
2. Disconnect connection 3:
– With direction of rotation 0: Actuator rotates to the left
– With direction of rotation 1: Actuator rotates to the right
3. Short-circuit connections 2 and 3:
– Actuator runs in opposite direction

### MP-Bus

MP-Bus Network topology

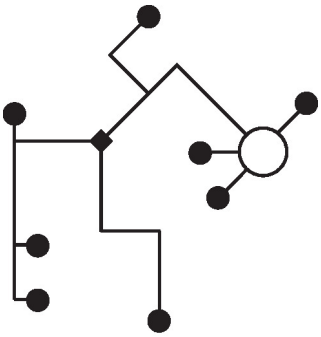

There are no restrictions for the network topology (star, ring, tree or mixed forms are permitted).
Supply and communication in one and the same 3-wire cable
• no shielding or twisting necessary
• no terminating resistors required

Connection on the MP-Bus

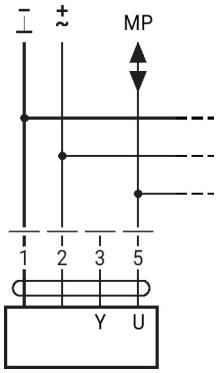


Max. 8 MP-Bus nodes

### MP-Bus

Connection of active sensors

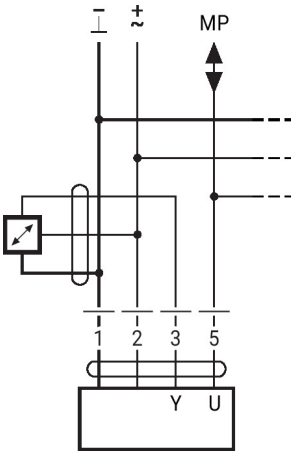


- Supply AC/DC 24 V
- Output signal 0...10 V (max. 0...32 V)
- Resolution 30 mV

Connection of external switching contact

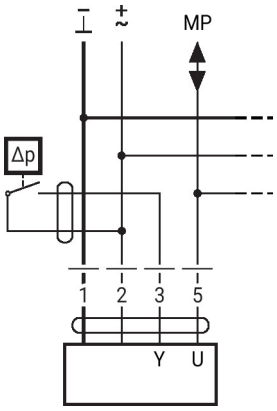


- Switching current 16 mA @ 24 V
- Start point of the operating range must be configured on the MP actuator as ≥0.5 V

Connection of passive sensors

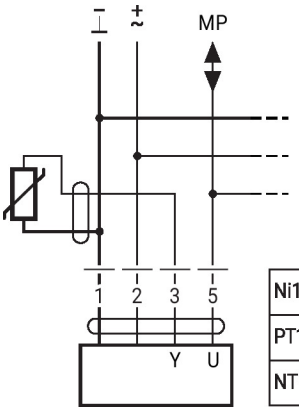


| | | |
|---|---|---|
| Ni1000 | −28...+98°C | 850...1600 Ω [2] |
| PT1000 | −35...+155°C | 850...1600 Ω [2] |
| NTC | −10...+160°C [1] | 200 Ω...60 kΩ [2] |

1) Depending on the type
2) Resolution 1 Ohm
Compensation of the measured value is recommended

### Functions with specific parameters (configuration necessary)

Override control and limiting with AC 24 V with relay contacts

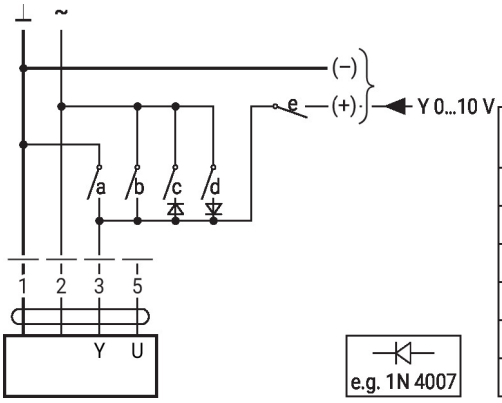


| 1 | 2 | a | b | c | d | e | |
|---|---|---|---|---|---|---|---|
| L | L | L | – | – | – | – | Close |
| L | L | – | – | – | – | – | MIN |
| L | L | – | – | L | – | – | ZS |
| L | L | – | L | – | – | – | MAX |
| L | L | – | – | – | L | – | Open |
| L | L | – | – | – | – | L | Y |

Control open/close

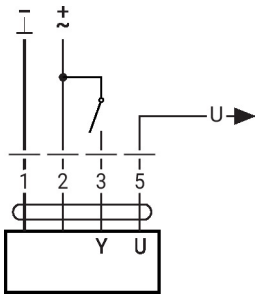

## Further electrical installations

### Functions with specific parameters (configuration necessary)

Override control and limiting with AC 24 V with rotary switch

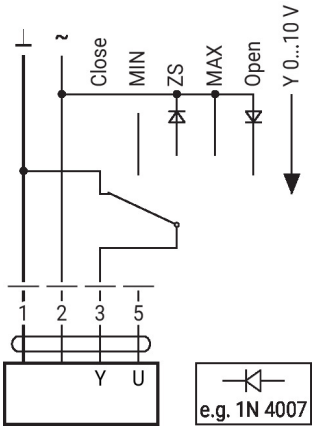


**Caution:**
The "Close" function is only guaranteed if the start point of the operating range is defined as min. 0.5 V.

Control 3-point with AC 24 V

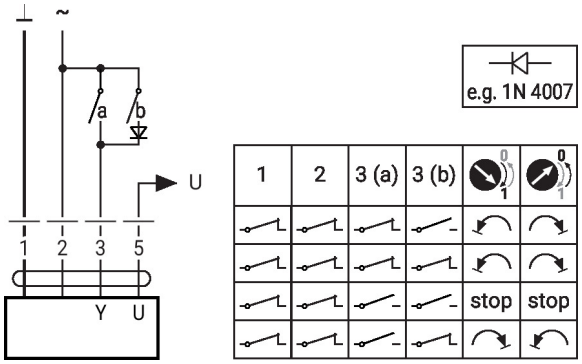


## Operating controls and indicators

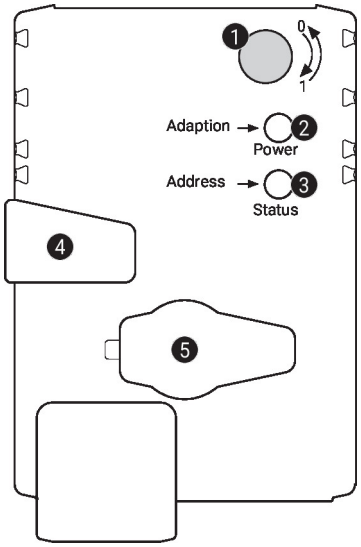


**1 Direction-of-rotation switch**

| | |
|---|---|
| Switch over: | Direction of rotation changes |

**2 Push-button and LED display green**

| | |
|---|---|
| Off: | No power supply or malfunction |
| On: | In operation |
| Press button: | Triggers angle-of-rotation adaptation, followed by standard mode |

**3 Push-button and LED display yellow**

| | |
|---|---|
| Off: | Standard mode |
| On: | Adaptation or synchronisation process active |
| Flickering: | MP-Bus communication active |
| Flashing: | Request for addressing from MP client |
| Press button: | Confirmation of the addressing |

**4 Manual override button**

| | |
|---|---|
| Press button: | Gear train disengages, motor stops, manual override possible |
| Release button: | Gear train engages, synchronisation starts, followed by standard mode |

**5 Service plug**
For connecting configuration and service tools

**Check power supply connection**

| | |
|---|---|
| 2 Off and 3 On | Possible wiring error in power supply |

## Service

**Wired connection**

The device can be configured by ZTH EU via the service socket.

For an extended configuration, Belimo Assistant 2 can be connected.

Connection ZTH EU / Belimo Assistant 2

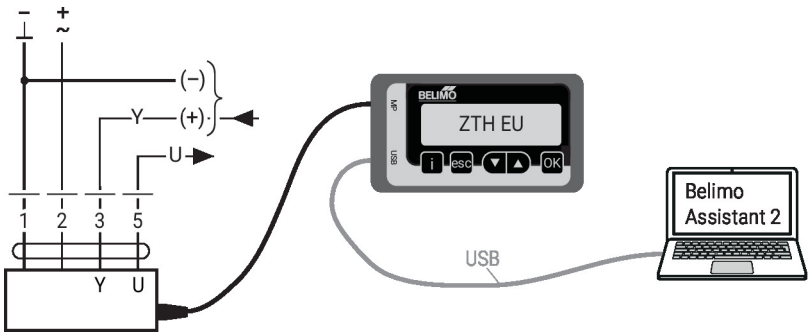


## Dimensions

**Spindle length**

| | |
|---|---|
| 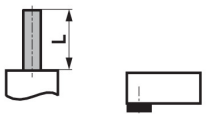 | - |
| | 20...58 |

**Clamping range**

| | | |
|---|---|---|
| 10...20 | 8...14 | 10...20 |

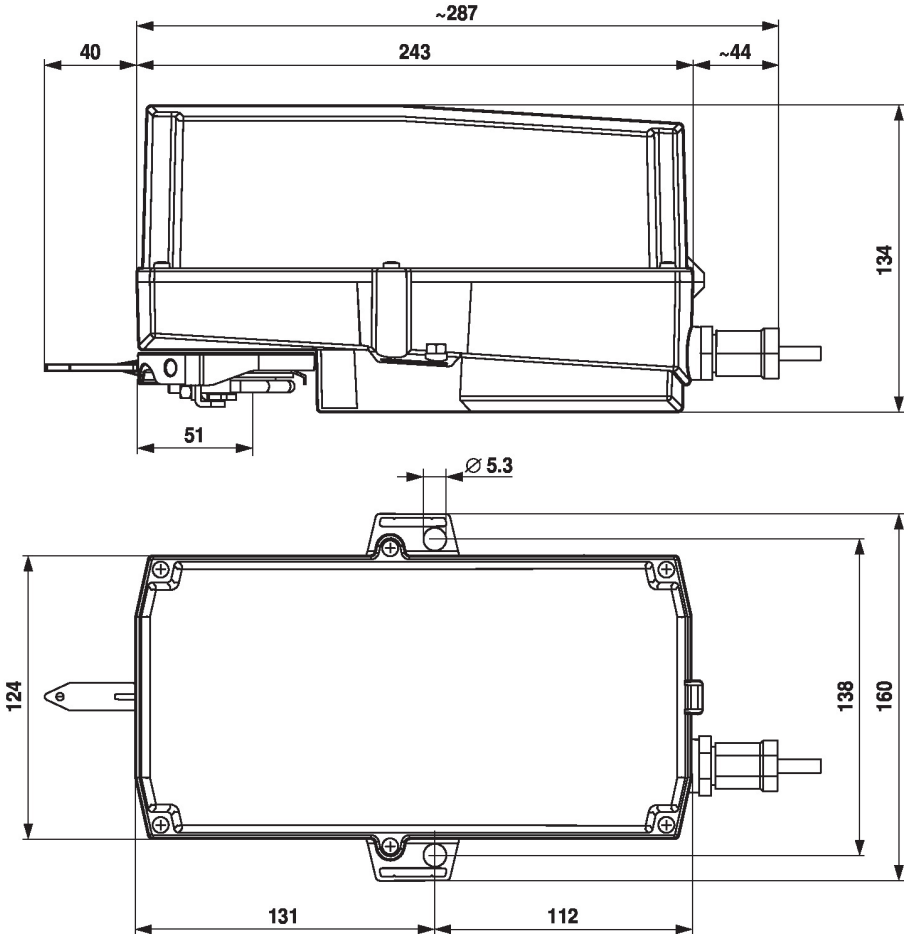


## Further documentation

- Overview MP Cooperation Partners
- Tool connections
- Introduction to MP-Bus Technology
- Quick Guide – Belimo Assistant 2

## Application notes

- For digital control of actuators in VAV applications patent EP 3163399 must be considered.