**Communicative globe valve actuator with emergency control function for 2-way and 3-way globe valves**

- **Actuating force 1000 N**
- **Nominal voltage AC/DC 24 V**
- **Control Modulating DC (0)2...10 V Variable**
- **Nominal stroke 20 mm**
- **Actuating time 35 s / 20 mm**
- **Communication via BELIMO MP-Bus**
- **Conversion of sensor signals**
- **Design life SuperCaps: 15 years**

MP BUS

RETROFIT

## Technical data

| | | |
|---|---|---|
| **Electrical data** | Nominal voltage | AC/DC 24 V |
| | Nominal voltage frequency | 50/60 Hz |
| | Nominal voltage range | AC 19.2...28.8 V / DC 21.6...28.8 V |
| | Power consumption in operation | 4.5 W |
| | Power consumption in rest position | 1.5 W |
| | Power consumption for wire sizing | 9 VA |
| | Connection supply / control | Terminals 4 mm² (cable Ø 4...10 mm) |
| | Parallel operation | Yes (note the performance data) |
| **Functional data** | Actuating force | 1000 N |
| | Positioning signal Y | DC 0...10 V |
| | Positioning signal Y note | Input impedance 100 kΩ |
| | Control signal Y variable | Open-close<br>3-point (AC only)<br>Modulating (DC 0...32 V) |
| | Operating range Y | DC 2...10 V |
| | Operating range Y variable | Start point DC 0.5...30 V<br>End point DC 2.5...32 V |
| | Position feedback U | DC 2...10 V |
| | Position feedback U note | Max. 0.5 mA |
| | Position feedback U variable | Start point DC 0.5...8 V<br>End point DC 2.5...10 V |
| | Setting emergency position (POP) | Actuator spindle 0...100%, adjustable (POP rotary button) |
| | Bridging time (PF) variable | 1...10 s |
| | Position accuracy | 5% absolute |
| | Manual override | Gear disengagement with push-button |
| | Nominal stroke | 20 mm |
| | Actuating time | 35 s / 20 mm |
| | Actuating time variable | 35...90 s / 20 mm |
| | Actuating time emergency control function | 35 s / 20 mm |
| | Adaption setting range | manual (automatic on first power-up) |
| | Adaption setting range variable | No action<br>Adaption when switched on<br>Adaption after pushing the gear disengagement button |
| | Override control | MAX (maximum position) = 100%<br>MIN (minimum position) = 0%<br>ZS (intermediate position, AC only) = 50% |
| | Override control variable | MAX = (MIN + 33%)...100%<br>MIN = 0%...(MAX – 33%)<br>ZS = MIN...MAX |
| | Sound power level motor | 60 dB(A) |
| | Sound power level emergency control position | 60 dB(A) |
| | Position indication | Mechanically, 5...20 mm stroke |
| **Safety** | Protection class IEC/EN | III Safety extra-low voltage |
| | Degree of protection IEC/EN | IP54 |
| | EMC | CE according to 2004/108/EC |

## Technical data

| | | |
|---|---|---|
| **Safety** | Certification IEC/EN | IEC/EN 60730-1 and IEC/EN 60730-2-14 |
| | Mode of operation | Type 1.AA |
| | Rated impulse voltage supply / control | 0.8 kV |
| | Control pollution degree | 3 |
| | Ambient temperature | 0...50°C |
| | Non-operating temperature | -40...80°C |
| | Ambient humidity | 95% r.h., non-condensing |
| | Maintenance | Maintenance-free |
| **Weight** | Weight approx. | 2.8 kg |
| **Terms** | Abbreviations | POP = Power off position / emergency setting position<br>CPO = Controlled power off / controlled emergency control function<br>PF = Power fail delay time / bridging time |

## Safety notes

- This device has been designed for use in stationary heating, ventilation and air conditioning systems and is not allowed to be used outside the specified field of application, especially in aircraft or in any other airborne means of transport.
- Only authorised specialists may carry out installation. All applicable legal or institutional installation regulations must be complied during installation.
- The switch for changing the direction of motion and so the closing point may be adjusted only by authorised specialists. The direction of motion is critical, particularly in connection with frost protection circuits.
- The device may only be opened at the manufacturer‘s site. It does not contain any parts that can be replaced or repaired by the user.
- The device contains electrical and electronic components and is not allowed to be disposed of as household refuse. All locally valid regulations and requirements must be observed.

## Product features

**Mode of operation**

Conventional operation:
The actuator is connected with a standard modulating signal of DC 0...10 V and moves to the position defined by the positioning signal at the same time as the integrated capacitors are loaded.
Interrupting the supply voltage causes the valve to be moved to the selected emergency setting position (POP) by means of stored electrical energy.
Operation on the MP-Bus:
The actuator receives its digital positioning signal from the higher level controller via the MP-Bus and travels to the position defined. Connection U serves as communication interface and does not supply an analogue measuring voltage.

## Product features

**Pre-charging time (start up)**

The capacitor actuators require a pre-charging time. This time is used for charging the capacitors up to a usable voltage level. This ensures that, in the event of an electricity interruption, the actuator can move at any time from its current position into the preset emergency setting position (POP).
The duration of the pre-charging time depends mainly on following factors:
– Duration of the electricity interruption
– PF delay time (bridging time)

Typical pre-charging time

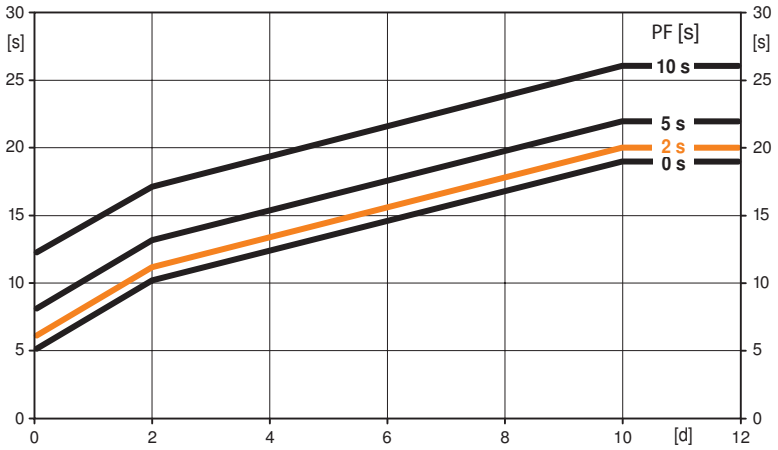


| PF [s] | [d] | | | | |
|---|---|---|---|---|---|
| | **0** | **1** | **2** | **7** | **≥10** |
| **0** | 5 | 8 | 10 | 15 | 19 |
| **2** | 6 | 9 | 11 | 16 | 20 |
| **5** | 8 | 11 | 13 | 18 | 22 |
| **10** | 12 | 15 | 17 | 22 | 26 |
| | [s] | | | | |

[d] = Electricity interruption in days
[s] = Pre-charging time in seconds
PF[s] = Bridging time
Calculation example: Given an electricity interruption of 3 days and a bridging time (PF) set at 5 s, the actuator requires a pre-charging time of 14 s after the electricity has been reconnected (see graphic).

**Delivery condition (capacitors)**

The actuator is completely discharged after delivery from the factory, which is why the actuator requires approximately 20 s pre-charging time before initial commissioning in order to bring the capacitors up to the required voltage level.

**Converter for sensors**

Connection option for a sensor (passive or active sensor or switching contact). The MP actuator serves as an analogue/digital converter for the transmission of the sensor signal via MP-Bus to the higher level system.

**Parameterisable actuators**

The factory settings cover the most common applications. Input and output signals and other parameters can be altered with the PC-Tool MFT-P or with the Service tool ZTH EU.

**Installation on third-party valves**

The retrofit actuators for installation on a wide range of valves from various manufacturers are comprised of an actuator, bracket, universal valve neck adapter and universal valve stem adapter. Adapt the valve neck and valve stem to begin with, then attach the retrofit bracket to the valve neck adapter. Now fit the retrofit actuator into the bracket and connect it to the valve. Whilst taking the position of the valve closing point into account, secure the actuator to the bracket and then conduct the commissioning process. The valve neck adapter/actuator can be rotated through 360° on the valve neck, provided it is permitted by the size of the installed valve.

**Installation on BELIMO valves**

Please use standard actuators from Belimo for installation on Belimo globe valves. The installation of retrofit actuators on Belimo globe valves is technically possible.

**Manual override**

Manual control with push-button possible - temporary. The gear is disengaged and the actuator decoupled for as long as the button is pressed.
The stroke can be adjusted by using a hexagon socket screw key (4 mm), which is inserted into the top of the actuator. The stroke spindle extends when the key is rotated clockwise.

**High functional reliability**

The actuator is overload protected, requires no limit switches and automatically stops when the end stop is reached.

**Position indication**

The stroke is indicated mechanically on the bracket with tabs. The stroke range adjusts itself automatically during operation.

## Product features

**Home position**

Factory setting: Actuator spindle is retracted.
The first time the supply voltage is switched on, i.e. at the time of commissioning, the actuator carries out an adaption, which is when the operating range and position feedback adjust themselves to the mechanical setting range.
The actuator then moves into the position defined by the positioning signal.

**Direction of stroke switch**

When actuated, the direction of stroke switch changes the running direction in normal operation. The direction of stroke switch has no influence on the emergency setting position (POP) which has been set.

**Adaption and synchronisation**

An adaption can be triggered manually by pressing the „Adaption“ button or with the PC-Tool. Both mechanical end stops are detected during the adaption (entire setting range).
Automatic synchronisation after pressing the gearbox disengagement button is configured. The synchronisation is in the home position (0%).
The actuator then moves into the position defined by the positioning signal.
A range of settings can be adapted using the PC-Tool (see MFT-P documentation)

**Rotary knob emergency setting position**

The «Emergency setting position» rotary knob can be used to adjust the desired emergency setting position (POP). In the event of an electricity interruption, the actuator will move into the selected emergency setting position, taking into account the bridging time (PF) of 2 s which was set ex-works.
Settings: The rotary knob must be set to the «Tool» position for retroactive settings of the emergency setting position with the BELIMO service tool MFT-P. Once the rotary knob is set back to the range 0…100%, the manually set value will have positioning authority

**Bridging time (PF)**

Electricity interruptions can be bridged up to a maximum of 10 s.
In the event of an electricity interruption, the actuator will remain stationary in accordance with the set bridging time. If the electricity interruption is greater than the set bridging time, then the actuator will move into the selected emergency setting position (POP).
The bridging time set ex-works is 2 s. This can be modified on site in operation with the use of the BELIMO service tool MFT-P.
Settings: The rotary knob must not be set to the «Tool» position!
Only the values need to be entered for retroactive adjustments of the bridging time with the BELIMO service tool MFT-P.

## Accessories

| | Description | Type |
|---|---|---|
| **Gateways** | Gateway MP for BACnet MS/TP, AC/DC 24 V | UK24BAC |
| | Gateway MP to Modbus RTU, AC/DC 24 V | UK24MOD |
| | Gateway MP for LonWorks®, AC/DC 24 V, LonMark-certified | UK24LON |
| | Gateway MP to KNX/EIB, AC/DC 24 V, EIBA certified | UK24EIB |

| | Description | Type |
|---|---|---|
| **Electrical accessories** | Connecting cable 5 m, A+B: RJ12 6/6, To ZTH/ZIP-USB-MP | ZK1-GEN |
| | Connection cable 5 m, A: RJ11 6/4, B: Free wire end, To ZTH/ZIP-USB-MP | ZK2-GEN |
| | MP-Bus power supply for MP actuators, AC 230/24V for local power supply | ZN230-24MP |
| | Connecting board MP bus suitable for wiring boxes EXT-WR-FP..-MP | ZFP2-MP |
| | Auxiliary switch, 2 x SPDT, add-on | S2A-H |

| | Description | Type |
|---|---|---|
| **Service Tools** | Service Tool, for MF/MP/Modbus/LonWorks actuators and VAV-Controller | ZTH EU |
| | Belimo PC-Tool, software for adjustments and diagnostics | MFT-P |
| | Adapter to Service-Tool ZTH | MFT-C |

## Electrical installation

**Notes**

- Connection via safety isolating transformer.
- Parallel connection of other actuators possible. Observe the performance data.
- Direction of stroke switch factory setting: Actuator spindle retracted.

### Wiring diagrams

AC/DC 24 V, modulating

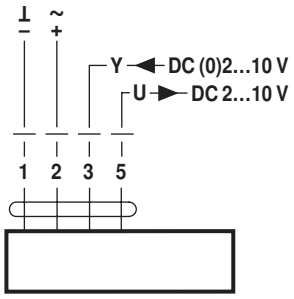


Operation on the MP-Bus

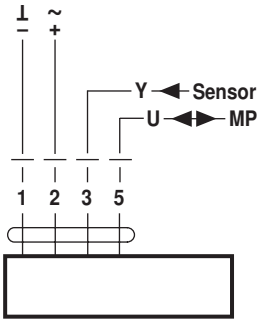


## Functions

### Functions when operated on MP-Bus

Connection on the MP-Bus

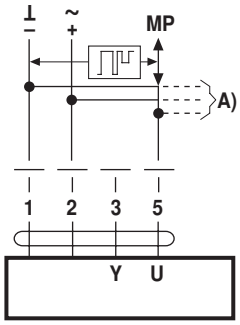


A) more actuators and sensors (max.8)

Power topology

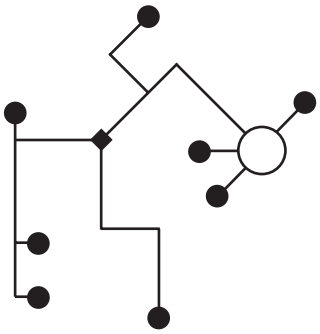

There are no restrictions for the network topology (star, ring, tree or mixed forms are permitted).
Supply and communication in one and the same 3-wire cable
- no shielding or twisting necessary
- no terminating resistors required

Connection of active sensors

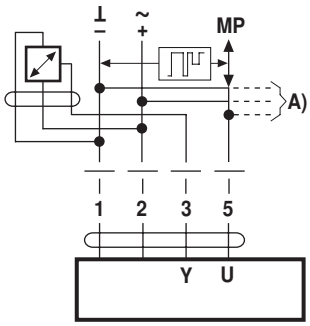


A) more actuators and sensors (max.8)
- Supply AC/DC 24 V
- Output signal DC 0...10 V (max. DC 0...32 V)
- Resolution 30 mV

Connection of external switching contact

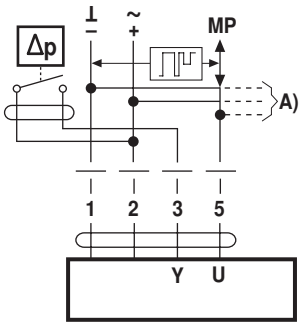


A) more actuators and sensors (max.8)
- Switching current 16 mA @ 24 V
- Start point of the operating range must be parameterised on the MP actuator as ≥ 0.5 V

Connection of passive sensors

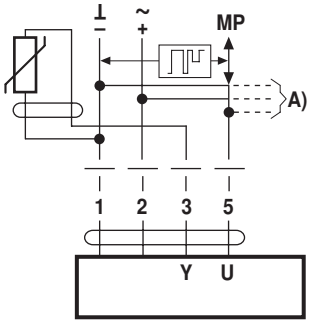


| | | |
|---|---|---|
| **Ni1000** | –28...+98°C | 850...1600 Ω 2) |
| **PT1000** | –35...+155°C | 850...1600 Ω 2) |
| **NTC** | –10...+160°C 1) | 200 Ω...60 kΩ 2) |

A) more actuators and sensors (max.8)
1) Depending on the type
2) Resolution 1 Ohm

## Functions

### Functions with basic values (conventional mode)

Override control with AC 24 V with relay contacts

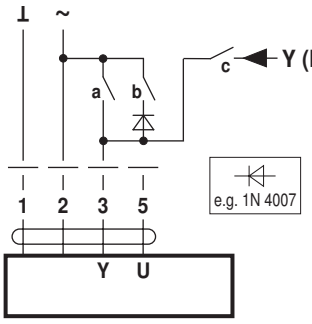


| | a | b | c |
|---|---|---|---|
| 0% | ⁄ | ⁄ | ⁄ |
| ZS 50% | ⁄ | ⊥ | ⁄ |
| 100% | ⊥ | ⁄ | ⁄ |
| Y | ⁄ | ⁄ | ⊥ |

Override control with AC 24 V with rotary switch

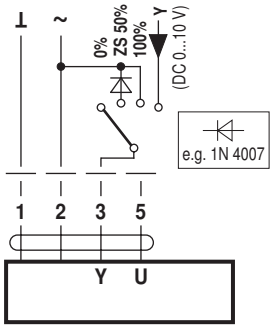


Remote control 0...100% with positioner SG..

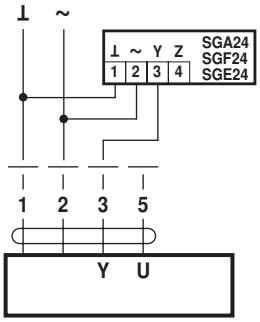


Minimum limit with positioner SG..

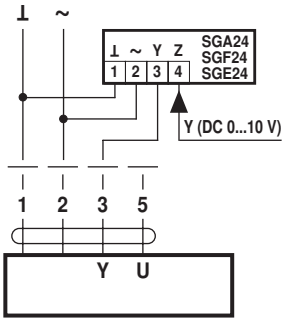


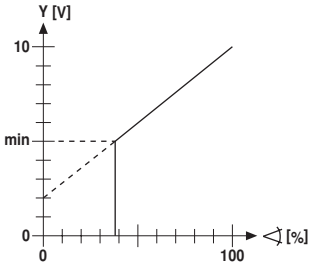


Follow-up control (position-dependent)

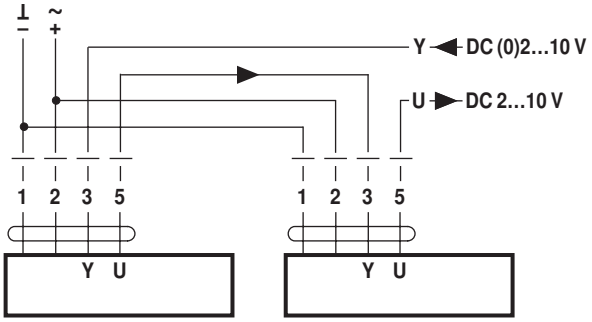


Control with 4...20 mA via external resistor

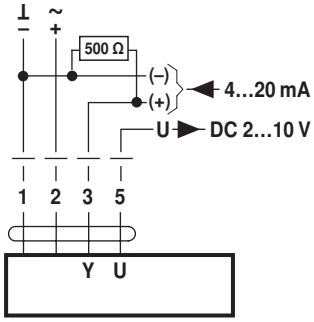


**Caution:**
The operating range must be set to DC 2...10 V.
The 500 Ω resistor converts the 4...20 mA current signal to a voltage signal DC 2...10 V

Functional check

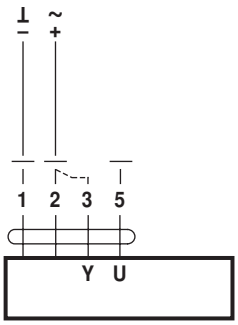


**Procedure**
1. Apply 24 V to connection 1 and 2
2. Disconnect connection 3:
- with upwards direction of motion: closing point at top
- with downwards direction of motion: closing point at bottom
3. Short circuit connections 2 and 3:
- Actuator runs in the opposite direction

## Functions

**Functions for actuators with specific parameters (Parametrisation with PC-Tool necessary)**

Override control and limiting with AC 24 V with relay contacts

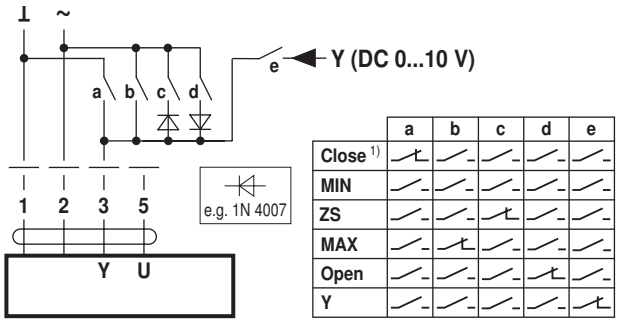


| | a | b | c | d | e |
|---|---|---|---|---|---|
| Close [1] | ⊥ | – | – | – | – |
| MIN | – | – | – | – | – |
| ZS | – | – | ⊥ | – | – |
| MAX | – | ⊥ | – | – | – |
| Open | – | – | – | ⊥ | – |
| Y | – | – | – | – | ⊥ |

Override control and limiting with AC 24 V with rotary switch

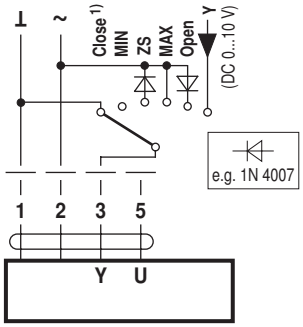


1) **Caution:** This function is only guaranteed if the start point of the operating range is defined as min. 0.5 V.

Control open-close

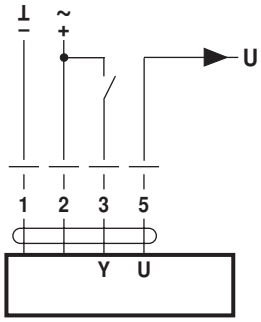


Control 3-point

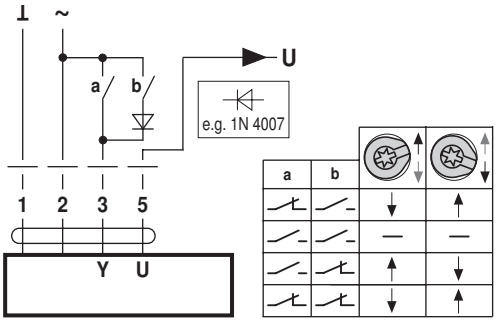


| a | b | | |
|---|---|---|---|
| ⊥ | – | ↓ | ↑ |
| – | – | — | — |
| – | ⊥ | ↑ | ↓ |
| ⊥ | ⊥ | ↓ | ↑ |

## Operating controls and indicators

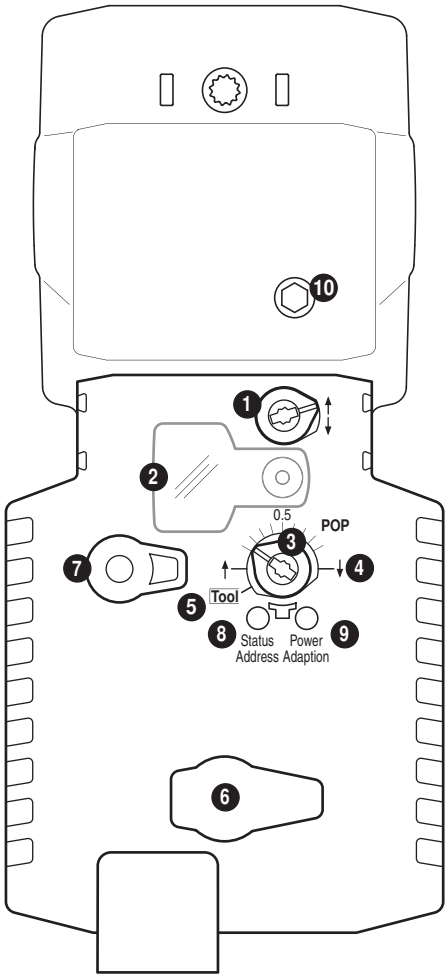


**1 Direction of stroke switch**
Switch over: Direction of stroke changes

**2 Cover, POP button**

**3 POP button**

**4 Scale for manual adjustment**

**5 Position for adjustment with tool**

**6 Service plug**
For connecting the parameterisation and service tools

**7 Gear disengagement button**
Press button: Gear disengaged, motor stops, manual override possible
Release button: Gear engaged, standard mode

| LED displays 8 yellow | 9 green | Meaning / function |
|---|---|---|
| Off | On | Operation OK |
| Off | Flashing | POP function active |
| On | Off | Pre-charging time SuperCap, Fault SuperCap or wiring error in supply |
| Off | Off | Not in operation |
| On | On | Adaptation process active |
| Flickering | On | Communication active |

**8 Push-button (LED yellow)**
Press button: Confirmation of addressing

**9 Push-button (LED green)**
Press button Triggers stroke adaptation, followed by standard mode

**10 Manual override**
Clockwise: Actuator spindle extends
Counterclockwise: Actuator spindle retracts

Emergency position (POP) setting

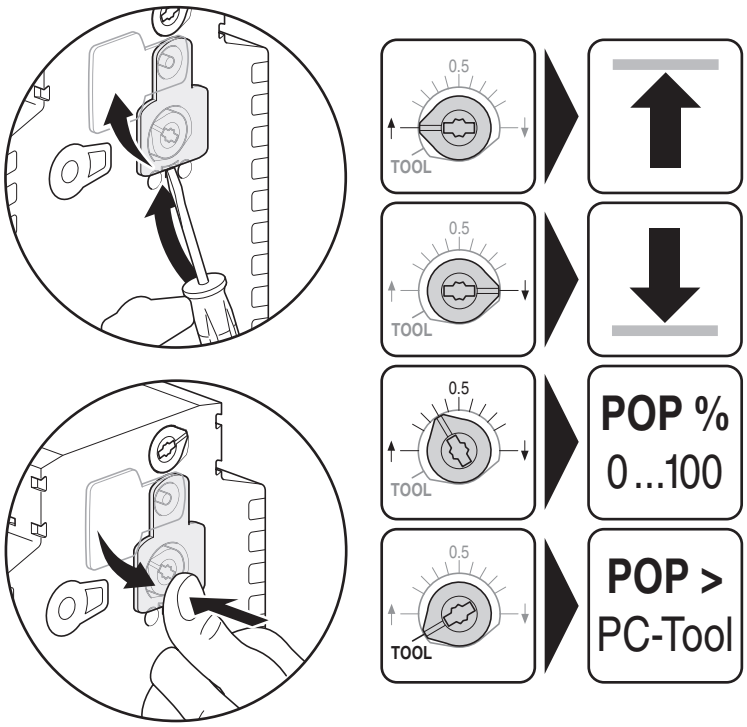

## Service

**Notes**

- The actuator can be parameterised by PC-Tool and ZTH EU via the service socket.

ZTH EU connection

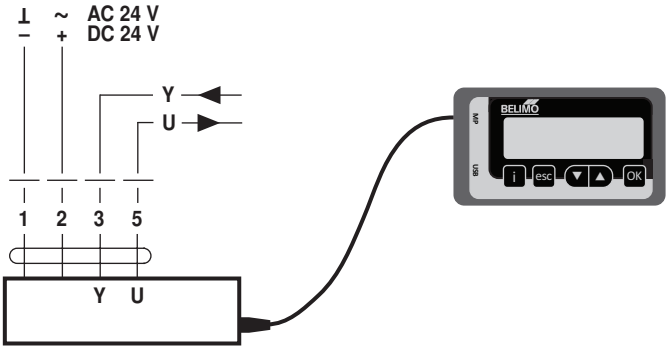


PC-Tool connection

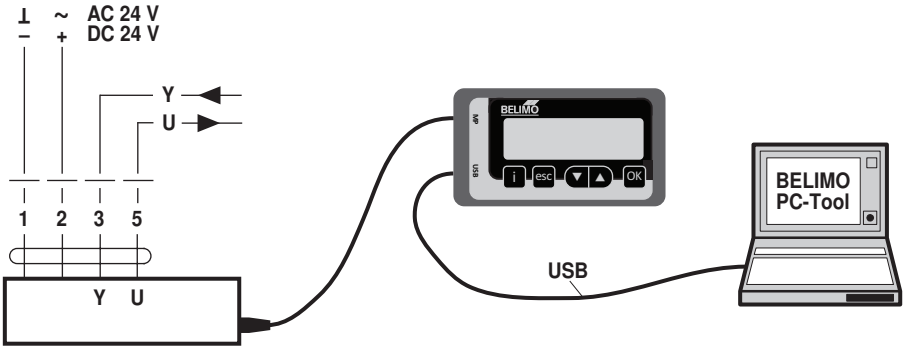


## Dimensions [mm]

**Dimensional drawings**

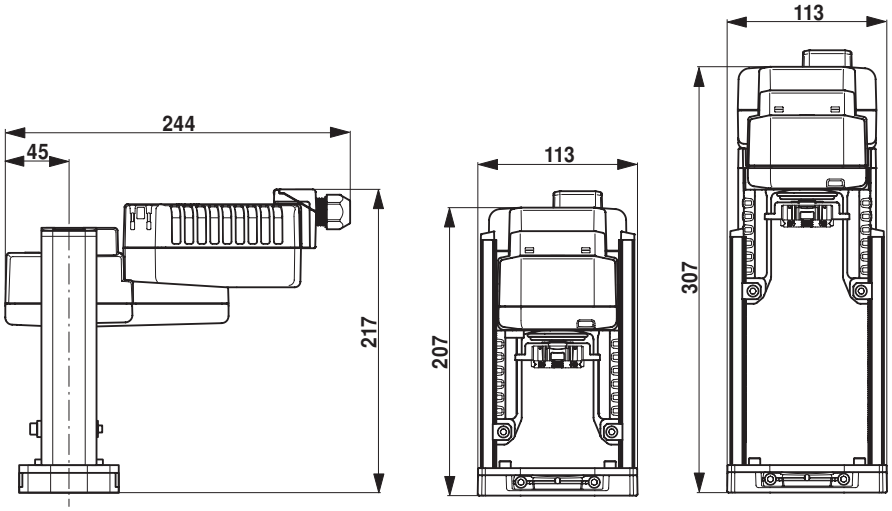


## Further documentation

- Installation instructions for actuators