Parameterisable spring return actuator with emergency function in the IP66 protective housing for adjusting air dampers in industrial plants and in technical building installations

- **For air dampers up to approx. 4 m²**
- **Torque 20 Nm**
- **Nominal voltage AC/DC 24 V**
- **Control: modulating DC 0 ... 10 V or variable**
- **Position feedback DC 0 ... 10 V or variable**

Optimum weather protection (for use in ambient temperatures up to –40°C, there is a separate actuator available with built-in heater ex works)

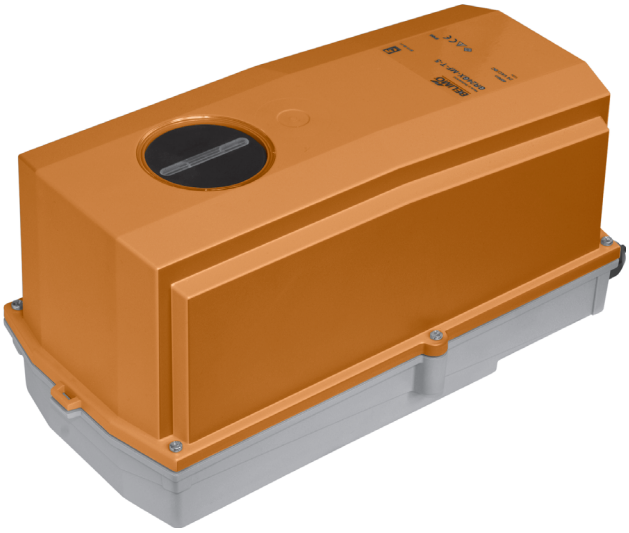

Technical data

Electrical data				
Nominal voltage		AC 24 V, 50/60 Hz / DC 24 V		
Nominal voltage range		AC 19.2 ... 28.8 V / DC 21.6 ... 28.8 V		
Power consumption	In operation	8.5 W @ nominal torque		
	At rest	3.5 W		
	For wire sizing	11 VA (I_{max} 20 A @ 5 ms)		
Connection		Cable 1 m, 4 x 0.75 mm²		
Parallel operation		Yes		
Functional data		**Factory settings**	**Variable**	**Setting**
Torque (nominal torque)	Motor	Min. 20 Nm @ nominal voltage		
	Spring return	Min. 20 Nm		
Control	Control signal Y	DC 0 … 10 V, input impedance 100 kΩ	Open-close, 3-point (only AC), modulating (DC 0 ... 32 V)	.....
	Operating range	DC 0.5 ... 10 V	Start point DC 0.5 ... 30 V End point DC 2.5 ... 32 V	.....
Position feedback (measuring voltage U)		DC 0.5 ... 10 V, max. 0.5 mA	Start point DC 0.5 ... 8 V End point DC 2.5 ... 10 V	.....
Position accuracy		±5%		
Direction of rotation	Motor	Reversible with switch ↻ / ↺		
	Spring return	L (ccw)		
Direction of rotation Y = 0 V		At switch position 1 ↻ or 0 ↺, respectively	Electronically reversible	.....
Manual override		With hand crank and interlocking switch		
Angle of rotation		Max. 95°∢, adjustable from 33% in 5% steps (with enclosed angle of rotation limiter)		
Running time	Motor	≤150 s / 90°∢	70 ... 220 s	.....
	Spring return	≤20 s @ –20 ... 50°C / max. 60 s @ –30°C		
Automatic adjustment of running time, operating range and measuring signal U to match the mechanical angle of rotation		Manual triggering of the adaption by pressing the «Adaption» button	Automatic adaption whenever the supply voltage is switched on, or manual triggering	.....
Override control		MAX (maximum position) = 100% MIN (minimum position) = 0% ZS (intermediate position, only AC) = 50%	MAX = (MIN + 32%) ...100% MIN = 0% ... (MAX – 32%) ZS = MIN ... MAX	.....
Sound power level	Motor	≤40 dB (A) @ 150 s running time		
	Spring return	≤62 dB (A)		
Service life		Min. 60,000 emergency positions		
Position indication		Mechanical		
Safety				
Protection class		**III** Safety extra-low voltage UL Class 2 Supply		
Degree of protection		IP66 NEMA 4, UL Enclosure Type 4		
EMC		CE according to 2004/108/EC		

Technical data *(Continued)*

Safety	
Certification	Certified to IEC/EN 60730-1 and IEC/EN 60730-2-14 cULus according to UL 60730-1 and UL 60730-2-14 and CAN/CSA E60730-1:02
Mode of operation	Type 1.AA
Rated impulse voltage	0.8 kV
Control pollution degree	4
Ambient temperature	–30 ... +50°C (actuator with built-in heater –40 ... +50°C)
Non-operating temperature	–40 ... +80°C
Ambient humidity	100% r.h.
Maintenance	Maintenance-free
Dimensions / Weight	
Dimensions	See «Dimensions» on page 6
Weight	Approx. 5.3 kg

Safety notes

- **The actuator is not allowed to be used outside the specified field of application, especially in aircraft or in any other airborne means of transport.**
- **It may only be installed by suitably trained personnel. Any legal regulations or regulations issued by authorities must be observed during installation.**
- **The cover of the protective housing may be opened for adjustment and servicing. When it is closed afterwards, the housing must seal tight (see installation instructions).**
- **The device on the inside may only be opened up in the factory. It does not contain any parts that can be replaced or repaired by the user.**
- **When calculating the required torque, the specifications supplied by the damper manufacturers (cross-section, design, installation site), and the air flow conditions must be observed.**
- **The device contains electrical and electronic components and is not allowed to be disposed of as household refuse. All locally valid regulations and requirements must be observed.**
- **The actuator is not designed for applications where chemical influences (gases, fluids) are present or for utilisation in corrosive environments in general.**
- **The materials used may be subjected to external influences (temperature, pressure, constructional fixture), that cannot be simulated in laboratory test or field trials.**
  In case of doubt, we definitely recommend that you carry out a test. This information does not imply any legal entitlement. Belimo will not be held liable and will provide no warranty.
- **For UL (NEMA) Type 4 applications flexible metallic cable conduits or threaded cable conduits of equal value are to be used.**
- **The actuator may not be used in plenum applications (e.g. suspended ceilings or raised floors).**

Product features

Fields of application

The actuator is particularly suitable for utilisation in outdoor applications and is protected against the following weather conditions:
– UV radiation
– rain / snow
– dirt / dust
– humidity
– Changing atmosphere / frequent and severe temperature fluctuations (recommendation: use the actuator with integrated factory-installed heating which can be ordered separately to prevent internal condensation)

Product features

(continued)

Mode of operation

The actuator moves the damper actuator to the operating position at the same time as tensioning the return spring. The damper is turned back to the emergency position by spring force if the supply voltage is interrupted.
The actuator is controlled with a standard modulating signal of DC 0 ... 10 V and travels to the position defined by the control signal. Measuring voltage U serves for the electrical display of the damper position 0 ... 100% and as slave control signal for other actuators.

Parameterisable actuators

The factory settings cover the most common applications. Input and output signals and other parameters can be altered with the BELIMO Service tool MFT-P or the adjustment and diagnostic tool ZTH-GEN

Simple direct mounting

Simple direct mounting on the damper spindle with a universal spindle clamp, supplied with an anti-rotation strap to prevent the actuator from rotating.

Manual override

Manual operation of the damper with the hand crank, locking in any position with the interlocking switch. Unlocking is manual or automatic by applying the operating voltage.
The housing cover must be removed to set the manual override.

Adjustable angle of rotation

Adjustable angle of rotation with mechanical end stop.
The housing cover must be removed to set the angle of rotation.

High operational reliability

The actuator is overload-proof, requires no limit switches and automatically stops when the end stop is reached.

Home position

When the supply voltage is switched on, the actuator automatically detects its emergency position (zero initialisation). This process, which takes place with the actuator stationary, lasts <15 s.

Accessories

Electrical accessories

Description	Data sheet
BELIMO Service tool MFT-P	
Adjustment and diagnostic tool ZTH-GEN	
Auxiliary switch unit S2A-F *	T2 - S2A-F
Feedback potentiometer unit P200A-F **	T2 - P200A-F
Cable socket IP66/NEMA4 housing Z-KB-PG11	
Position positioner SGA24, SGE24 and SGF24	T2 - SG..24
Digital position indication ZAD24	T2 - ZAD24
Room temperature controller CR24..	S4 - CR24-..
Heating with mechanical hygrostat HH24-FG *	T2/T5 - HH24-FG
Heating with mechanical thermostat HT24-FG *	T2/T5 - HT24-FG

* only available fitted in separate actuator
** only available fitted in separate actuator, just as further feedback potentiometer units

Electrical installation

Wiring diagram

Notes
- Connect via safety isolation transformer.
- Other actuators can be connected in parallel. Note performance data for supply.

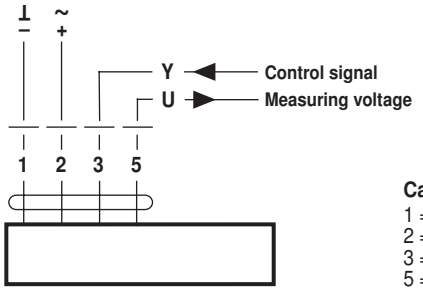

Cable colours:
1 = black
2 = red
3 = white
5 = orange

Functions with basic values

Override control with AC 24 V with relay contacts

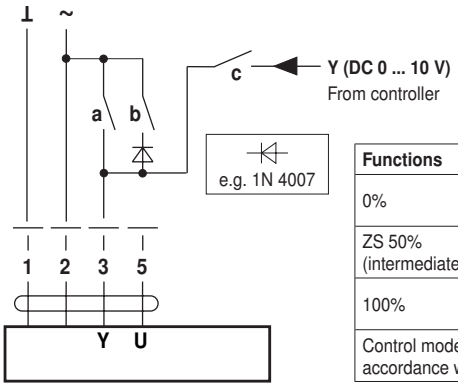

Functions	a	b	c
0%	⁄	⁄	⁄
ZS 50% (intermediate position)	⁄	⊥	⁄
100%	⊥	⁄	⁄
Control mode in accordance with Y	⁄	⁄	⊥

Remote control 0 ... 100 %

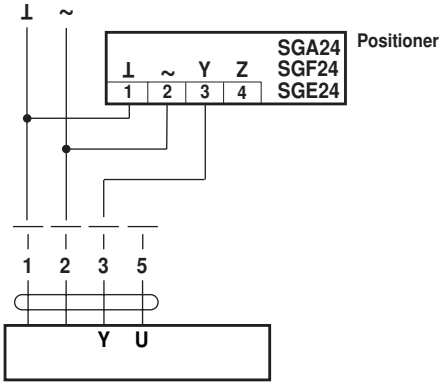

Minimum limit

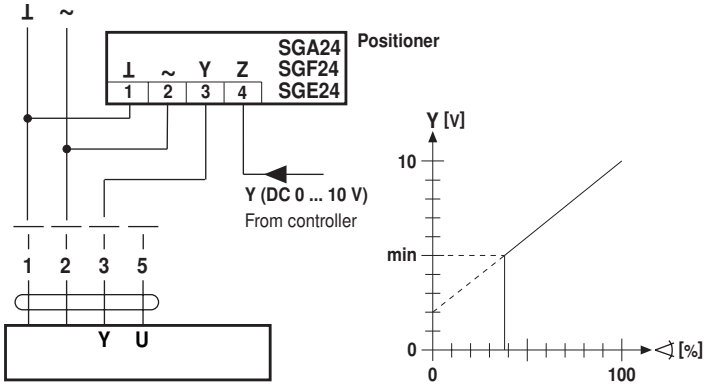

Master/Slave control (position-dependent)

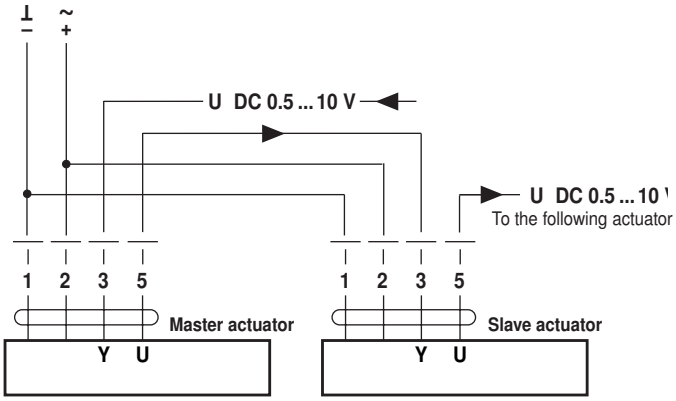

Control with 4 ... 20 mA via external resistance

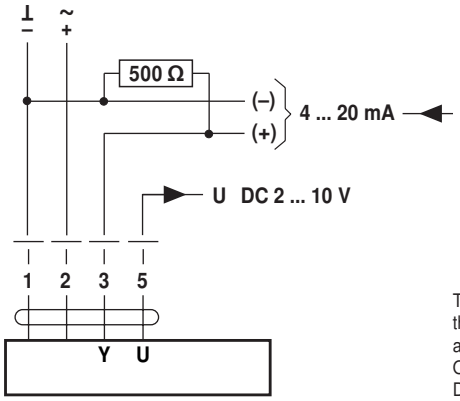

The 500 Ω-resistor converts the 4 ... 20 mA current signal to a voltage signal DC 2 ... 10 V. Operating range adjusted on DC 2...10 V

Position indication

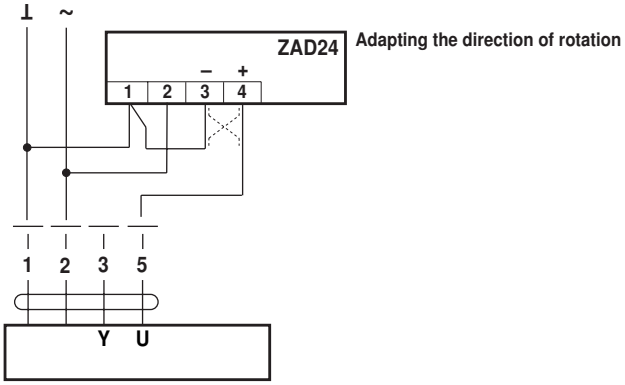

Functional check

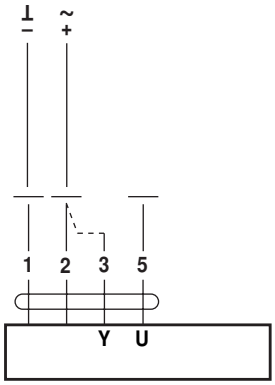

Procedure

- Apply 24 V to connection 1 and 2
- Disconnect connection 3:
  - For direction of rotation 0: Actuator turns in the direction of ↺
  - For direction of rotation 1: Actuator turns in the direction of ↻
- Short circuit connections 2 and 3:
  - Actuator runs in the opposite direction

Functions for actuators with specific parameters

Override control and limiting with AC 24 V with relay contacts

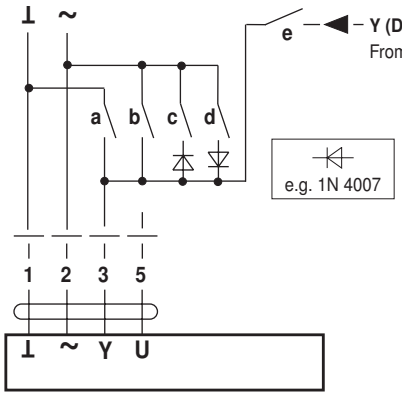

Functions	a	b	c	d	e
CLOSE [1]	⊥	–	–	–	–
MIN	–	–	–	–	–
ZS (intermediate position)	–	–	⊥	–	–
MAX	–	⊥	–	–	–
OPEN	–	–	–	⊥	–
Control mode in accordance with Y	–	–	–	–	⊥

Override control and limiting with AC 24 V with rotary switch

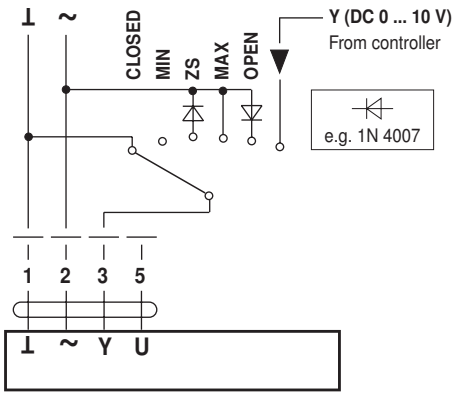

3-point control

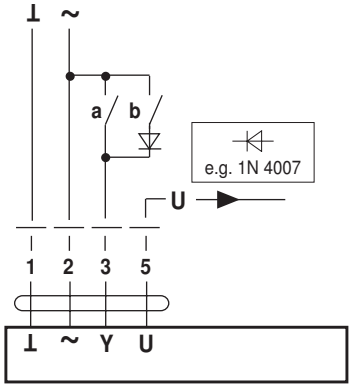

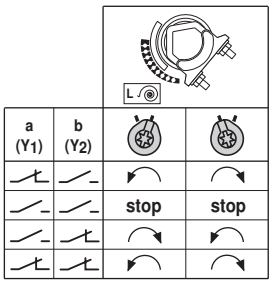

Open-close control

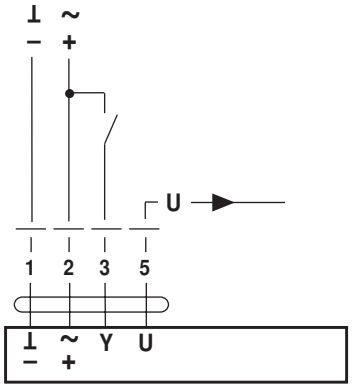

Operating controls and indicators

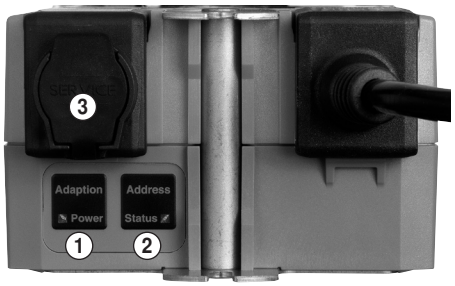

① **Pushbutton and green LED display**

Off:	No voltage supply or malfunction
On:	Operation
Press button:	Switches on angle of rotation adaption followed by standard operation

② **Pushbutton and yellow LED display**

Off:	Standard operation
On:	Adaption or synchronising process active
Press button:	No function

③ **Service plug**

For connecting parameterising and service tools

Check voltage supply connection

a) ① Off and ② On
b) ① Blinking and ② Blinking

} Check the supply connections. Possibly ⏚ and ⏦ are swapped over.

Operating controls The hand crank, interlocking switch and direction of rotation switch are provided on both sides.

Dimensions [mm]

Dimensional drawings

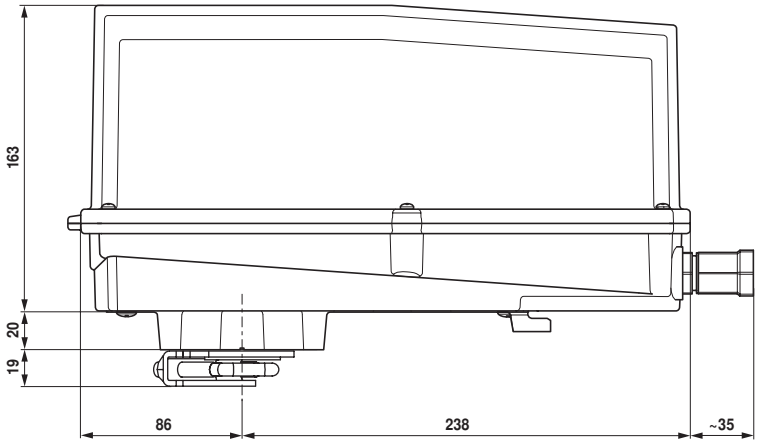

Damper spindle	Length	
	16 ... 105 16 ... 45	12 ... 19 19 ... 26,7

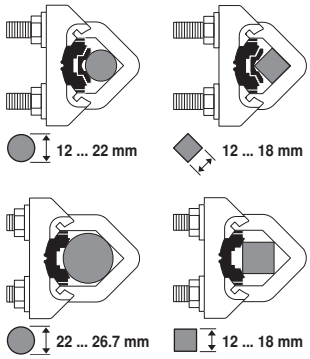

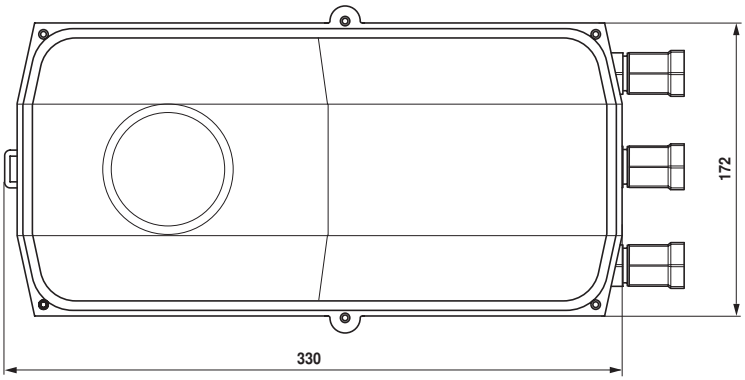

71228-00001.D

1

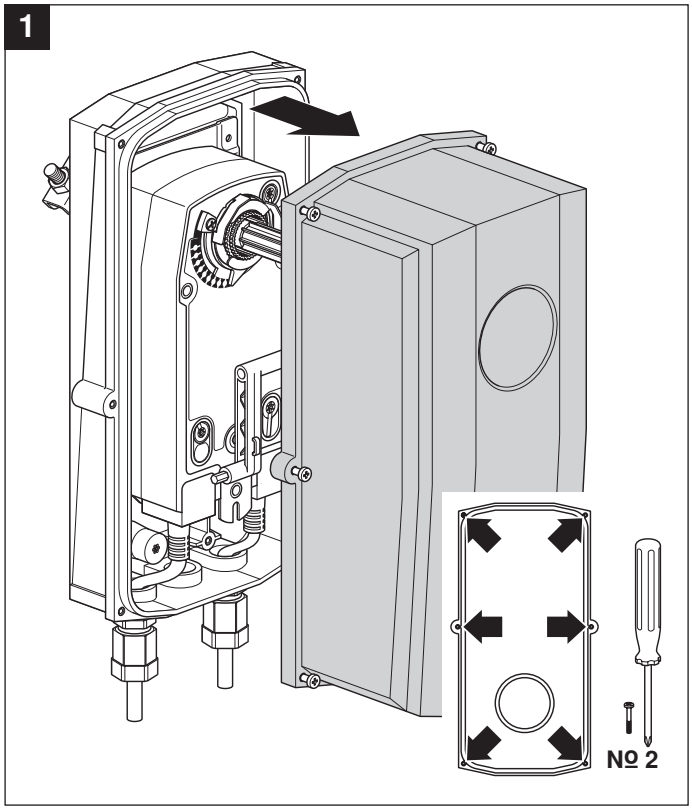

2

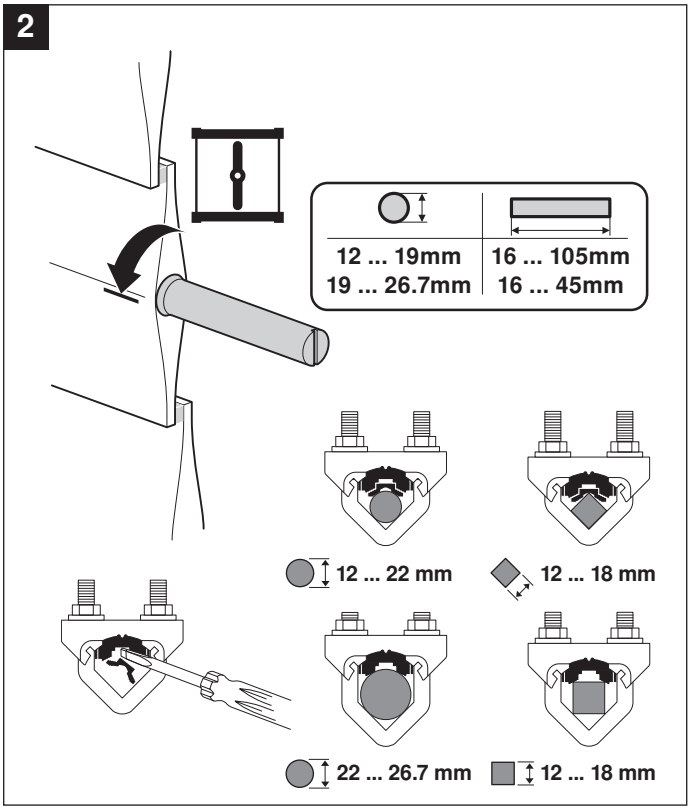

3A

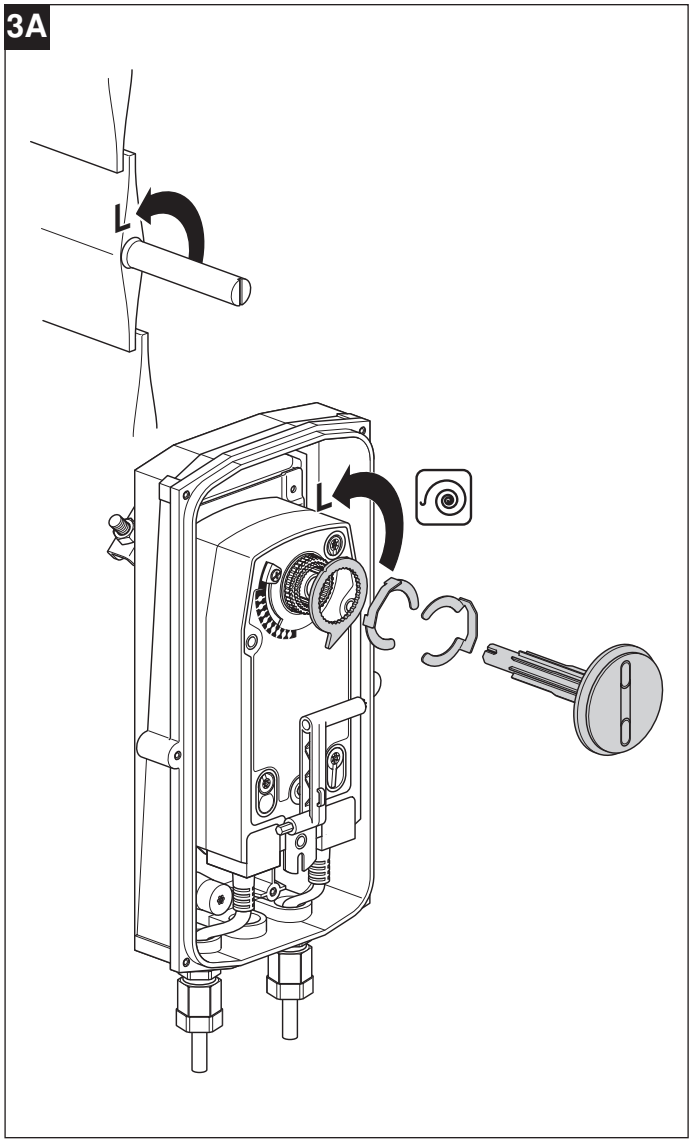

3B

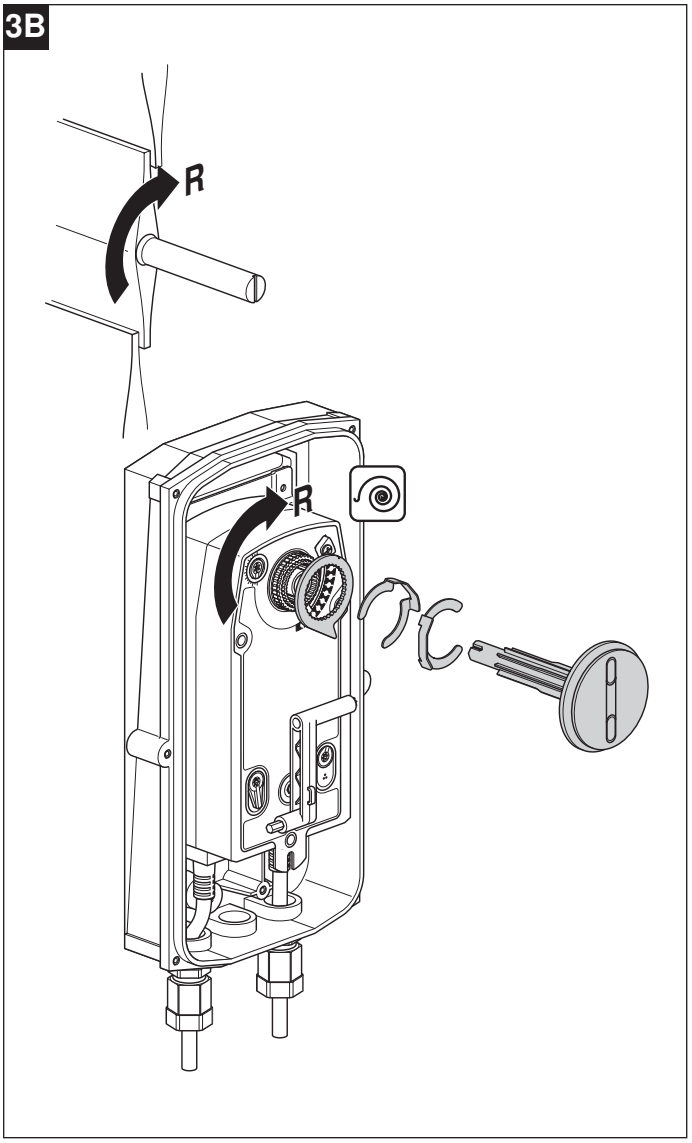

4

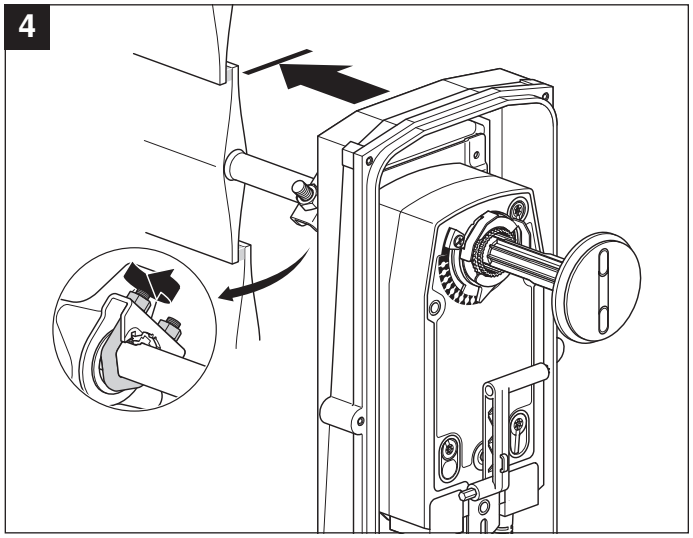

5

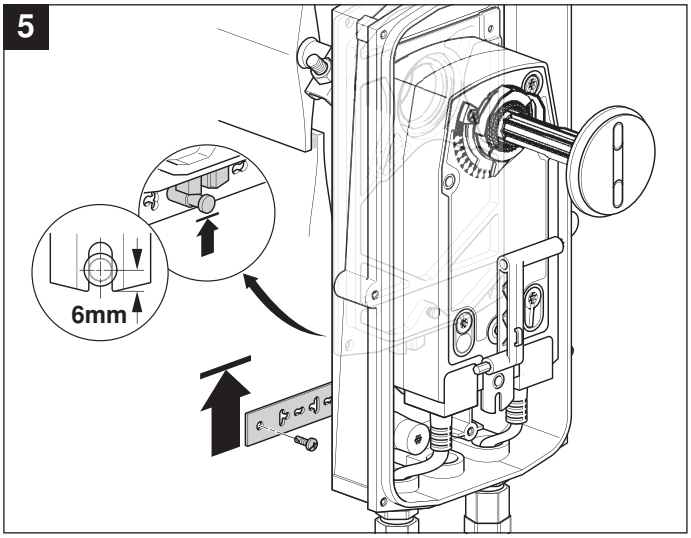

6

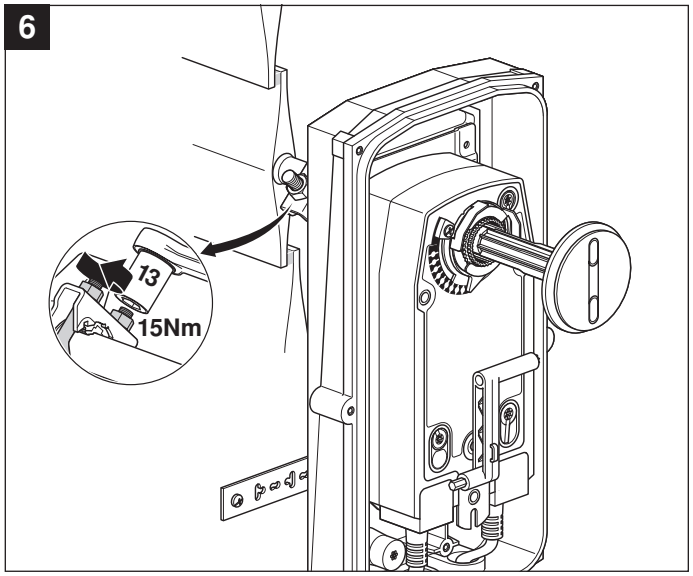

7

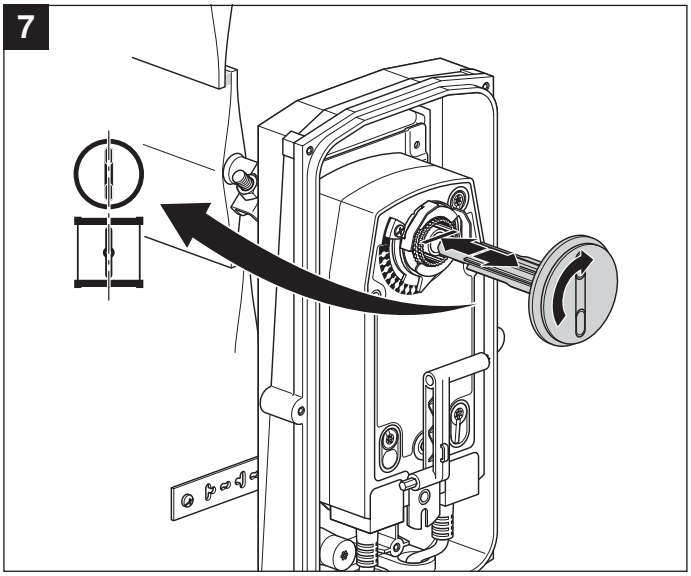

i

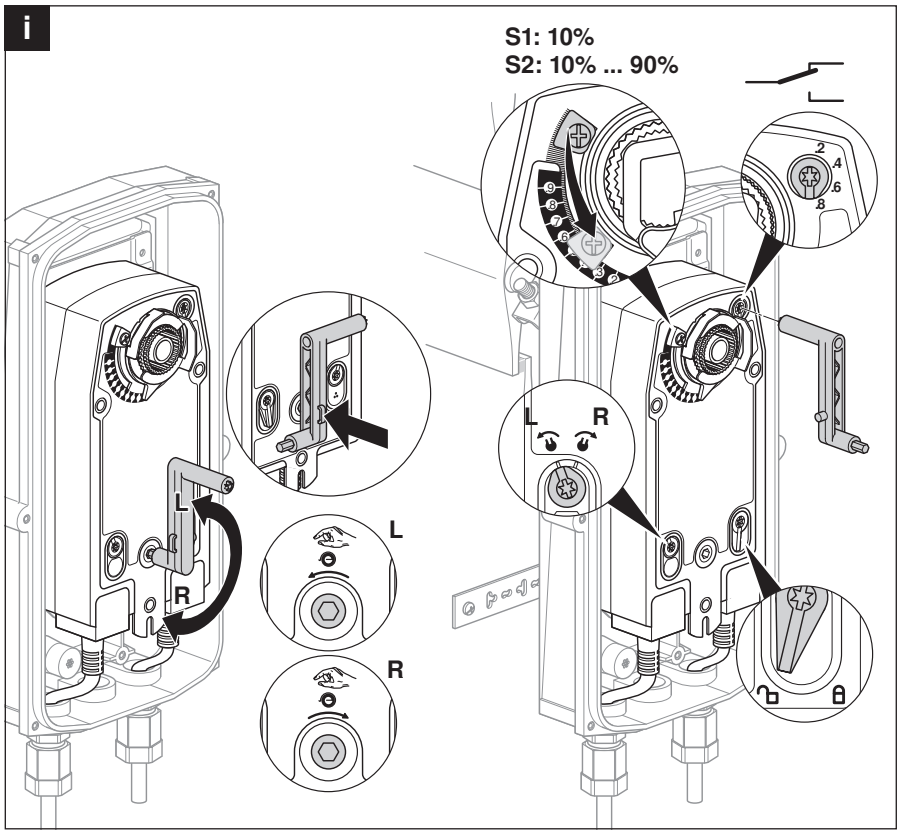

8

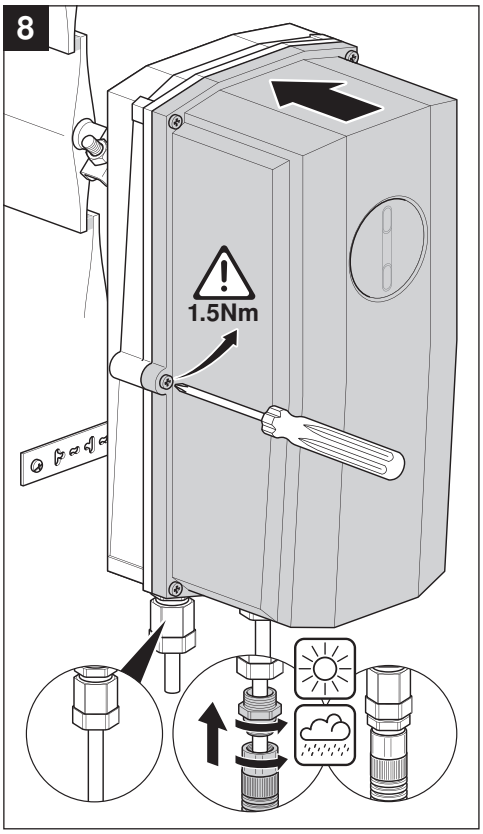

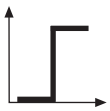

AC 24 ... 240 V
DC 24 ... 125 V

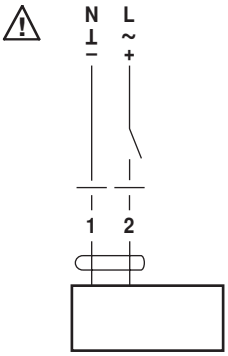

NFG
SFG

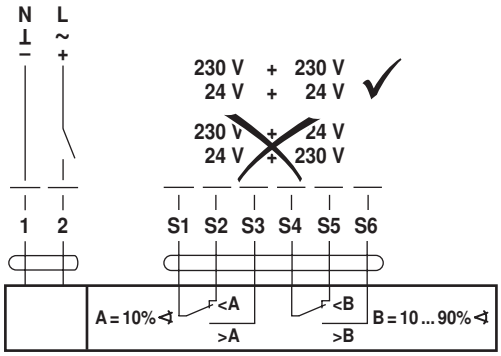

NFG-S2
SFG-S2

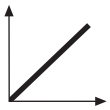

AC 24 V / DC 24 V

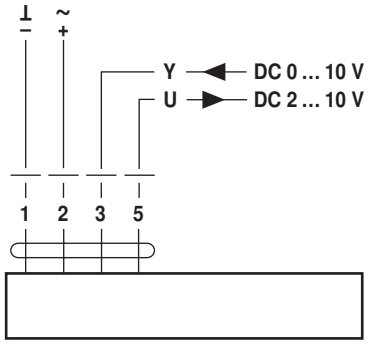

NF24G-SR
NF24G-MF
SF24G-SR
SF24G-MF

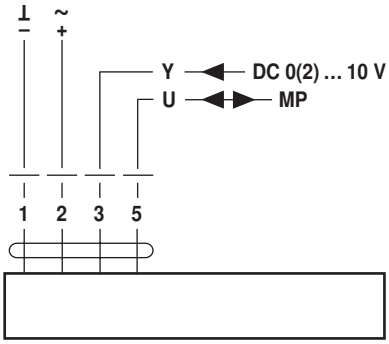

NF24G-MP
SF24G-MP

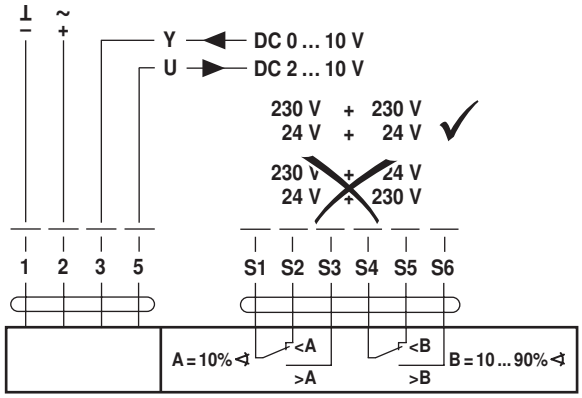

NF24G-SR-S2
SF24G-SR-S2