Parameterisable SuperCap linear actuator with emergency setting function and extended functionalities for adjusting air dampers and sliders in ventilation and air-conditioning systems for building services installations and in laboratories

- **For air dampers up to approx. 3 m²**
- **Actuating force 450 N**
- **Nominal voltage AC/DC 24 V**
- **Control: Modulating DC 0 ... 10 V or variable**
- **Position feedback DC 0 ... 10 V or variable**
- **Height of stroke up to max. 100 mm, adjustable in 20 mm increments**
- **Design life SuperCaps 15 years**

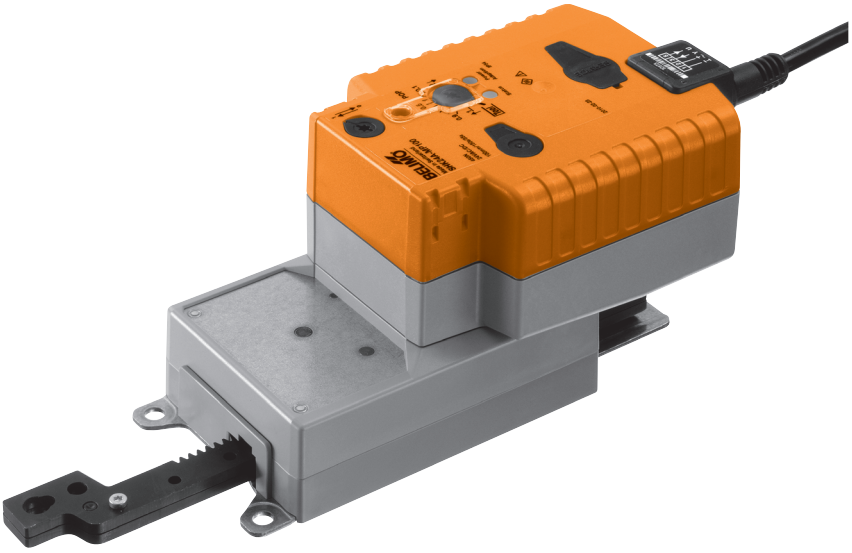

Technical data

Electrical data				
Nominal voltage		AC 24 V, 50/60 Hz / DC 24 V		
Nominal voltage range		AC 19.2 ... 28.8 V / DC 21.6 ... 28.8 V		
Power consumption	In operation	11 W @ nominal torque		
	At rest	3 W		
	For wire sizing	21 VA (I_{max} 20 A @ 5 ms)		
Connection		Cable 1 m, 4 x 0.75 mm²		
Parallel operation		Yes (note the performance data)		
Functional data		**Factory settings**	**Variable**	**Setting**
Actuating force		≥450 N		
Inhibiting force		≥450 N		
Control	Control signal Y	DC 0 … 10 V, input impedance 100 kΩ	Open-close, 3-point (AC only) Modulating (DC 0 ... 32 V)	.....
	Operating range	DC 0.5 ... 10 V	Start point DC 0.5 ... 30 V End point DC 2.5 ... 32 V	.....
Position feedback (Measuring voltage U)		DC 0.5 ... 10 V, max. 0.5 mA	Start point DC 0.5 ... 8 V End point DC 2.5 ... 10 V	.....
Emergency setting position (POP)		0% (POP rotary button end stop, left)	0 ... 100%	.....
Bridging time (PF)		2 s	1 ... 10 s	.....
Position accuracy		±5%		
Direction of stroke	Motor	Reversible with switch 0 / 1		
	Emergency setting position	Reversible with switch 0 ... 100%		
	For Y = 0 V	At switch position 0↓ or 1↑, respectively	Electronically reversible	.....
Manual override		Gearing latch disengaged with push button		
Stroke adjustment		max. 100 mm, adjustable in 20 mm increments, can be limited at both ends with mechanical end stops		
Running time	Standard operation	120 s / 100 mm	90 ... 150 s	
	Emergency setting function	35 s @ 0 ... 50°C		.....
Automatic adjustment of running time, operating range and measuring signal U to match the mechanical stroke adjustment		Manual triggering of the adaption by pressing the «Adaption» button	Automatic adaption whenever the supply voltage is switched on, or manual triggering	.....
Override control		MAX (maximum position) = 100% MIN (minimum position) = 0% ZS (intermediate position, AC only) = 50%	MAX = (MIN + 32%) ... 100% MIN = 0% ... (MAX – 32%) ZS = MIN ... MAX	.....
Sound power level	Standard operation	≤53 dB (A) @ 90 s running time ≤52 dB (A) @ 120 s running time		
	Emergency setting function	≤61 dB (A)		

Terms and abbreviations
POP = Power off position / emergency setting position
PF = Power fail delay time / bridging time

Technical data *(continued)*

Safety	
Protection class	**III** Safety extra-low voltage UL Class 2 Supply
Degree of protection	IP54 NEMA 2, UL Enclosure Type 2
EMC	CE according to 2004/108/EC
Certification	Certified to IEC/EN 60730-1 and IEC/EN 60730-2-14 cULus according to UL 60730-1A and UL 60730-2-14 and CAN/CSA E60730-1:02
Mode of operation	Type 1.AA
Rated impulse voltage	0.8 kV
Control pollution degree	3
Ambient temperature	–30 ... +50°C
Non-operating temperature	–40 ... +80°C
Ambient humidity	95% r.h., non-condensating
Maintenance	Maintenance-free
Dimensions / Weight	
Dimensions	See «Dimensions» on page 8
Weight	Approx. 1.6 kg

Safety notes

- **The actuator is not allowed to be used outside the specified field of application, especially in aircraft or in any other airborne means of transport.**
- **It may only be installed by suitably trained personnel. Any legal regulations or regulations issued by authorities must be observed during installation.**
- **The device may only be opened at the manufacturer's site. It does not contain any parts that can be replaced or repaired by the user.**
- **The cable must not be removed from the device.**
- **The rotary supports and coupling pieces available as accessories must always be used if lateral forces are likely. In addition, the actuator must not be tightly bolted to the application. It must remain movable via the rotary support (refer to «Assembly notes»).**
- **If a rotary support and/or coupling piece is used, then actuating force losses are to be expected.**
- **If the linear actuator is exposed to severely contaminated ambient air, appropriate precautions must be taken on the system side. Excessive deposits of dust, soot etc. can prevent the gear rod from being extended and retracted correctly.**
- **If not installed horizontally, the gear disengagement push button may only be actuated when there is no pressure on the gear rod.**
- **To calculate the actuating force required for air dampers and sliders, the specifications supplied by the damper manufacturers concerning the surface, cross-section, design, installation site and the air flow conditions must be observed.**
- **Self adaptation is necessary when the system is commissioned or whenever the stroke limiting is adjusted (press the adaptation push button).**
- **The device contains electrical and electronic components and is not allowed to be disposed of as household refuse. All locally valid regulations and requirements must be observed.**

Product features

Mode of operation

The actuator moves the air damper to the desired operating position at the same time as the integrated capacitors are loaded. Interrupting the supply voltage causes the air damper to be set back to the emergency setting position by means of stored electrical energy.
The actuator is controlled with a standard modulating signal of DC 0 ... 10 V and travels to the position defined by the control signal. The measuring voltage U serves for the electrical display of the damper position 0 ... 100%.

Pre-charging time (start up)

The capacitor actuators require a pre-charging time. This time is used for charging the capacitors up to a usable voltage level. This ensures that, in the event of a voltage interruption, the actuator can be moved at any time from its current position into the preset emergency setting position (POP).
The duration of the pre-charging time depends mainly on the following factors:
– Duration of the voltage interruption
– PF delay time (bridging time)

Typical pre-charging times

PF delay [s]	Duration of voltage interruption [Days]				
	0	1	2	7	≥10
0	5	8	10	15	19
2	6	9	11	16	20
5	8	11	13	18	22
10	12	15	17	22	26
	Pre-charging time [s]				

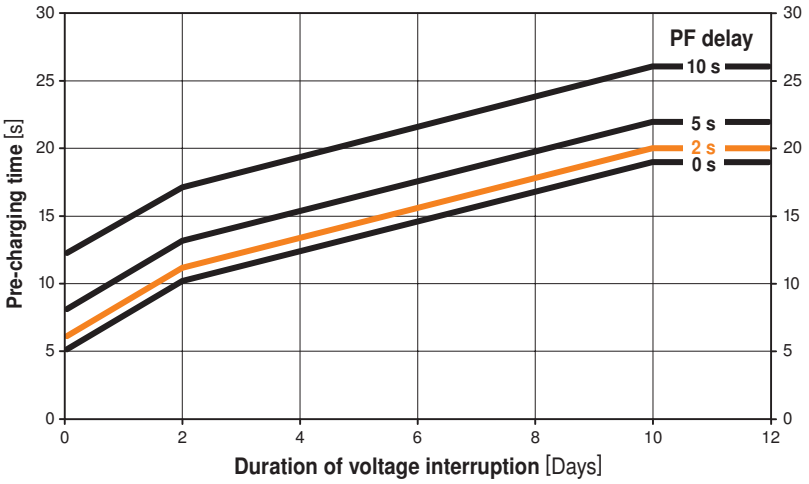

Calculation example:
In the event of a voltage interruption of 3 days and a set bridging time (PF) of 5 s, the actuator requires a pre-charging time of 14 s (see graphic on page 2) after the voltage has been reconnected.

Delivery condition (capacitors)

The actuator is completely discharged after delivery from the factory, which is why the actuator requires approximately 20 s pre-charging time before initial commissioning in order to bring the capacitors up to the required voltage level.

Parameterisable actuators

The factory settings cover the most common applications. Input and output signals and other parameters can be altered with the BELIMO service tool MFT-P or with the ZTH-GEN adjustment and diagnostic tool.

Simple direct mounting

The actuator can be directly connected with the application using the enclosed screws. The head of the gear rod is connected to the moving part of the ventilation application individually on the mounting side or with the Z-KS1 coupling piece provided.

Manual override

Manual override with push button possible (the gear is disengaged for as long as the button remains pressed down).

High functional reliability

The actuator is overload-proof, requires no limit switches and automatically stops when the end stop is reached.

Home position / Start

When the supply voltage is switched on for the first time, i.e. at commissioning or after pressing the "gear disengagement" switch, the actuator moves to the home position.

Pos. direction of stroke	Home position
1 ↑↓ 0 Y = 0	extended
Y = 0	retracted

The actuator then moves into the position defined by the control signal.

Direction of stroke switch

When actuated, the direction of stroke switch changes the running direction in normal operation. The direction of stroke switch has no influence on the emergency setting position (POP) which has been set.

Product features *(continued)*

Emergency setting position (POP) rotary button

The «Emergency setting position» rotary button can be used to adjust the desired emergency setting position (POP) between 0 and 100% in 10% increments.
The rotary button is in reference only to the adapted stroke range between 30 and 100 mm. No set Min or Max values are observed.
In the event of a voltage interruption, the actuator will move into the selected emergency setting position, taking into account the bridging time.

Settings

The rotary button must be set to the «Tool» position for retroactive settings of the emergency setting position with the BELIMO service tool MFT-P.
Once the rotary button is set back to the range 0 … 100%, the manually set value will have positioning authority

Bridging time (PF)

Voltage interruptions can be bridged up to a maximum of 10 s.
In the event of a voltage interruption, the actuator will remain stationary in accordance with the set bridging time. If the voltage interruption is greater than the set bridging time, then the actuator will move into the selected emergency setting position (POP).
The bridging time set ex-works is 2 s. This can be modified at the site of operations with the BELIMO service tool MFT-P or with the ZTH-GEN adjustment and diagnostic device.

Settings

The rotary button must not be set to the «Tool» position!
Only the values need to be entered for retroactive adjustments of the bridging time with the BELIMO service tool MFT-P or with the ZTH-GEN adjustment and diagnostic device.

Accessories

	Description	Data sheet
Electrical accessories	BELIMO service tool MFT-P	
	ZTH-GEN adjustment and diagnostic device	
	Positioner SGA24, SGE24 and SGF24	T2 - SG..24
	Digital position indicator ZAD24	T2 - ZAD24
	Room temperature controller CR24..	S4 - CR24-..
Mechanical accessories	Rotary support to compensate lateral forces Z-DS1	T2 - Z-SH..A..
	Coupling piece Z-KS1	T2 - Z-SH..A..
	End stop set Z-AS1	T2 - Z-SH..A..

Electrical installation

Wiring diagram

Note
Connect via safety isolation transformer.

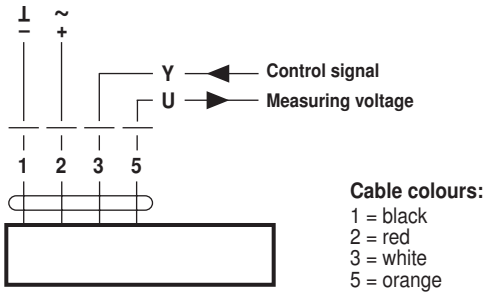

Wiring diagram for parallel operation

Information
- A maximum of eight actuators can be connected in parallel.
- Parallel operation is permitted only on separated axes.
- It is imperative that the performance data be observed with parallel operation.

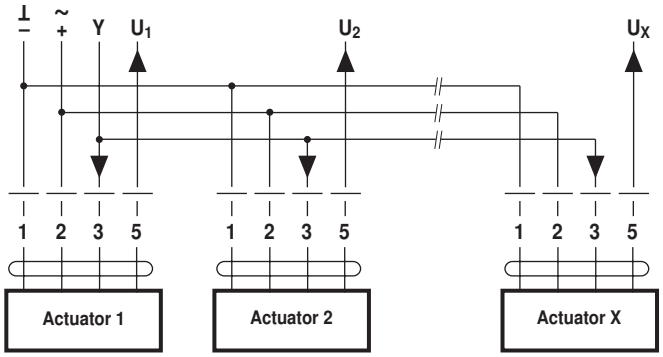

Electrical installation *(continued)*

Cable lengths

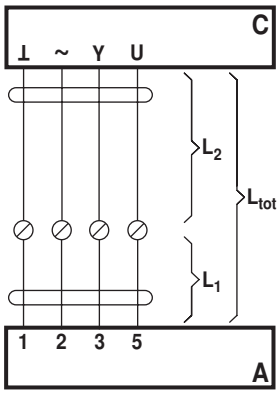

A = Actuator
C = Control unit
L_1 = Belimo connecting cable, 1 m (4 x 0.75 mm²)
L_2 = Customer cable
L_{tot} = Maximum cable length

Cross-section L_2 ⊥ / ~	Max. cable length $L_{tot} = L_1 + L_2$		Example for DC
	AC	DC	
0.75 mm²	≤40 m	≤20 m	1 m (L_1) + 19 m (L_2)
1.00 mm²	≤50 m	≤30 m	1 m (L_1) + 29 m (L_2)
1.50 mm²	≤80 m	≤45 m	1 m (L_1) + 44 m (L_2)
2.50 mm²	≤130 m	≤80 m	1 m (L_1) + 79 m (L_2)

Note
When several actuators are connected in parallel, the maximum cable length must be divided by the number of actuators.

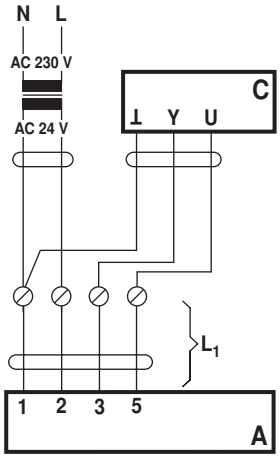

A = Actuator
C = Control unit
L_1 = Belimo connecting cable, 1 m (4 x 0.75 mm²)

Note
There are no special restrictions on installation if the supply and data cable are routed separately.

Functions with basic values

Override control with AC 24 V with relay contacts

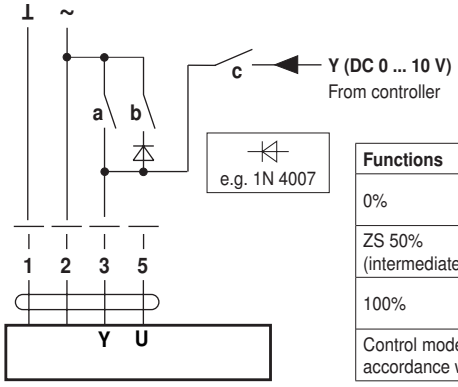

Functions	a	b	c
0%	⁄	⁄	⁄
ZS 50% (intermediate position)	⁄	⊥	⁄
100%	⊥	⁄	⁄
Control mode in accordance with Y	⁄	⁄	⊥

Remote control 0 ... 100%

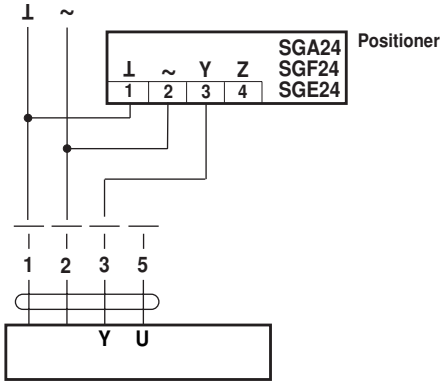

Minimum limit

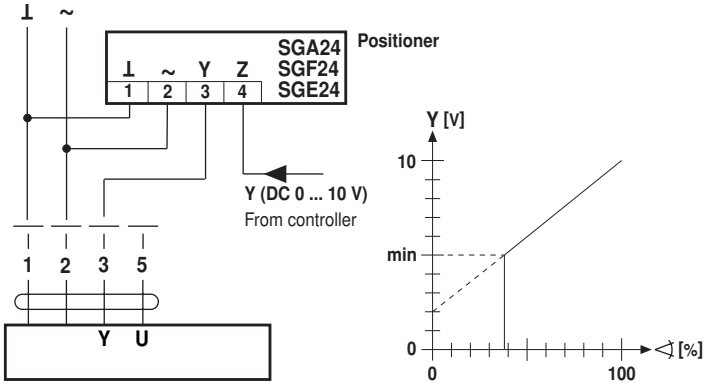

Functions with basic values *(continued)*

Control with 4 ... 20 mA via external resistance

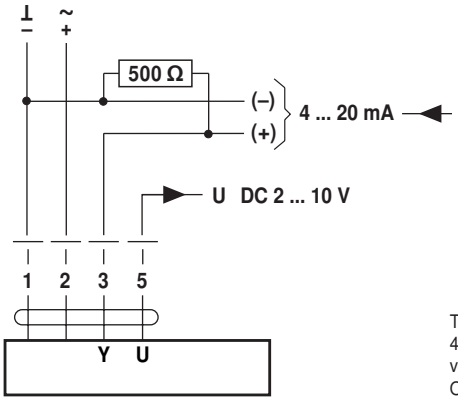

The 500 Ω-resistor converts the 4 ... 20 mA current signal to a voltage signal DC 2 ... 10 V. Operating range set to DC 2 ... 10 V.

Position indication

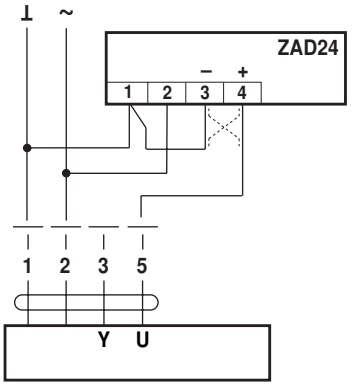

Adapting the direction of rotation

Functional check

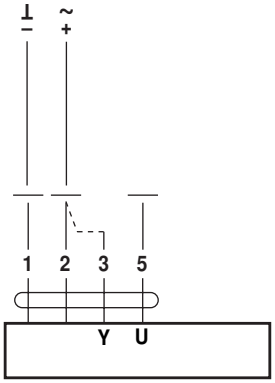

Procedure

- Apply 24 V to connection 1 and 2
- Disconnect connection 3:
  - for stroke direction 0: Actuator moves in direction ↓
  - for stroke direction 1: Actuator moves in direction ↑
- Short circuit connections 2 and 3:
  - Actuator runs in the opposite direction

Functions for actuators with specific parameters

Override control and limiting with AC 24 V with relay contacts

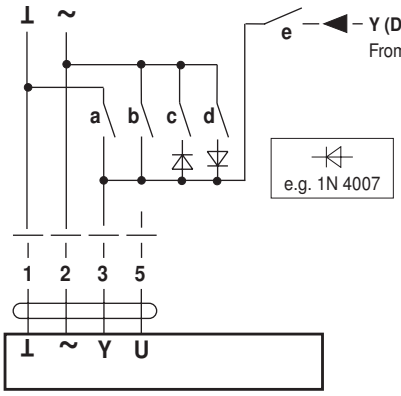

Functions	a	b	c	d	e
CLOSED	⊥	–	–	–	–
MIN	–	–	–	–	–
ZS (intermediate position)	–	–	⊥	–	–
MAX	–	⊥	–	–	–
OPEN	–	–	–	⊥	–
Control mode in accordance with Y	–	–	–	–	⊥

Override control and limiting with AC 24 V with rotary switch

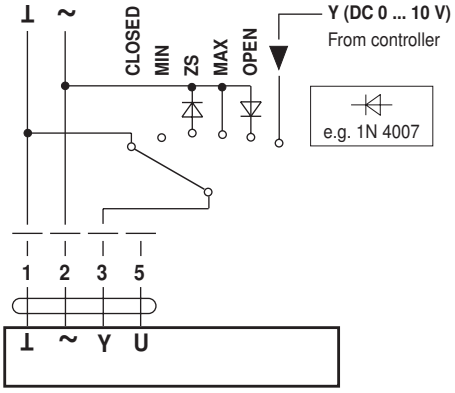

3-point control

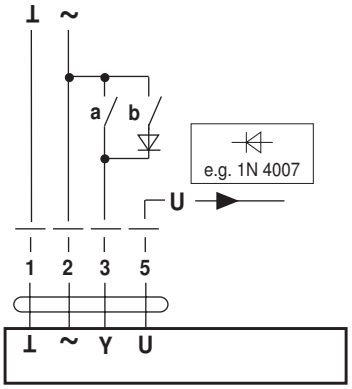

Open-close control

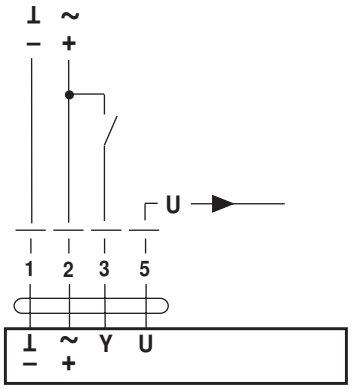

Operating controls and indicators

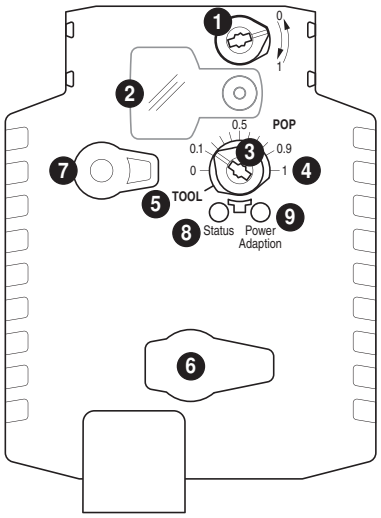

1. Direction of stroke switch
2. Cover, POP button
3. POP button
4. Scale for manual adjustment
5. Position for adjustment with tool
6. Tool socket
7. Disengagement button

LED displays 8 yellow	9 green	Meaning / function
Off	Illuminated	Operation OK / without fault
Off	Blinking	POP function active
Illuminated	Off	Fault SuperCap
Off	Off	– Not in operation – Pre-charging time SuperCap
Illuminated	Illuminated	Adaptation procedure running
Blinking	Illuminated	Communication with programming tool

9. **Press button:** Triggers stroke adaption, followed by standard operation

Setting the POP Power off position

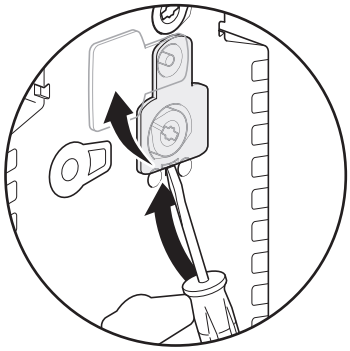

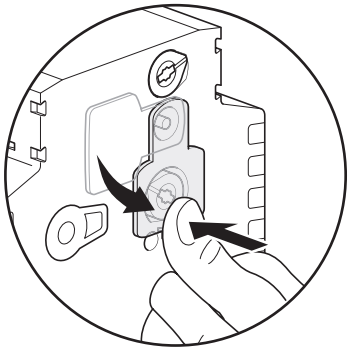

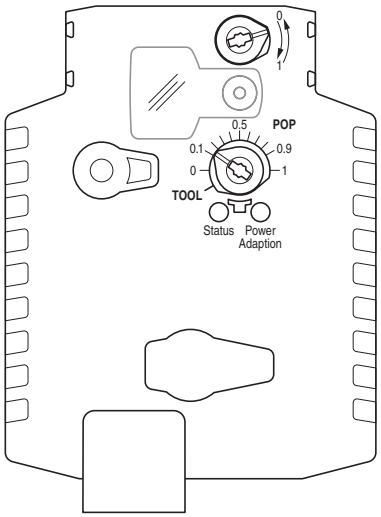

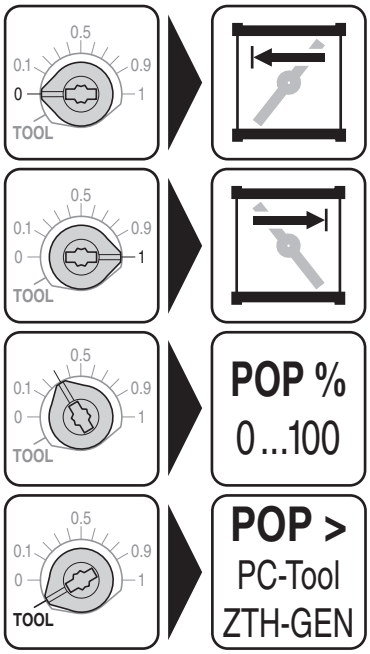

Assembly notes

Application without lateral forces

The linear actuator is screwed directly to the housing at three points. Afterwards, the head of the gear rod is fastened to the moving part of the ventilation application (e.g. damper or slider).

Application with lateral forces

The coupling piece with the internal thread (Z-KS1) is connected to the head of the gear rod. The rotary support (Z-DS1) is screwed to the ventilation application.
Afterwards, the linear actuator is screwed to the previously mounted rotary support with the enclosed screw. Afterwards, the coupling piece, which is mounted to the head of the gear rod, is attached to the moving part of the ventilation application (e.g. damper or slider).
The lateral forces can be compensated for to a certain limit with the rotary support and/or coupling piece. The maximum permissible swivel angle of the rotary support and coupling piece is 10°∢, laterally and upwards.

Caution
If a rotary support and/or coupling piece is used, losses in the actuation force losses are to be expected.

Stroke limitation

If the stroke limitations are used on the gear rod, the mechanical working range can be exploited from an extension length of 20 mm.

Dimensions [mm]

Dimensional drawings

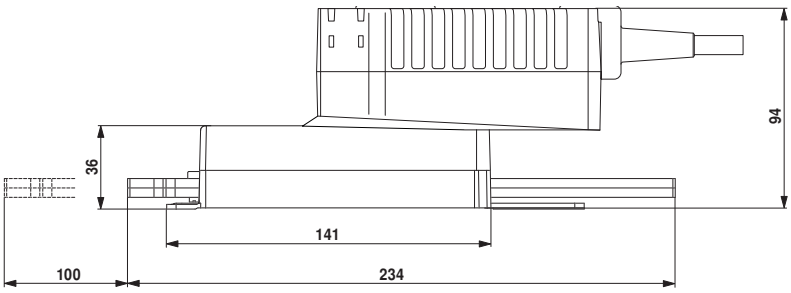

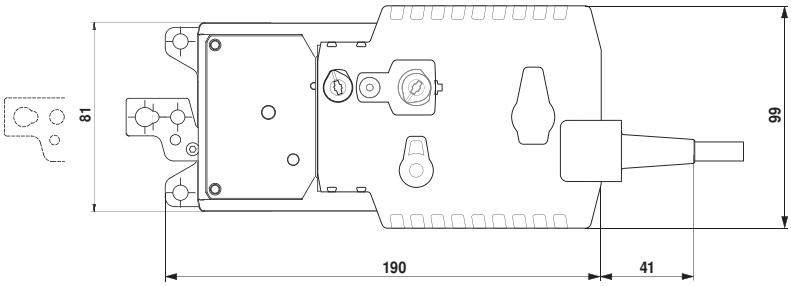

71197-00001.D

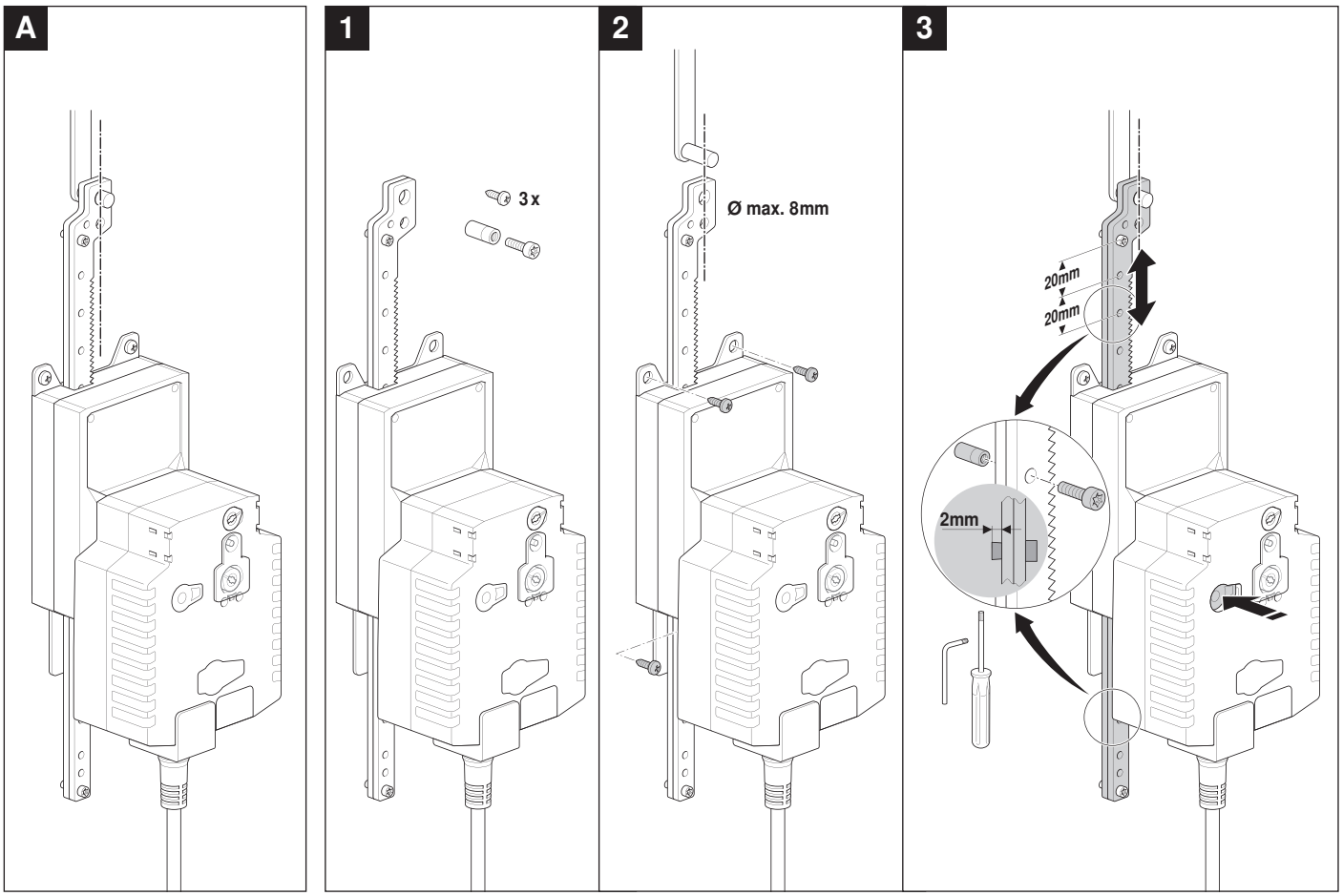

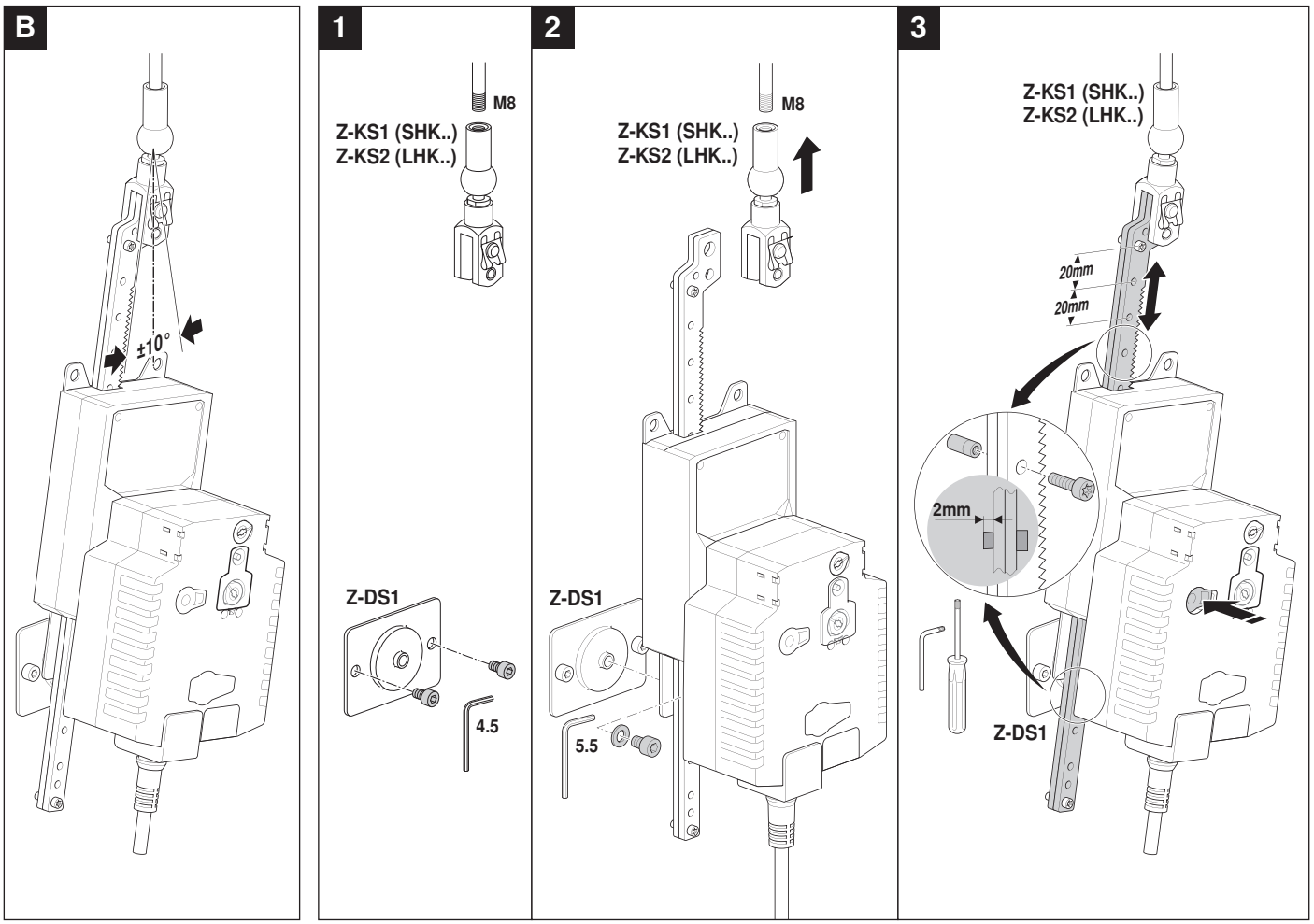

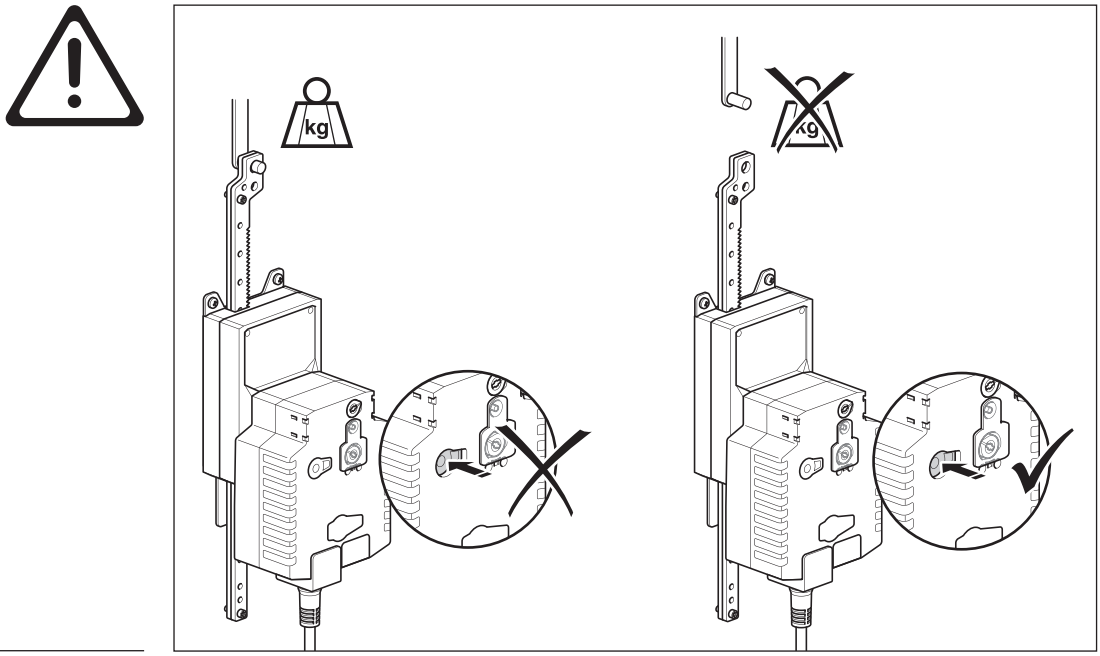

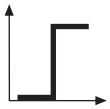

AC 24 V / DC 24 V

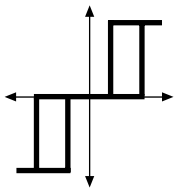

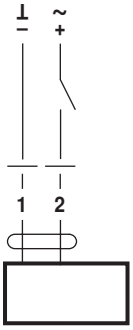

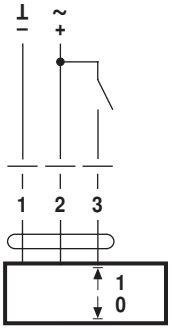

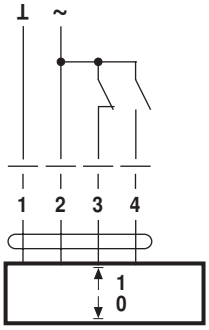

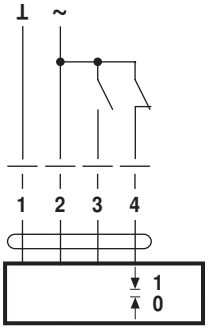

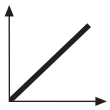
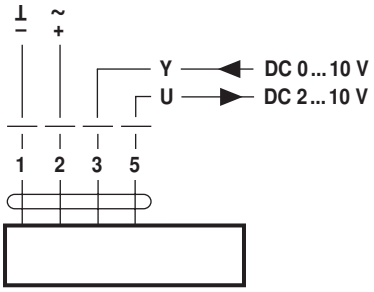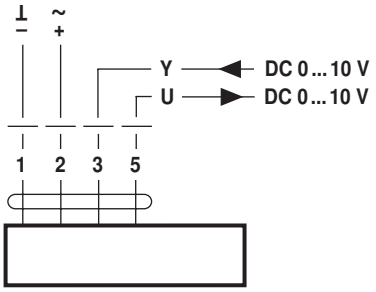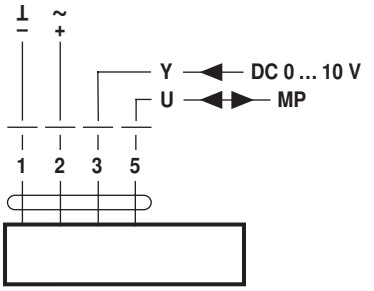
AC 24 V / DC 24 V