**Modulating SuperCap linear actuator with emergency setting function and extended functionalities for adjusting air dampers and sliders in ventilation and air-conditioning systems for building services installations and in laboratories**

- **For air dampers up to approx. 3 m²**
- **Actuating force 450 N**
- **Nominal voltage AC/DC 24 V**
- **Control: Modulating DC 0 ... 10 V**
- **Position feedback DC 0 ... 10 V**
- **Height of stroke up to max. 100 mm, adjustable in 20 mm increments**
- **Design life SuperCaps 15 years**

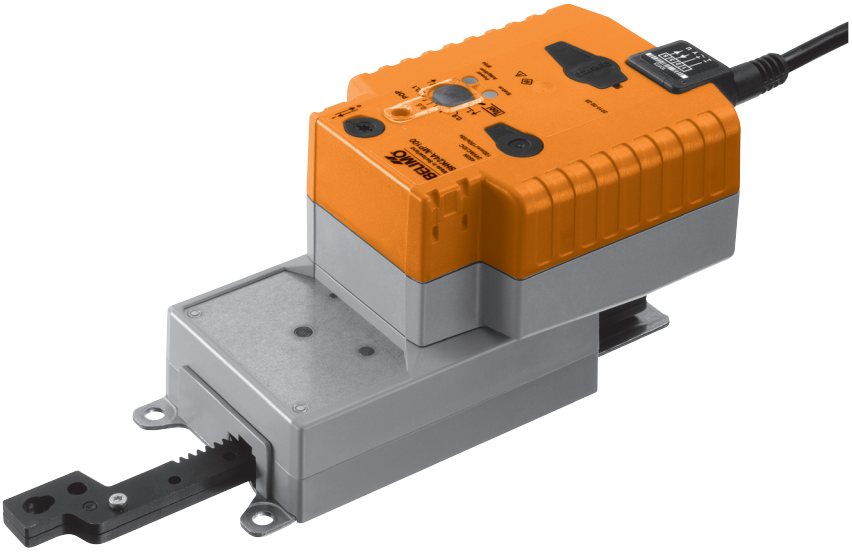

## Technical data

| | | | |
|---|---|---|---|
| **Electrical data** | Nominal voltage | | AC 24 V, 50/60 Hz / DC 24 V |
| | Nominal voltage range | | AC 19.2 ... 28.8 V / DC 21.6 ... 28.8 V |
| | Power consumption | In operation | 11 W @ nominal torque |
| | | At rest | 3 W |
| | | For wire sizing | 21 VA ($I_{max}$ 20 A @ 5 ms) |
| | Connection | | Cable 1 m, 4 x 0.75 mm² |
| **Functional data** | Actuating force | | ≥450 N |
| | Inhibiting force | | ≥450 N |
| | Control | Control signal Y | DC 0 … 10 V, input impedance 100 kΩ |
| | | Operating range | DC 0.5 ... 10 V |
| | Position feedback (Measuring voltage U) | | DC 0.5 ... 10 V, max. 0.5 mA |
| | Emergency setting position (POP) | | 0 ... 100%, adjustable (POP rotary button) of the maximum height of stroke |
| | Bridging time with electricity interruption | | 2 s |
| | Position accuracy | | ±5% |
| | Direction of stroke | Motor | Reversible with switch 0 / 1 |
| | | Emergency setting position | Reversible with switch 0 ... 100% (retracted 0%) |
| | | For Y = 0 V | At switch position 0 ↓ or 1 ↑, respectively |
| | Manual override | | Gearing latch disengaged with push button |
| | Stroke adjustment | | max. 100 mm, adjustable in 20 mm increments, can be limited at both ends with mechanical end stops |
| | Running time | Motor | 120 s / 100 mm |
| | | Emergency setting function | 35 s @ 0 ... 50°C |
| | Sound power level | Motor | ≤53 dB (A) @ 90 s running time<br>≤52 dB (A) @ 120 s running time |
| | | Emergency setting function | ≤61 dB (A) |
| **Safety** | Protection class | | **III** Safety extra-low voltage<br>UL Class 2 Supply |
| | Degree of protection | | IP54<br>NEMA 2, UL Enclosure Type 2 |
| | EMC | | CE according to 2004/108/EC |
| | Certification | | Certified to IEC/EN 60730-1 and IEC/EN 60730-2-14<br>cULus according to UL 60730-1A and UL 60730-2-14 and CAN/CSA E60730-1:02 |
| | Mode of operation | | Type 1.AA |
| | Rated impulse voltage | | 0.8 kV |
| | Control pollution degree | | 3 |
| | Ambient temperature | | –30 ... +50°C |
| | Non-operating temperature | | –40 ... +80°C |
| | Ambient humidity | | 95% r.h., non-condensating |
| | Maintenance | | Maintenance-free |

**Terms and abbreviations**

POP = Power off position / emergency setting position
PF = Power fail delay time / bridging time

## Technical data *(continued)*

**Dimensions / Weight**

| | |
|---|---|
| Dimensions | See «Dimensions» on page 6 |
| Weight | Approx. 1.6 kg |

## Safety notes

- **The actuator is not allowed to be used outside the specified field of application, especially in aircraft or in any other airborne means of transport.**
- **It may only be installed by suitably trained personnel. Any legal regulations or regulations issued by authorities must be observed during installation.**
- **The device may only be opened at the manufacturer's site. It does not contain any parts that can be replaced or repaired by the user.**
- **The cable must not be removed from the device.**
- **The rotary supports and coupling pieces available as accessories must always be used if lateral forces are likely. In addition, the actuator must not be tightly bolted to the application. It must remain movable via the rotary support (refer to «Assembly notes»).**
- **If a rotary support and/or coupling piece is used, then actuation force losses are to be expected.**
- **If the linear actuator is exposed to severely contaminated ambient air, appropriate precautions must be taken on the system side. Excessive deposits of dust, soot etc. can prevent the gear rod from being extended and retracted correctly.**
- **If not installed horizontally, the gear disengagement push button may only be actuated when there is no pressure on the gear rod.**
- **To calculate the actuating force required for air dampers and sliders, the specifications supplied by the damper manufacturers concerning the surface, cross-section, design, installation site and the air flow conditions must be observed.**
- **The device contains electrical and electronic components and is not allowed to be disposed of as household refuse. All locally valid regulations and requirements must be observed.**

## Product features

**Mode of operation**

The actuator moves the air damper to the desired operating position at the same time as the integrated capacitors are loaded. Interrupting the supply voltage causes the air damper to be set to the selected emergency setting position (POP) by means of stored electrical energy.
The actuator is connected with a standard modulating signal of DC 0 ... 10V and travels to the position defined by the positioning signal. The measuring voltage U serves for the electrical display of the damper position 0 ... 100%.

**Pre-charging time (start up)**

The capacitor actuators require a pre-charging time. This time is used for charging the capacitors up to a usable voltage level. This ensures that, in the event of a voltage interruption, the actuator can be moved at any time from its current position into the preset emergency setting position (POP).
The duration of the pre-charging time depends mainly on how long the power was interrupted.

Typical pre-charging times

| | Duration of voltage interruption [Days] | | | | |
|---|---|---|---|---|---|
| | 0 | 1 | 2 | 7 | ≥10 |
| Pre-charging time [s] | 6 | 9 | 11 | 16 | 20 |

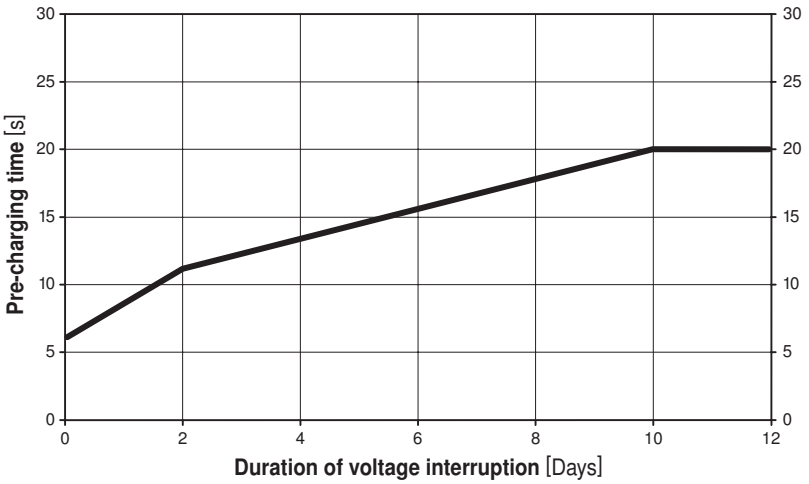

## Product features *(continued)*

**Delivery condition (capacitors)**

The actuator is completely discharged after delivery from the factory, which is why the actuator requires approximately 20 s pre-charging time before initial commissioning in order to bring the capacitors up to the required voltage level.

**Simple direct mounting**

The actuator can be directly connected with the application using the enclosed screws. The head of the gear rod is connected to the moving part of the ventilation application individually on the mounting side or with the Z-KS1 coupling piece provided.

**Manual override**

Manual override with push button possible (the gear is disengaged for as long as the button remains pressed down).

**High functional reliability**

The actuator is overload-proof, requires no limit switches and automatically stops when the end stop is reached.

**Home position / Start**

After the supply voltage has been switched on, the actuator moves into the position defined by the positioning signal.

| Pos. direction of stroke | Home position |
|---|---|
| 1 ↑↓ 0 Y = 0 | extended |
| Y = 0 | retracted |

**Direction of stroke switch**

When actuated, the direction of stroke switch changes the running direction in normal operation. The direction of stroke switch has no influence on the emergency setting position (POP) which has been set.

**Emergency setting position (POP) rotary button**

The «Emergency setting position» rotary button can be used to adjust the desired emergency setting position (POP). The POP range is in reference to the maximum height of stroke of the actuator.
In the event of a voltage interruption, the actuator will move into the selected emergency setting position, taking into account the bridging time (PF) of 2 s which was set ex-works.

**Adjustable stroke**

The stroke range can be adjusted on both sides in increments of 20 mm by means of mechanical end stops.
A minimum permissible stroke of about 20 mm must be allowed for when using external end stops.

## Accessories

| | Description | Data sheet |
|---|---|---|
| **Electrical accessories** | Positioner SGA24, SGE24 and SGF24 | T2 - SG..24 |
| | Digital position indicator ZAD24 | T2 - ZAD24 |
| | Room temperature controller CR24.. | S4 - CR24-.. |
| **Mechanical accessories** | Rotary support to compensate lateral forces Z-DS1 | T2 - Z-SH..A.. |
| | Coupling piece Z-KS1 | T2 - Z-SH..A.. |
| | End stop set Z-AS1 | T2 - Z-SH..A.. |

## Electrical installation

### Wiring diagram

**Note**
Connect via safety isolation transformer.

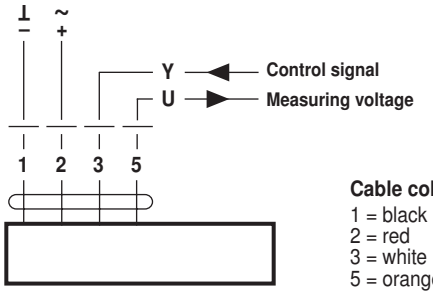


**Cable colours:**
1 = black
2 = red
3 = white
5 = orange

### Wiring diagram for parallel operation

**Information**
- A maximum of eight actuators can be connected in parallel.
- Parallel operation is permitted only on separated axes.
- It is imperative that the performance data be observed with parallel operation.

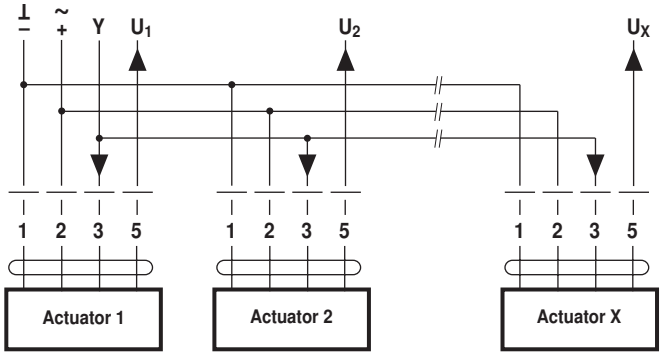


### Cable lengths

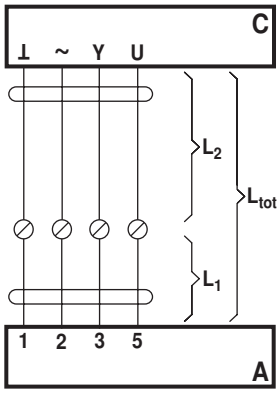


A = Actuator
C = Control unit
$L_1$ = Belimo connecting cable, 1 m (4 x 0.75 mm²)
$L_2$ = Customer cable
$L_{tot}$ = Maximum cable length

| Cross-section $L_2$ ⊥ / ~ | Max. cable length $L_{tot} = L_1 + L_2$ | | Example for DC |
|---|---|---|---|
| | AC | DC | |
| 0.75 mm² | ≤40 m | ≤20 m | 1 m ($L_1$) + 19 m ($L_2$) |
| 1.00 mm² | ≤50 m | ≤30 m | 1 m ($L_1$) + 29 m ($L_2$) |
| 1.50 mm² | ≤80 m | ≤45 m | 1 m ($L_1$) + 44 m ($L_2$) |
| 2.50 mm² | ≤130 m | ≤80 m | 1 m ($L_1$) + 79 m ($L_2$) |

**Note**
When several actuators are connected in parallel, the maximum cable length must be divided by the number of actuators.

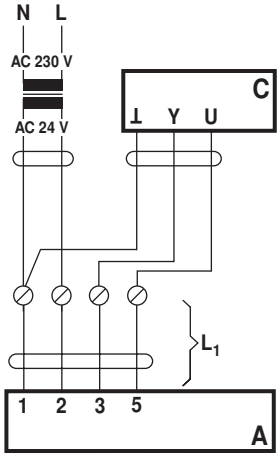


A = Actuator
C = Control unit
$L_1$ = Belimo connecting cable, 1 m (4 x 0.75 mm²)

**Note**
There are no special restrictions on installation if the supply and data cable are routed separately.

## Operating controls and indicators

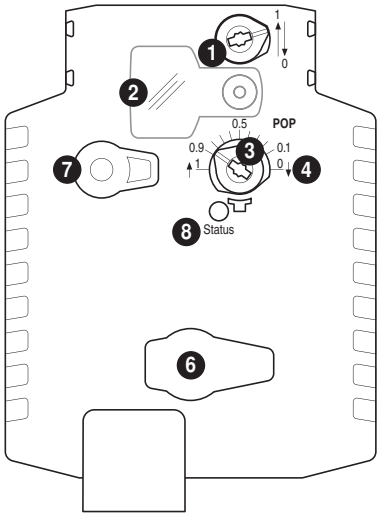


1. **Direction of stroke switch**
2. **Cover, POP button**
3. **POP button**
4. **Scale for manual adjustment**

6. (no function)
7. **Disengagement button**

| LED display 8 green | Meaning / function |
|---|---|
| Illuminated | Operation OK / without fault |
| Blinking | POP function active |
| Off | – Not in operation<br>– Pre-charging time SuperCap<br>– Fault SuperCap |

**Setting the POP Power off position**

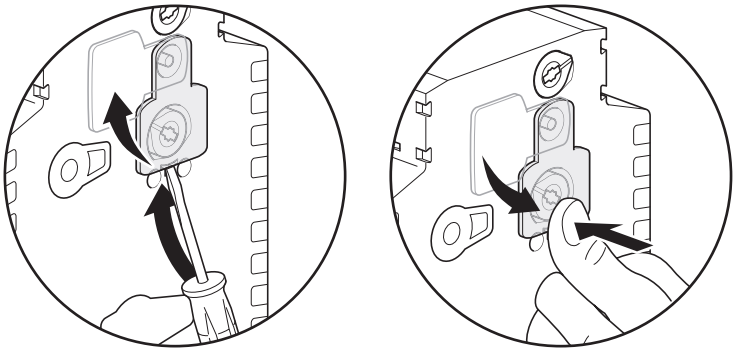

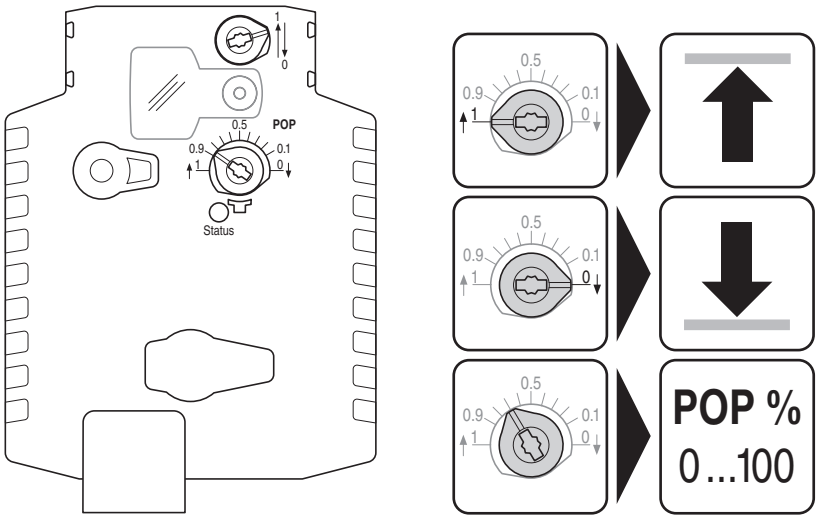

## Assembly notes

**Application without lateral forces**

The linear actuator is screwed directly to the housing at three points. Afterwards, the head of the gear rod is fastened to the moving part of the ventilation application (e.g. damper or slider).

**Application with lateral forces**

The coupling piece with the internal thread (Z-KS1) is connected to the head of the gear rod. The rotary support (Z-DS1) is screwed to the ventilation application.
Afterwards, the linear actuator is screwed to the previously mounted rotary support with the enclosed screw. Afterwards, the coupling piece, which is mounted to the head of the gear rod, is attached to the moving part of the ventilation application (e.g. damper or slider).
The lateral forces can be compensated for to a certain limit with the rotary support and/or coupling piece. The maximum permissible swivel angle of the rotary support and coupling piece is 10°∢, laterally and upwards.

**Caution**
If a rotary support and/or coupling piece is used, losses in the actuation force losses are to be expected.

**Stroke limitation**

If the stroke limitations are used on the gear rod, the mechanical working range can be exploited from an extension length of 20 mm.

## Dimensions [mm]

**Dimensional drawings**

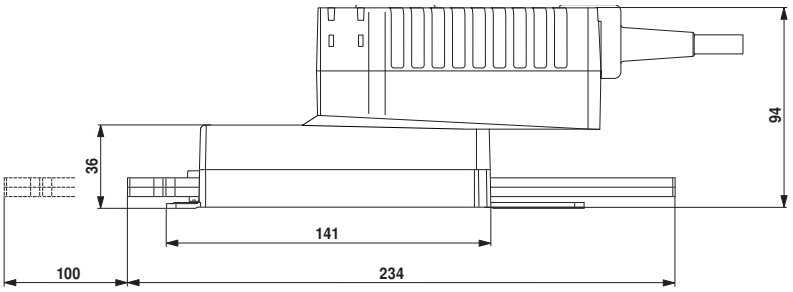


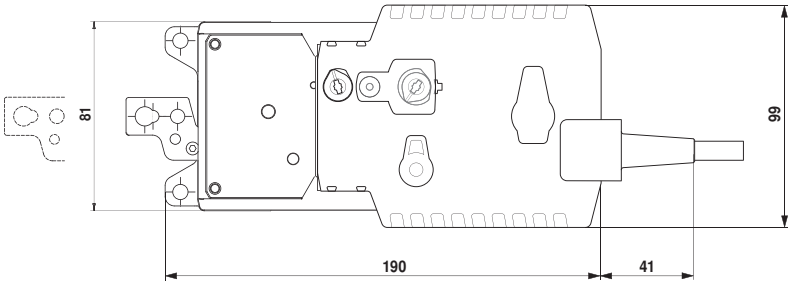

71197-00001.D

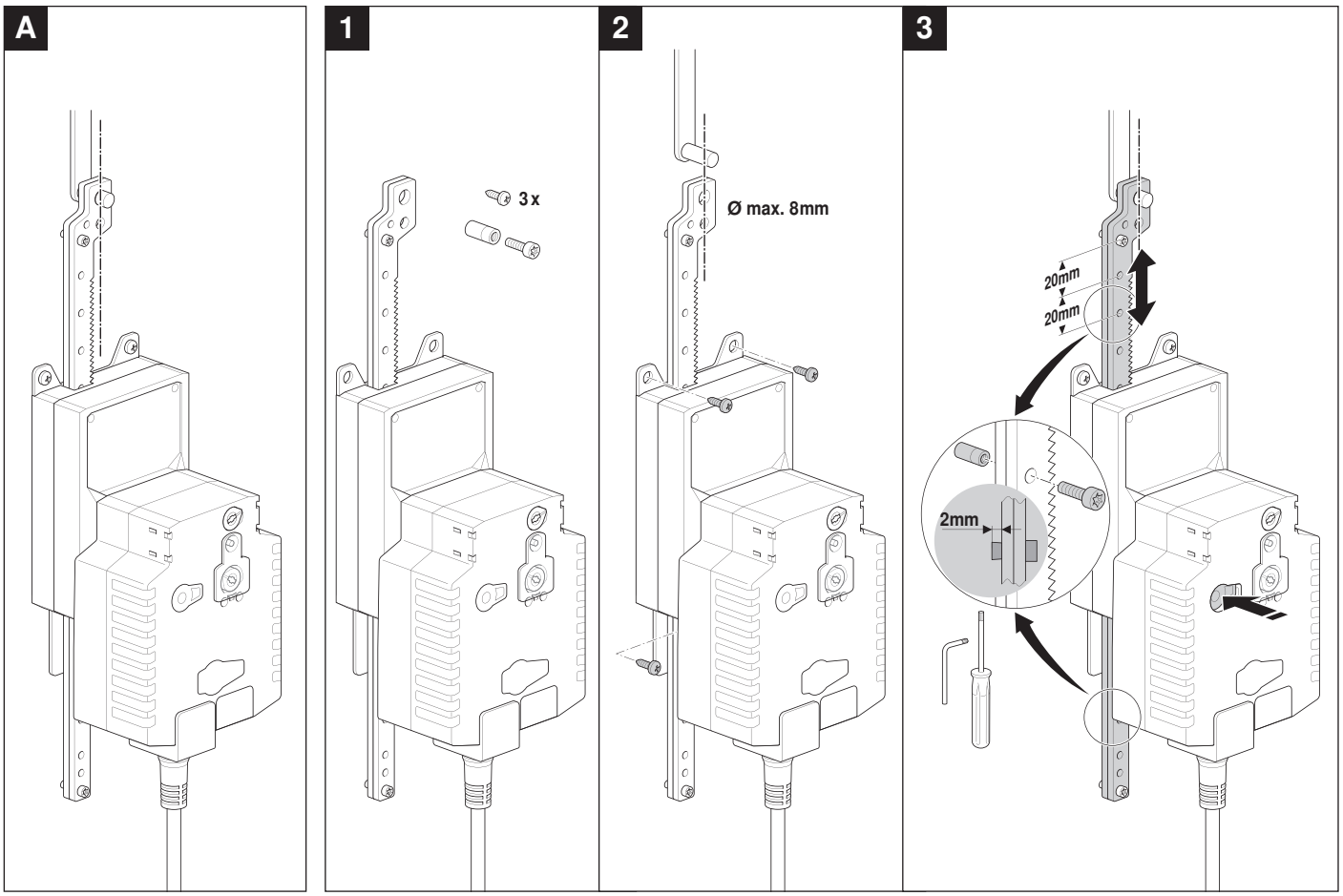


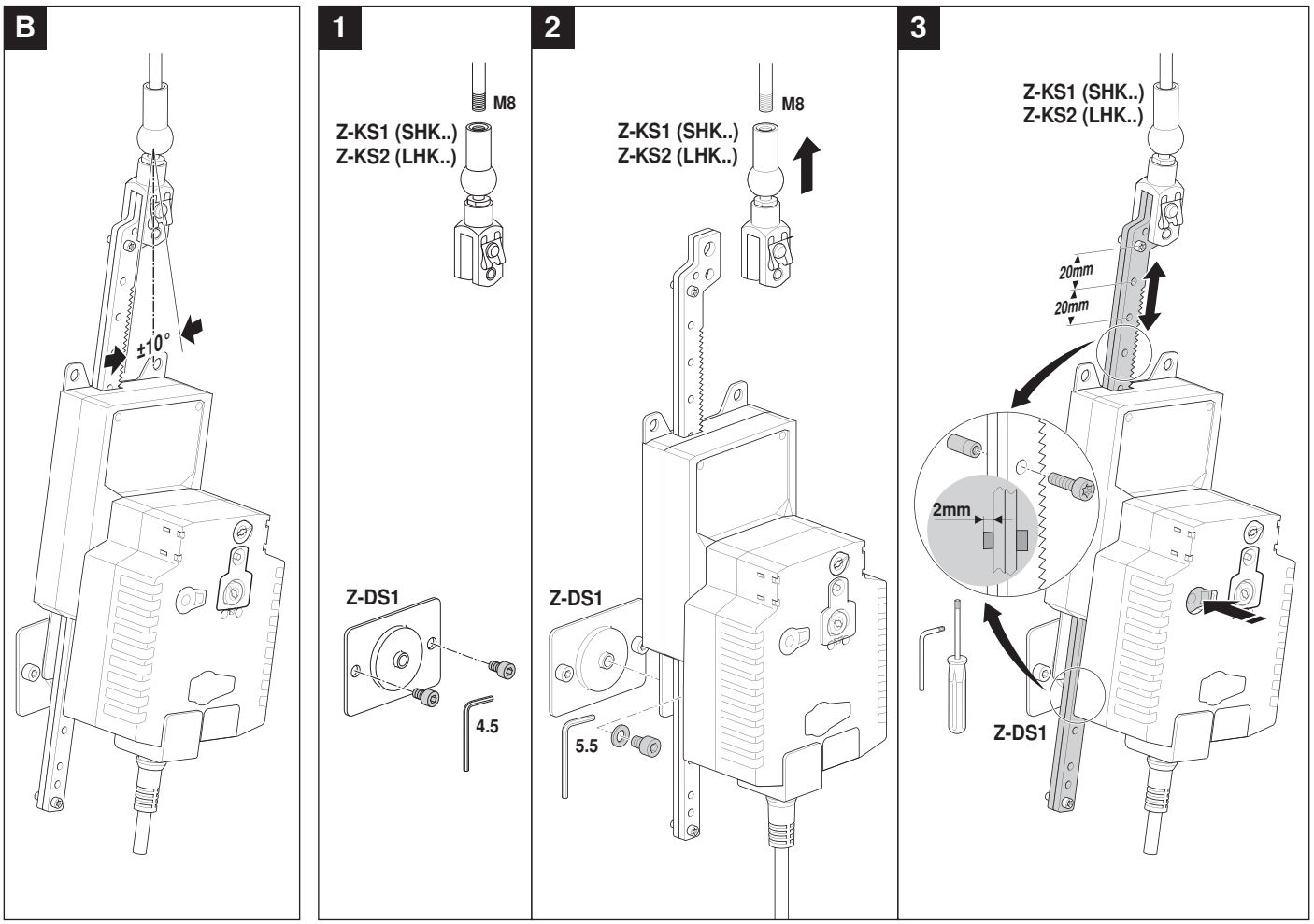

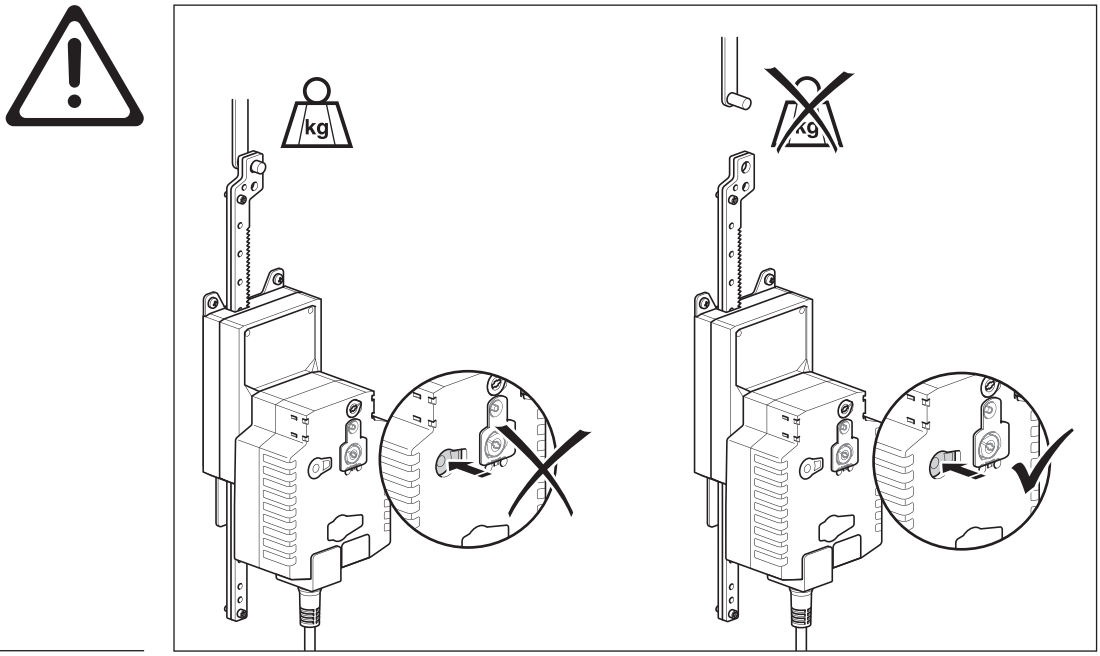


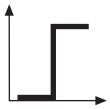

**AC 24 V / DC 24 V**

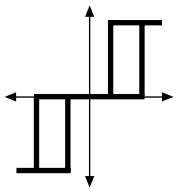

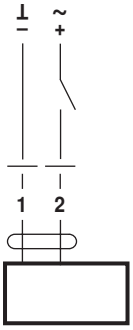


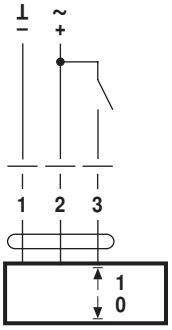


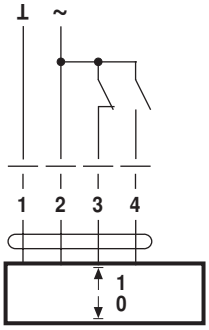


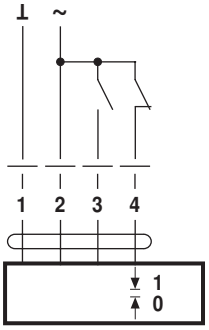


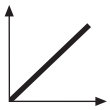
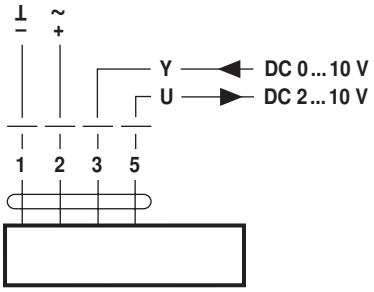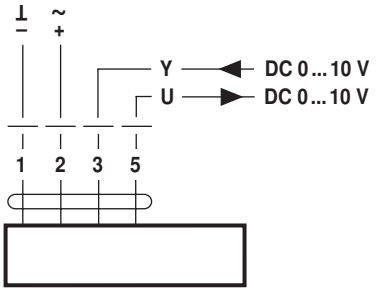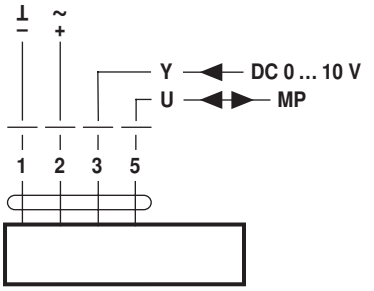
**AC 24 V / DC 24 V**