Parameterisable damper actuator for adjusting air control dampers in ventilation and air-conditioning systems for building services installations

- **For air dampers up to approx. 3.2 m²**
- **Torque 16 Nm**
- **Nominal voltage AC/DC 24 V**
- **Control: modulating DC 0 ... 10 V or variable**
- **Position feedback DC 2 ... 10 V or variable**
- **Running time 7 s or variable**

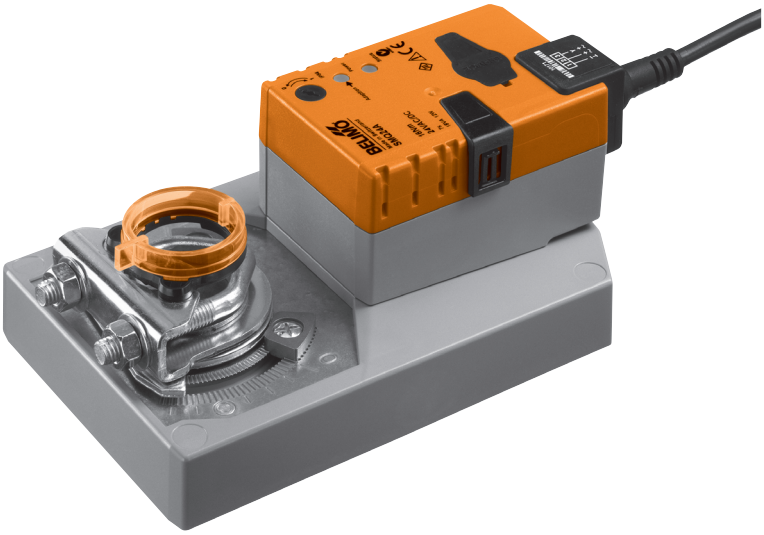

Technical data

Electrical data			
Nominal voltage	AC 24 V, 50/60 Hz / DC 24 V		
Nominal voltage range	AC 19.2 ... 28.8 V / DC 21.6 ... 28.8 V		
Power consumption In operation	15 W @ nominal torque		
At rest	2 W		
For wire sizing	26 VA (I max. 20 A @ 5 ms)		
Connection	Cable 1 m, 4 x 0.75 mm²		
Functional data	**Factory settings**	**Variable**	**Settings**
Torque (nominal torque)	Min. 16 Nm @ nominal voltage	25%, 50%, 75% reduced	.....
Control Control signal Y	DC 0 ... 10 V, input impedance 100 kΩ	Open-close, modulating (DC 0 ... 32 V)	.....
Operating range	DC 2 ... 10 V	Starting point DC 0.5 ... 30 V End point DC 2.5 ... 32 V	.....
Position feedback (Measuring voltage)	DC 2 ... 10 V, max. 0.5 mA	Starting point DC 0.5 ... 8 V End point DC 2.5 ... 10 V	.....
Position accuracy	±5%		
Direction of rotation	Reversible with switch 0 / 1		
Direction of motion at Y = 0 V	At switch position 0 ↖ resp. 1 ↗	Electronically reversible	.....
Manual override	Gearing latch disengaged with pushbutton, can be locked		
Angle of rotation	Max. 95°∢, can be limited at both ends with adjustable mechanical end stops		
Angle of rotation limiting	min. 30°∢		
Running time	7 s / 90°∢	7 ... 35 s	.....
Automatic adjustment of operating range and measuring signal U to match the mechanical angle of rotation	Manual triggering of the adaption by pressing the «Adaption» button or with the PC-Tool	Automatic adaptation resp. synchronisation whenever the supply voltage is switched on	.....
Override control	MAX (maximum position) = 100% MIN (minimum position) = 0% ZS (intermediate position, only AC) = 50%	MAX = (MIN + 30°∢) ... 100% MIN = 0% ... (MAX – 30°∢) ZS = MIN ... MAX	.....
Sound power level	63 dB (A)	With a 7 s = 63 dB (A) running time of 35 s = 53 dB (A)	
Position indication	Mechanical, pluggable		
Negative torque ⚠	≤50% from nominal torque (Caution: can only be used with restrictions. Please contact your Belimo representative.)		
Safety			
Protection class	**III** Safety extra-low voltage UL Class 2 Supply		
Degree of protection	IP54 in any mounting position NEMA 2, UL Enclosure Type 2		
EMC	CE according to 2004/108/EC		
Certification	Certified to IEC/EN 60730-1 and IEC/EN 60730-2-14 cULus according to UL 60730-1A and UL 60730-2-14 and CAN/CSA E60730-1:02		
Mode of operation	Type 1		

Technical data *(Continued)*

Safety	
Rated impulse voltage	0.8 kV
Control pollution degree	3
Ambient temperature	–30 ... +40°C (no restrictions) ⚠ +40 ... +50°C (Caution: can only be used with restrictions. Please contact your Belimo representative.)
Non-operating temperature	–40 ... +80°C
Ambient humidity	95% r.H., non-condensating
Maintenance	Maintenance-free
Dimensions / Weight	
Dimensions	See «Dimensions» on page 6
Weight	Approx. 970 g

Safety notes

⚠

- **The actuator is not allowed to be used outside the specified field of application, especially in aircraft or in any other airborne means of transport.**
- **It may only be installed by suitably trained personnel. Any legal regulations or regulations issued by authorities must be observed during assembly.**
- **The device may only be opened at the manufacturer's site. It does not contain any parts that can be replaced or repaired by the user.**
- **The cable must not be removed from the device.**
- **Adaptation is necessary when the system is commissioned and after each adjustment of the angle (press the adaptation push-button)**
- **When calculating the required torque, the specifications supplied by the damper manufacturers (cross section, design, installation site), and the air flow conditions must be observed.**
- **The device contains electrical and electronic components and is not allowed to be disposed of as household refuse. All locally valid regulations and requirements must be observed.**

Product features

Mode of operation
The actuator is controlled with a standard modulating signal of DC 0 ... 10 V and moves to the position defined by the control signal. The measuring voltage U serves for the electrical display of the damper position 0 ... 100% and as slave control signal for other actuators.

Parameterisable actuators
The factory settings cover the most common applications. Input and output signals and other parameters can be altered with the BELIMO Service Tool, MFT-P.

Simple direct mounting
Simple direct mounting on the damper spindle with a universal spindle clamp, supplied with an anti-rotation strap to prevent the actuator from rotating.

Manual override
Manual override with push-button possible (the gear is disengaged for as long as the button is pressed or remains locked).

Adjustable angle of rotation
Adjustable angle of rotation with mechanical end stops.
A minimum permissible angle of rotation of 30°∢ must be allowed for.

High functional reliability
The actuator is overload-proof, requires no limit switches and automatically stops when the end stop is reached.

Home position
The first time the supply voltage is switched on, i.e. during initial startup, the actuator carries out an adaptation. After pressing the «gear disengagement» pushbutton, the actuator moves to the home position at the end stop.

Pos. Direction of rotation		Home position	
0 / 1	Y = 0 ↺	ccw ↺	Left stop
	Y = 0 ↻	↻ cw	Right stop

The actuator then moves into the position defined by the control signal.

Adaption and synchronisation
During adaptation, the upper and lower spindle end stop is recorded and deposited in the actuator. Detection of the mechanical end stops enables a gentle approach to the end positions and thus protects the actuator mechanism.
During synchronisation, the actuator moves to the home position for angle referencing. This ensures correct position regulation.

Accessories

	Description	Data sheet
Electrical accessories	Auxiliary switch S..A..	T2 - S..A..
	Feedback potentiometer P..A..	T2 - P..A..
	Adapter Z-SPA Ordering of this adapter is compulsory if an auxiliary switch or a feedback potentiometer is required and the clamp is simultaneously mounted on the rear of the actuator (e.g. with short-spindle mounting).	
	PC-Tool MFT-P from version 3.3	T2 - MFT-P
	Positioner SG..24	T2 - SG..24
	Range controller SBG24	T2 - SBG24
	Room temperature controller CR24-..	S4 - CR24-..
	Digital position indication ZAD24	T2 - ZAD24
Mechanical accessories	Various accessories (clamps, shaft extensions etc.)	T2 - Z-GM..A..

Electrical installation

Wiring diagram

Note
- Connect via safety isolation transformer.
- Parallel connection of other actuators possible. Note performance data for supply.

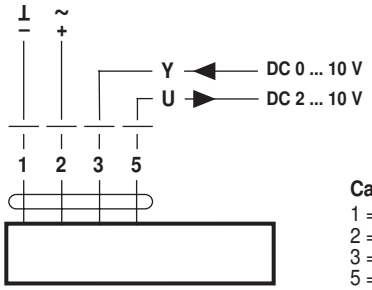

Cable colours:
1 = black
2 = red
3 = white
5 = orange

Cable lengths

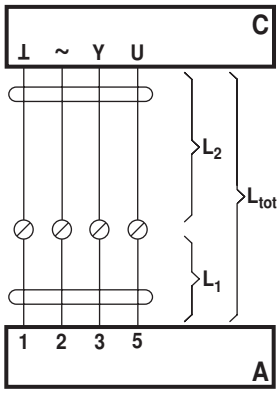

A = Actuator
C = Control unit
L_1 = Belimo connecting cable, 1 m (4 x 0.75 mm²)
L_2 = Customer cable
L_{tot} = Maximum cable length

Cross section L_2 ⊥ / ~	Max. cable length $L_{tot} = L_1 + L_2$		Example for DC
	AC	DC	
0.75 mm²	≤30 m	≤5 m	1 m (L_1) + 4 m (L_2)
1.00 mm²	≤40 m	≤8 m	1 m (L_1) + 7 m (L_2)
1.50 mm²	≤70 m	≤12 m	1 m (L_1) + 11 m (L_2)
2.50 mm²	≤100 m	≤20 m	1 m (L_1) + 19 m (L_2)

Note
When several actuators are connected in parallel, the maximum cable length must be divided by the number of actuators.

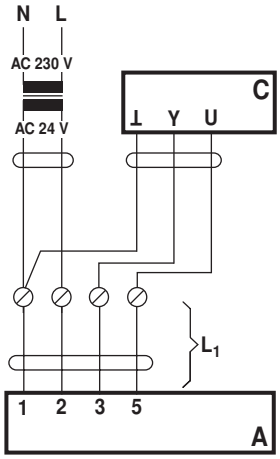

A = Actuator
C = Control unit
L_1 = Belimo connecting cable, 1 m (4 x 0.75 mm²)

Note
There are no special restrictions on installation if the supply and data cable are routed separately.

Functions with basic values

Override control with AC 24 V with relay contacts

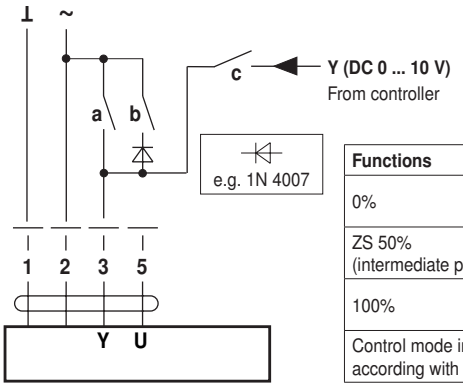

Functions	a	b	c
0%	⁄	⁄	⁄
ZS 50% (intermediate position)	⁄	⊥	⁄
100%	⊥	⁄	⁄
Control mode in according with Y	⁄	⁄	⊥

Override control with AC 24 V with rotary control switch

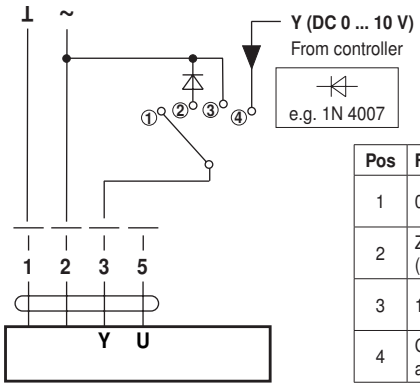

Pos	Functions
1	0%
2	ZS 50% (intermediate position)
3	100%
4	Control mode in according with Y

Remote control 0 ... 100%

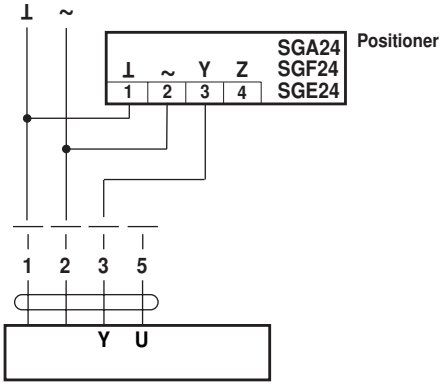

Minimum limit

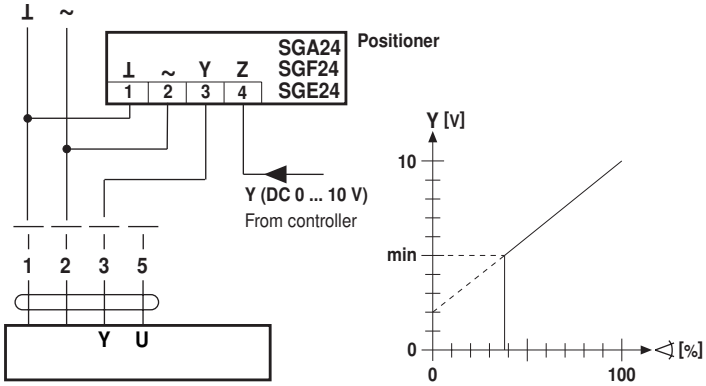

Master/Slave control (position-dependent)

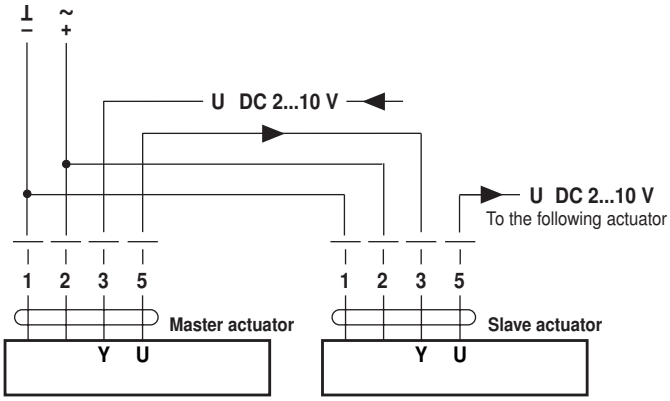

Control with 4 ... 20 mA via external resistance

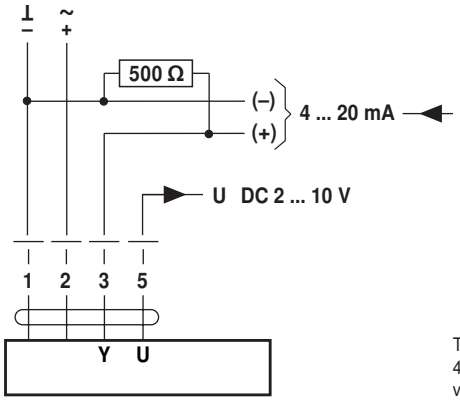

The 500 Ω resistor converts the 4 ... 20 mA current signal into a voltage signal DC 2 ... 10 V

Position indication

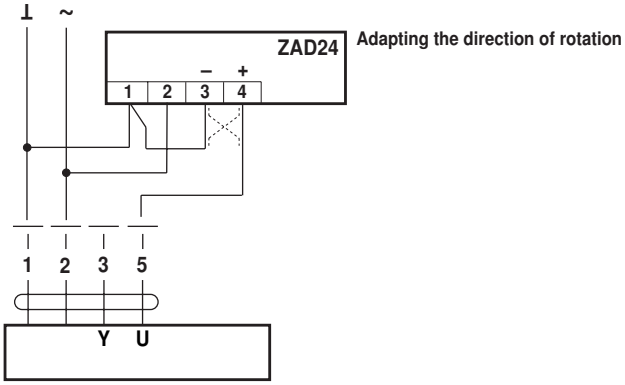

Functional check

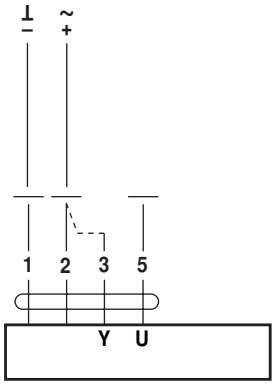

Procedure

- Apply 24 V to connection 1 and 2
- Disconnect connection 3:
  - For direction of rotation 0: Actuator turns in the direction of
  - For direction of rotation 1: Actuator turns in the direction of
- Short circuit connections 2 and 3:
  - Actuator runs in the opposite direction

Functions for actuators with specific parameters

Override control and limiting with AC 24 V with relay contacts

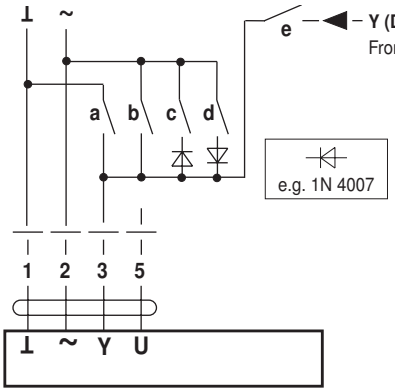

Functions	a	b	c	d	e
CLOSE [1]	⊥	⊥	⊥	⊥	⊥
MIN	⊥	⊥	⊥	⊥	⊥
ZS (intermediate position)	⊥	⊥	⊥	⊥	⊥
MAX	⊥	⊥	⊥	⊥	⊥
OPEN	⊥	⊥	⊥	⊥	⊥
Control mode in acc. with Y	⊥	⊥	⊥	⊥	⊥

Override control and limiting with AC 24 V with rotary control switch

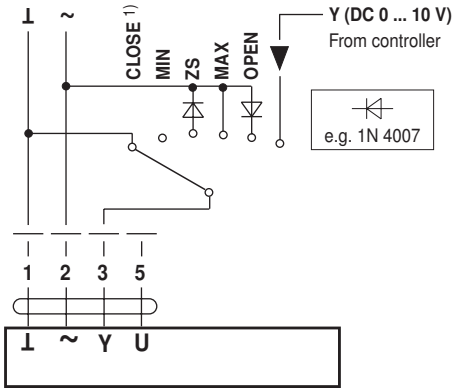

[1] **Caution!** This function is only guaranteed if the start point of the operating range is defined as min. 0.6 V.

Open-close control

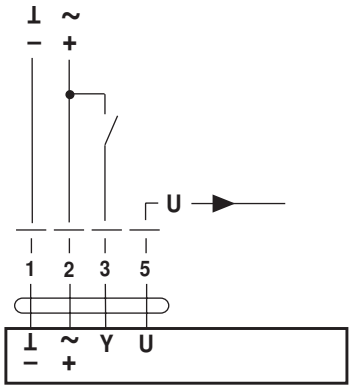

Operating controls and indicators

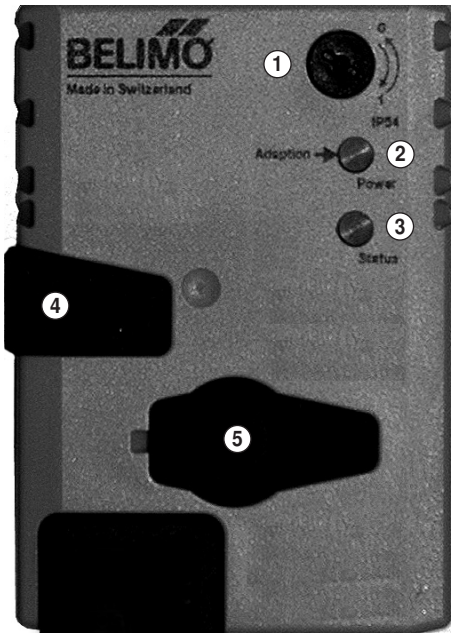

① **Direction of rotation switch**
Switching over: Direction of rotation changes

② **Push-button and green LED display**
Off: No voltage supply or fault
On: In operation
Press button: Switches on angle of rotation adaptation followed by standard operation

③ **Push-button and yellow LED display**
Off: Standard operation
On: Adaptation or synchronising process active
Press button: No function

④ **Gear disengagement switch**
Press button: Gear disengaged, motor stops, manual override possible
Release button: Gear engaged, synchronisation starts, followed by standard operation

⑤ **Service plug**
For connecting parameterising and service tools

Check voltage supply connection

a) ② Off and ③ On
b) ② Blinking and ③ Blinking

} Check the supply connections. Possibly ⏚ and ⏦ are swapped over.

Dimensions [mm]

Dimensional drawings

Damper spindle	Length	○	□	◇
	≥52	12 ... 26.7	≥12	≤25.5
*	≥20	12 ... 26.7	≥12	≤25.5

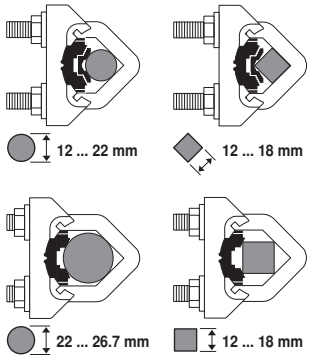

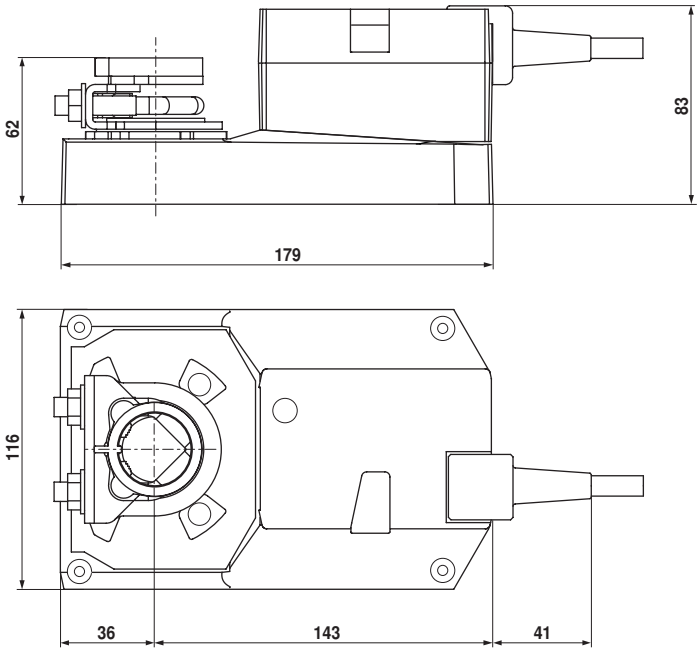

* When using an auxiliary switch or feedback potentiometer see «Accessories».