Robustline rotary actuator for 2 and 3 way ball valves
- **Torque 20 Nm**
- **Nominal voltage AC/DC 24 V**
- **Control: Open-close or 3-point**

Optimum protection against
- **Corrosion and chemical influences**
- **UV radiation**
- **Damp and condensation**

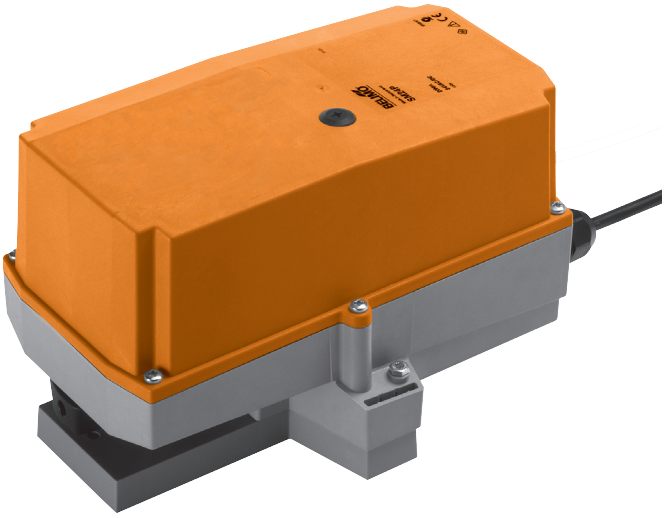

Technical data

Electrical data	Nominal voltage	AC 24 V, 50/60 Hz / DC 24 V
	Nominal voltage range	AC/DC 19.2 ... 28.8 V
	Power consumption Operation	2 W @ nominal torque
	At rest	0.2 W
	For wire sizing	4 VA
	Connection	Halogen-free cable 1 m, 3 x 0.75 mm^2
	Parallel operation	Possible, note the performance data
Functional data	Torque (nominal torque)	Min. 20 Nm @ nominal voltage
	Manual override	Gearing latch disengaged with pushbutton, can be locked
	Running time	90 s / 90°∢
	Sound power level	Max. 45 dB (A) (without ball valve)
	Position indication	Mechanical, pluggable
Safety	Protection class	**III** Safety extra-low voltage
	Degree of protection	IP66 + IP67
	EMC	CE according to 2004/108/EC
	Mode of operation	Type 1 (EN 60730-1)
	Rated impulse voltage	0.8 kV (EN 60730-1)
	Control pollution degree	4 (EN 60730-1)
	Ambient temperature	–30 ... +50°C
	Non-operating temperature	–40 ... +50°C
	Ambient humidity	100% r.H.
	Maintenance	Maintenance-free
Dimensions / Weight	Dimensions	See «Dimensions» on page 3
	Weight	Approx. 1.55 kg

Safety notes

- **The actuator has been designed for use in stationary heating, ventilation and air conditioning systems and is not allowed to be used outside the specified field of application, especially in aircraft or in any other airborne means of transport.**
- **It may only be installed by suitably trained personnel. Any legal regulations or regulations issued by authorities must be observed during installation.**
- **The switch for changing the direction of rotation may only be operated by authorised personnel. The direction of rotation must not be reversed in a frost protection circuit.**
- **The cover of the protective housing may be opened for adjustment and servicing. When it is closed afterwards, the housing must seal tight.**
- **The device on the inside may only be opened up in the factory. It does not contain any parts that can be replaced or repaired by the user.**
- **The cable must not be removed from the device.**
- **The device contains electrical and electronic components and is not allowed to be disposed of as household refuse. All locally valid regulations and requirements must be observed.**

Safety notes

(continued)

- **The information on chemical resistance refers to laboratory tests with raw materials and finished products and to trials in the field in the areas of application indicated.**
- **The materials used may be subjected to external influences (temperature, pressure, constructional fixture, effect of chemical substances etc.), that cannot be simulated in laboratory test or field trials.**
- **The information regarding areas of application and resistance can therefore only serve as a guideline. In case of doubt, we recommend that you definitely carry out a test. This information does not imply any legal entitlement. Belimo will not be held liable and will provide no warranty. The chemical or mechanical resistance of the materials used is not alone sufficient for judging the suitability of a product. Regulations pertaining to combustible liquids such as solvents etc. must be taken into account with special reference to explosion protection.**

Product features

Fields of application

The actuator is particularly suited for use in difficult conditions, e.g. in the field of:
– Wood drying
– Animal breeding
– Food processing
– Agricultural
– Swimming baths / Bathrooms
– Rooftop units
– General outdoor applications
– Changing climate

Resistances

Test	Test standard	Testing body
Noxious gas tests	EN 60068-2-60	Fraunhofer Institute ICT / DE
Salt fog spray test	EN 60068-2-52	Fraunhofer Institute ICT / DE
Ammoniac test	DIN 50916-2	Fraunhofer Institute ICT / DE
Climatic test	IEC 60068-2-30	Trikon Solutions AG / CH
Disinfectants (animals)		Trikon Solutions AG / CH
UV test (Solar radiation at ground level)	EN 60068-2-5 EN 60068-2-63	Quinel / Zug CH

Used materials

Actuator parts	Material
Actuator housing	Polypropylene (PP)
Cable glands / hollow shaft	Polyamide (PA)
Connection cable	FRNC
Clamp / screws in general	Steel 1.4404
Seals	EPDM
Form-fit insert	Anodised aluminium

Simple direct mounting

Straightforward direct mounting on the ball valve with only one screw. The assembly tool is integrated in the plug-on position indicator. The mounting position in relation to the fitting can be selected in 90°∢ steps.

Manual override

Manual override with pushbutton possible (the gear is disengaged for as long as the button is pressed or remains locked).

Adjustable angle of rotation

Adjustable angle of rotation with mechanical end stops. Standard setting 0 ... 90°∢.
The housing cover must be removed to set the angle of rotation.

High functional reliability

The actuator is overload-proof, requires no limit switches and automatically stops when the end stop is reached.

Accessories

Electrical accessories

Description	Data sheet
Auxiliary switch S..A..	T2 - S..A..
Feedback potentiometer P..A..	T2 - P..A..

Electrical installation

Wiring diagrams

Note
- Connect via safety isolation transformer.
- Other actuators can be connected in parallel. Note the performance data.
- Factory setting of the direction of rotation switch: Direction of rotation Y2

Open-close control

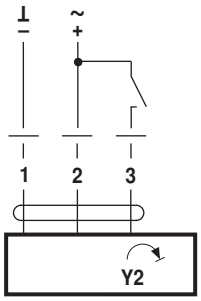

Rotary actuator	Rotary valve
Y2	A – AB = 0%

3-point control

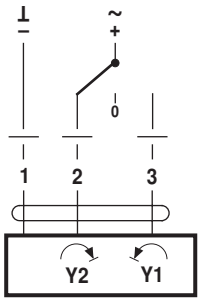

Cable colours:
1 = black
2 = red
3 = white

Direction of rotation

Dimensions [mm]

Dimensional drawings

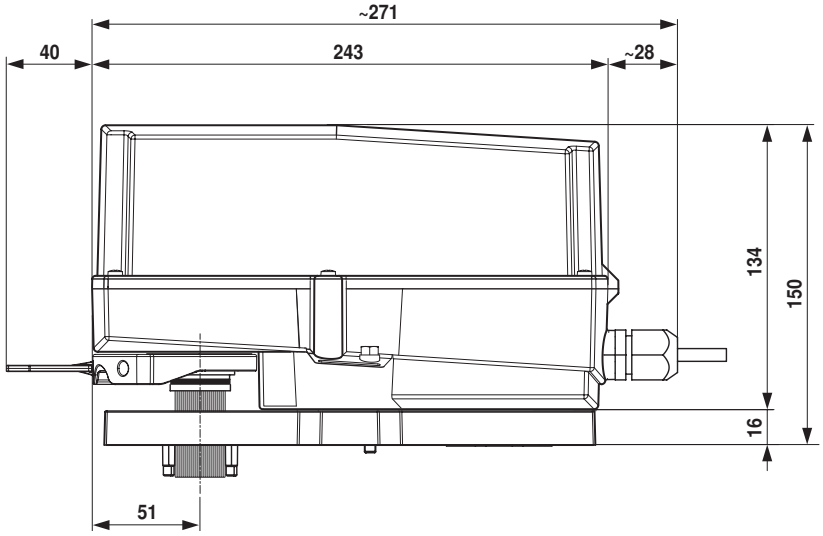

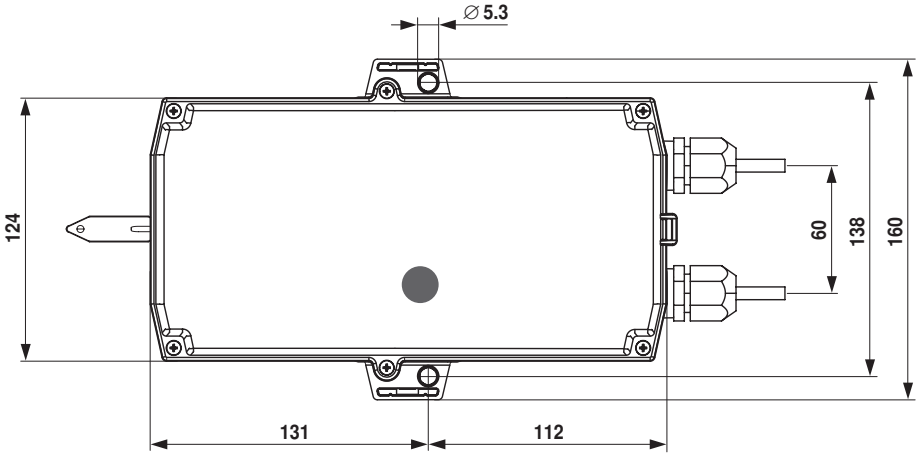

Further documentations
- Overview Valve-actuator combinations
- Data sheets for ball valves
- Installation instructions for actuators and ball valves
- Notes for project planning (hydraulic characteristic curves and circuits, installation regulations, commissioning, maintenance etc.)

70789-00001.B

1

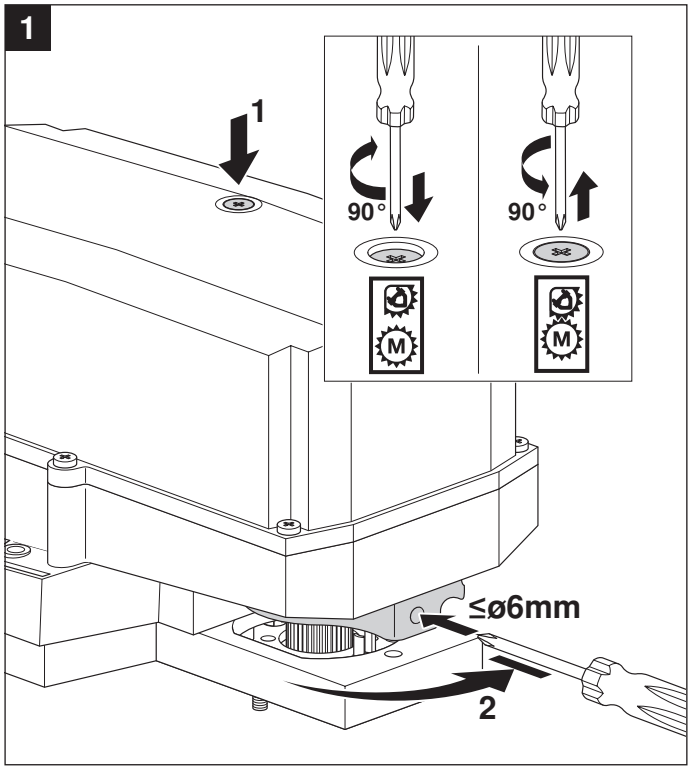

2

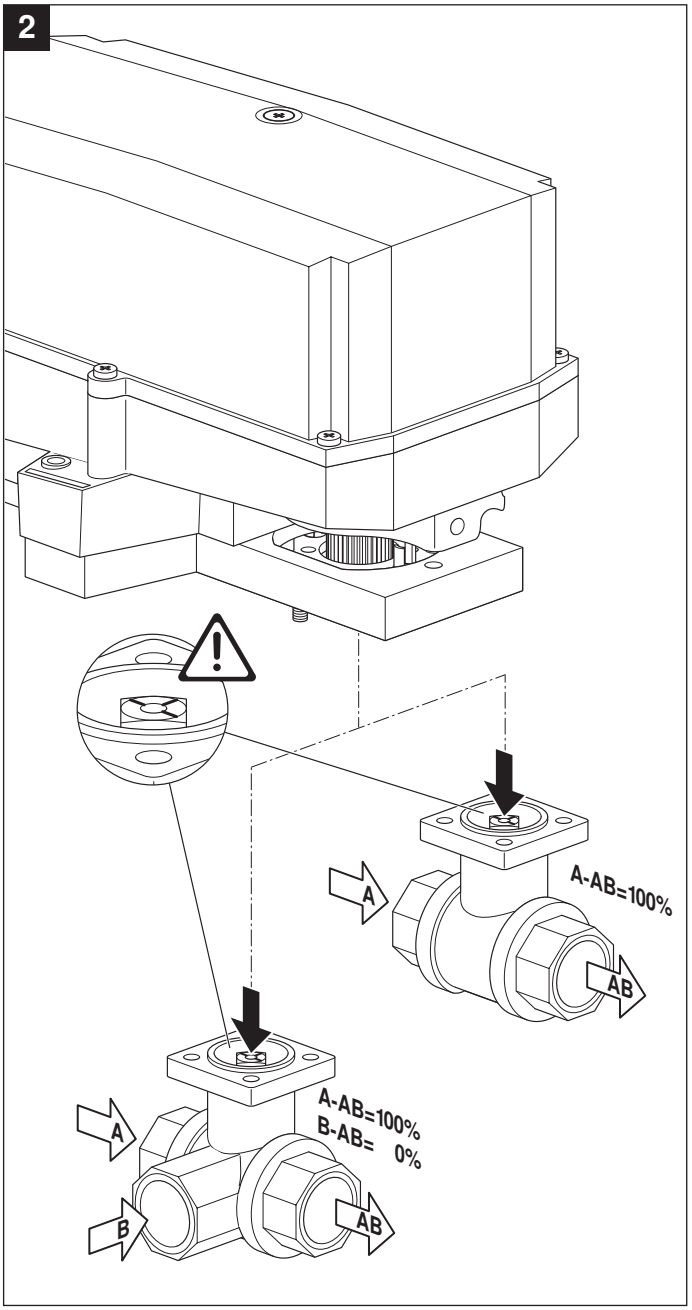

3

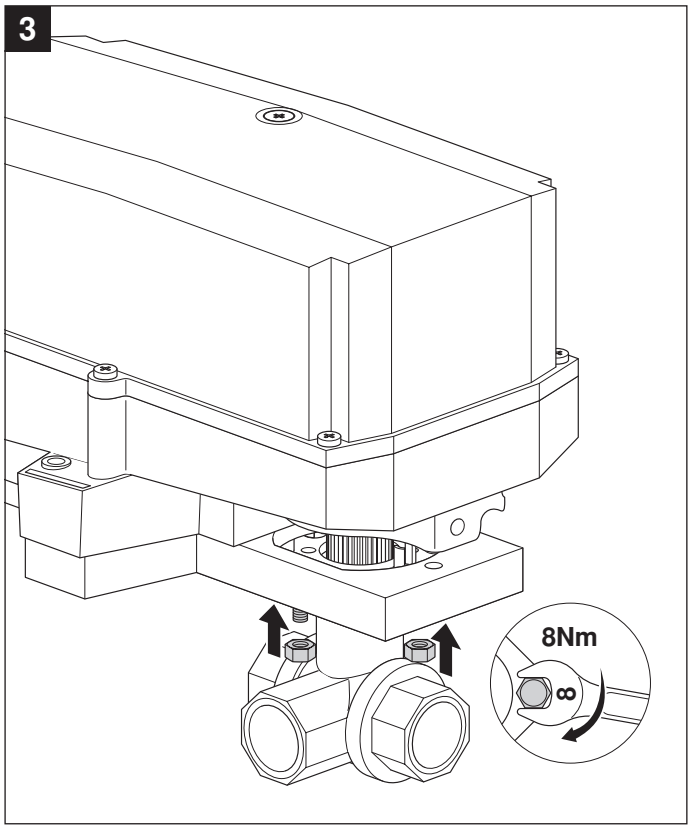

4

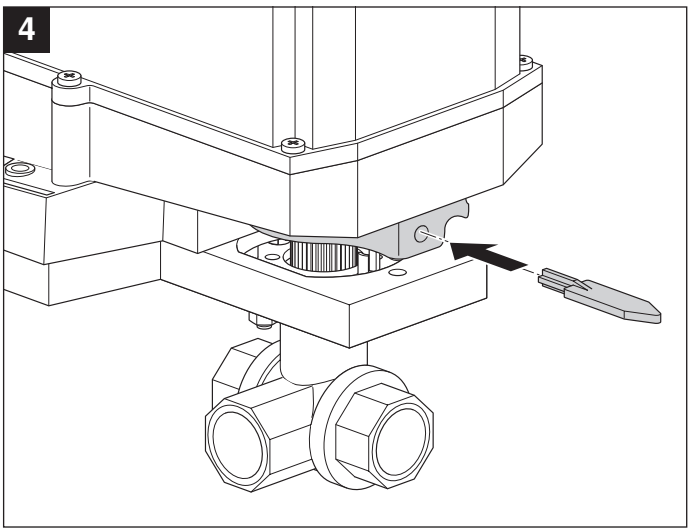

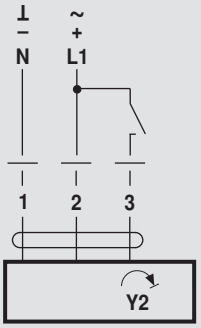

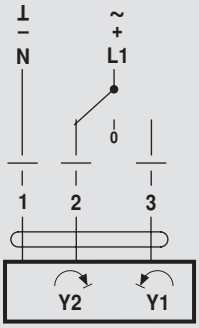

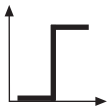

AC 24 V / DC 24 V

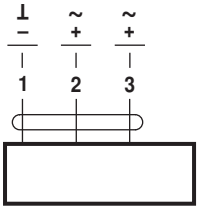

SR24P

AC 100 ... 240 V ⚠

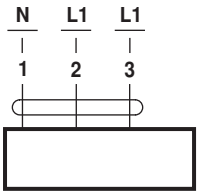

SR230P

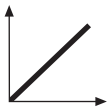

AC 24 V / DC 24 V

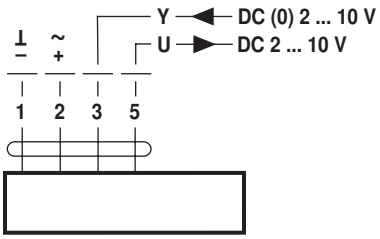

SR24P-SR

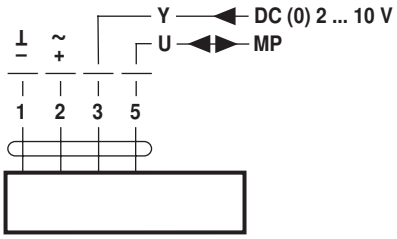

SR24P-MP