Rotary actuator with emergency function for 2- and 3-way ball valves

- **Torque 20 Nm**
- **Nominal voltage AC/DC 24 V**
- **Control: Open-close**
- **SRF24A: Deenergised NC**
  SRF24A-O: Deenergised NO

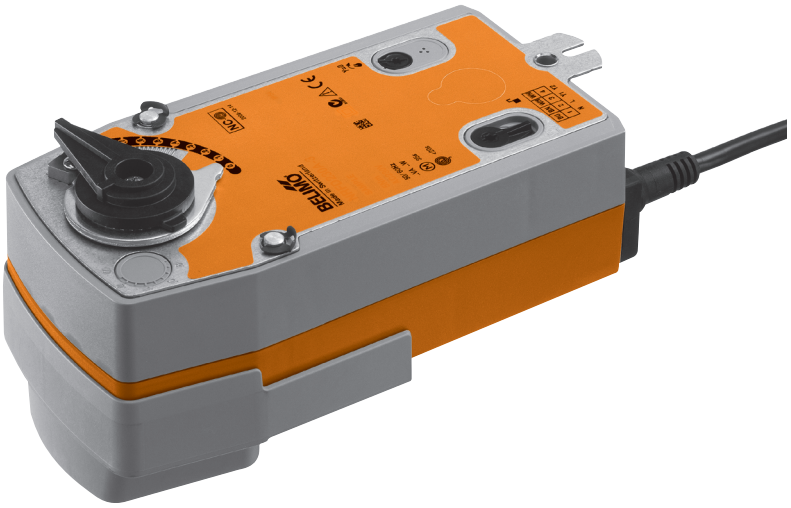

Technical data

Electrical data	Nominal voltage	AC 24 V, 50/60 Hz / DC 24 V
	Nominal voltage range	AC 19.2 ... 28.8 V / DC 21.6 ... 28.8 V
	Power consumption In operation At rest For wire sizing	5 W @ nominal torque 2.5 W 7.5 VA
	Connection	Cable 1 m, 2 x 0.75 mm²
	Parallel connection	Yes (Note performance data for supply!)
Functional data	Torque Motor Spring return	Min. 20 Nm @ nominal voltage Min. 20 Nm
	Direction of rotation Spring return – SRF24A – SRF24A-O	 Deenergised NC, ball valve closed (A – AB = 0%) Deenergised NO, ball valve open (A – AB = 100%)
	Manual override	With hand crank and interlocking switch
	Angle of rotation	Max. 90°∢
	Running time Motor Spring return	≤75 s / 90°∢ ≤20 s @ –20 ... 50°C / max. 60 s @ –30°C
	Sound power level Motor Spring return	≤45 dB (A) ≤62 dB (A)
	Position indication	Mechanical
Safety	Protection class	**III** Extra low voltage / UL Class 2 Supply
	Degree of protection	IP54 NEMA 2, UL Enclosure Type 2
	EMC	CE according to 2004/108/EC
	Certification	cULus according to UL 60730-1A and UL 60730-2-14 and CAN/CSA E60730-1:02 Certified to IEC/EN 60730-1 and IEC/EN 60730-2-14
	Mode of operation	Type 1.AA
	Rated impulse voltage	0.8 kV
	Control pollution degree	3
	Ambient temperature	–30 ... +50°C
	Non-operating temperature	–40 ... +80°C
	Ambient humidity	95% r.h., non-condensating
	Maintenance	Maintenance-free
Dimensions / Weight	Dimensions	See «Dimensions» on page 3
	Weight	Approx. 2 kg (without ball valve)

Safety notes

- **The actuator has been designed for use in stationary heating, ventilation and air conditioning systems and is not allowed to be used outside the specified field of application, especially in aircraft or in any other airborne means of transport.**
- **It may only be installed by suitably trained personnel. All applicable legal or institutional installation regulations must be complied with.**
- **The device may only be opened at the manufacturer's site. It does not contain any parts that can be replaced or repaired by the user.**
- **The cable must not be removed from the device.**
- **The device contains electrical and electronic components and is not allowed to be disposed of as household refuse. All locally valid regulations and requirements must be observed.**

Product features

Mode of operation
The actuator moves the ball valve to the operating position at the same time as tensioning the return spring. The ball valve is turned back to the safety position by spring force if the supply voltage is interrupted.

Simple direct mounting
Straightforward direct mounting on the ball valve with only one screw. The mounting position in relation to the ball valve can be selected in 90°∢ steps.

Manual override
Manual operation of the valve with the hand crank, locking in any position with the interlocking switch. Unlocking is manual or automatic by applying the operating voltage.

Adjustable angle of rotation
Adjustable angle of rotation with mechanical end stop.

High operational reliability
The actuator is overload-proof, requires no limit switches and automatically stops when the end stop is reached.

Combination valve actuators
Refer to the valve documentation for suitable valves, their permitted media temperatures and closing pressures.

Electrical installation

Wiring diagram

Notes
- Connect via safety isolation transformer.
- Parallel connection of other actuators possible. Note the performance data.

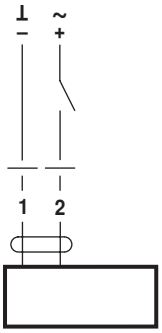

Cable colours:
1 = black
2 = red

Dimensions [mm]

Dimensional drawings

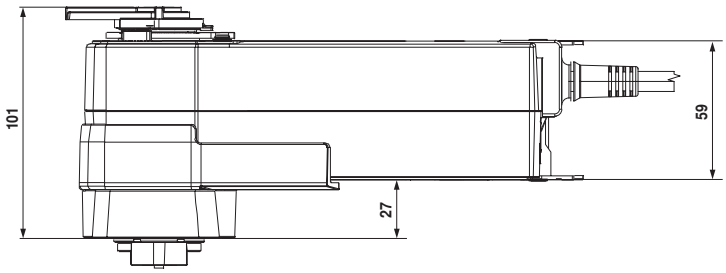

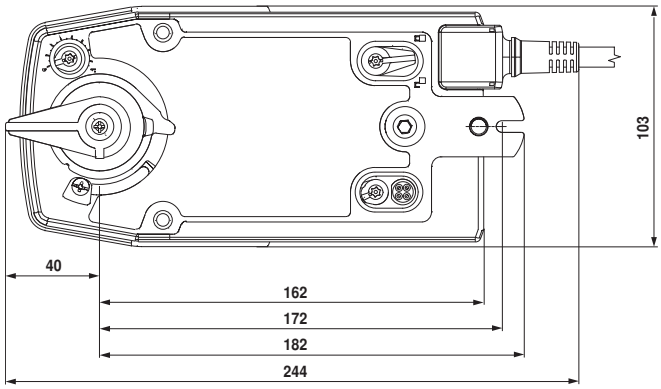

Further documentations

- Complete overview «The comlete range of water solutions»
- Data sheets for ball valves
- Installation instructions for actuators and/or ball valves
- Notes for project planning (hydraulic characteristic curves and circuits, installation regulations, commissioning, maintenance etc.)

71073-00001.E

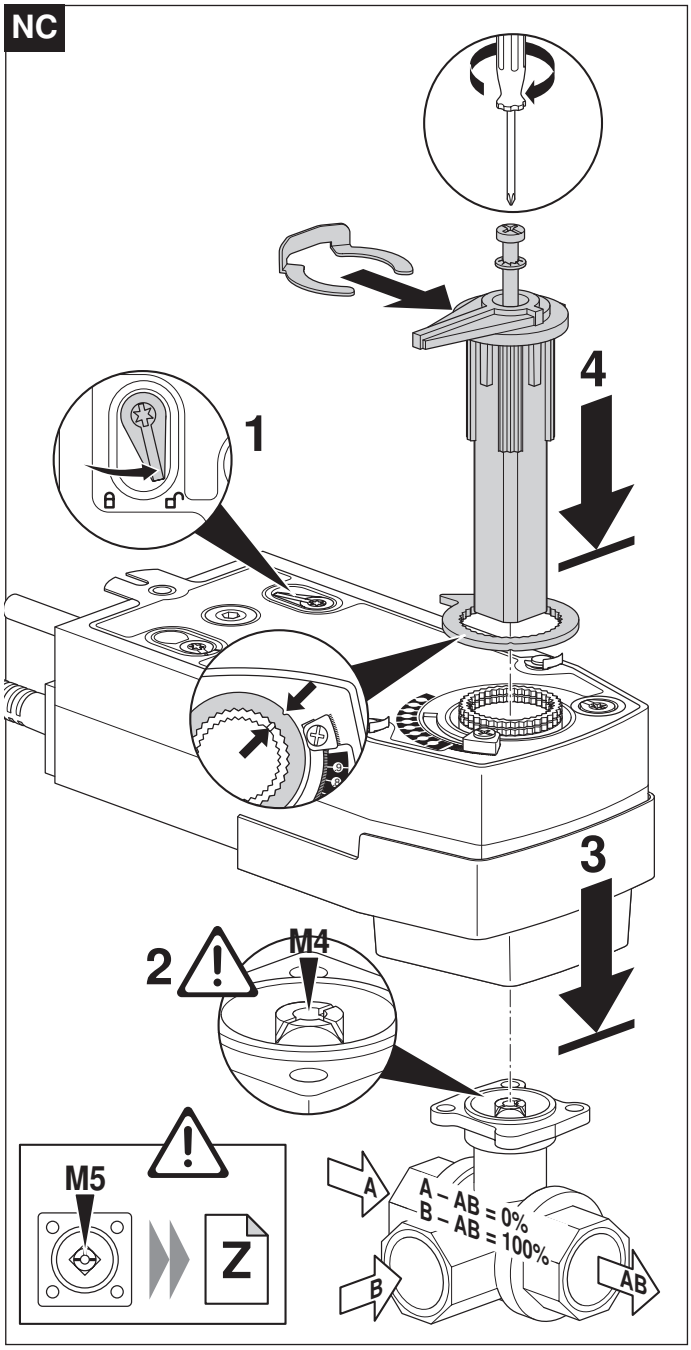

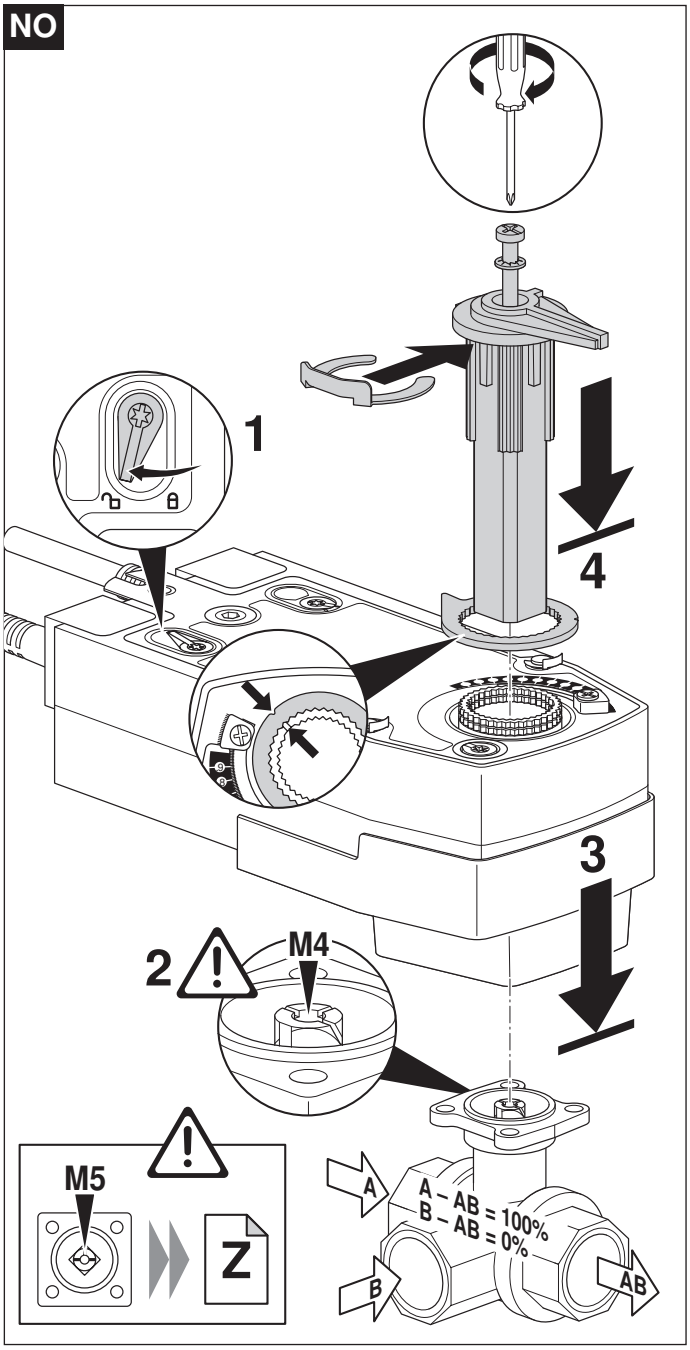

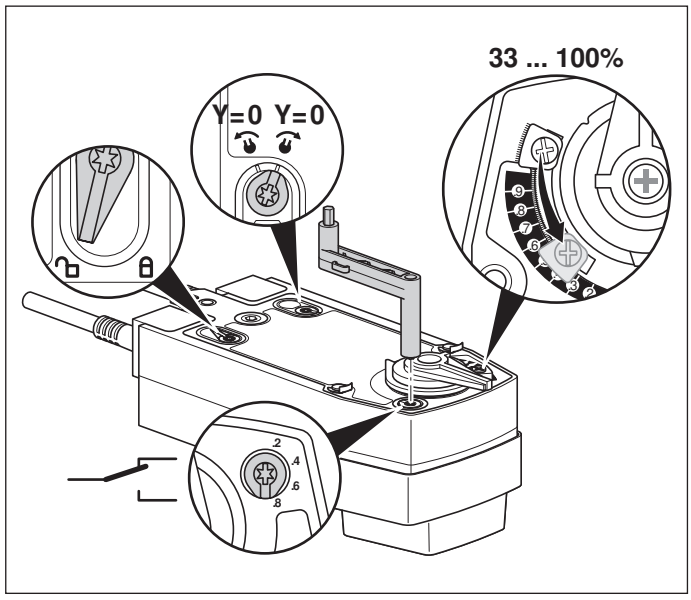

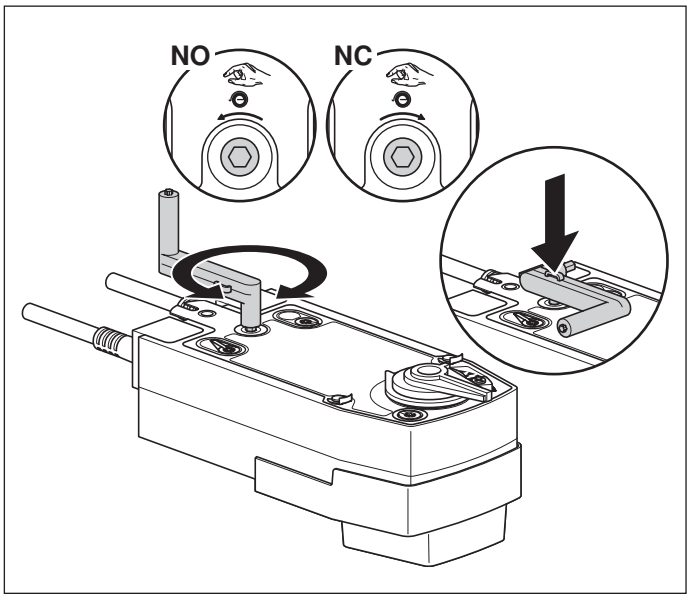

AC 24 V / DC 24 V

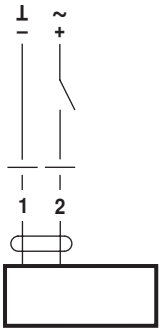

NRF24A(-O)
SRF24A(-O)

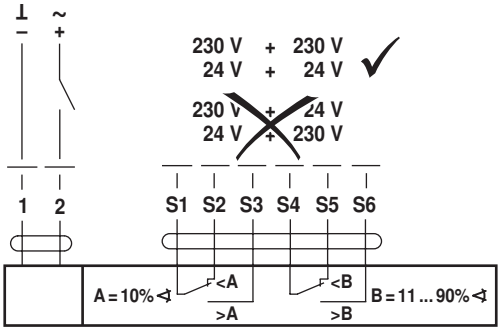

NRF24A-S2(-O)
SRF24A-S2(-O)

AC 230 V ⚠

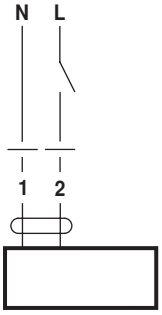

NRF230A(-O)
SRF230A(-O)

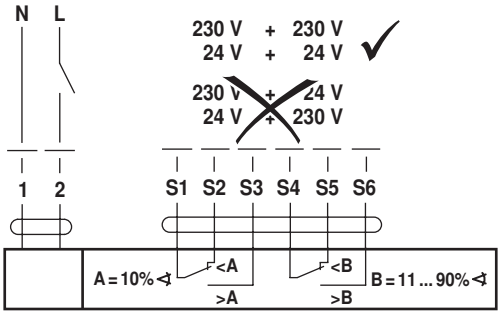

NRF230A-S2(-O)
SRF230A-S2(-O)

AC 24 ... 240 V / DC 24 ... 125 V ⚠

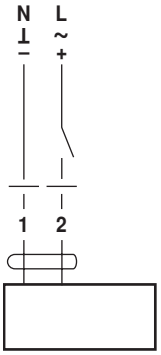

NRFA(-O)
SRFA(-O)

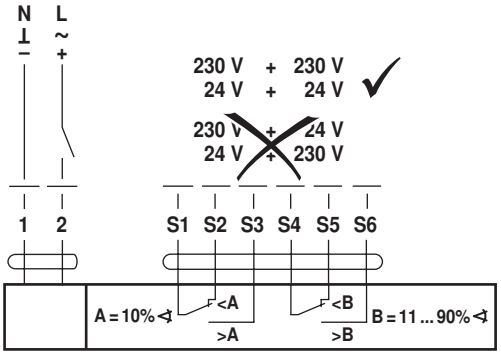

NRFA-S2(-O)
SRFA-S2(-O)

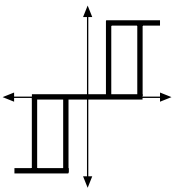

AC 230 V ⚠

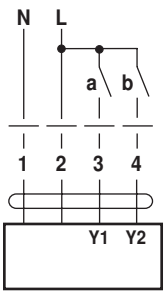

NRF(D)230A-3(-O)
SRF230A-3(-O)

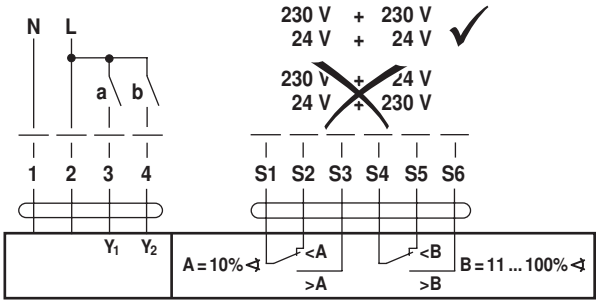

NRF(D)230A-3-S2(-O)
SRF230A-3-S2(-O)

		NO	NC	
a (Y1)	b (Y2)			
				A – AB = 100%
		stop	stop	
				A – AB = 0%
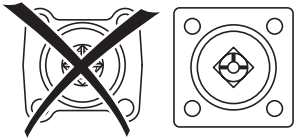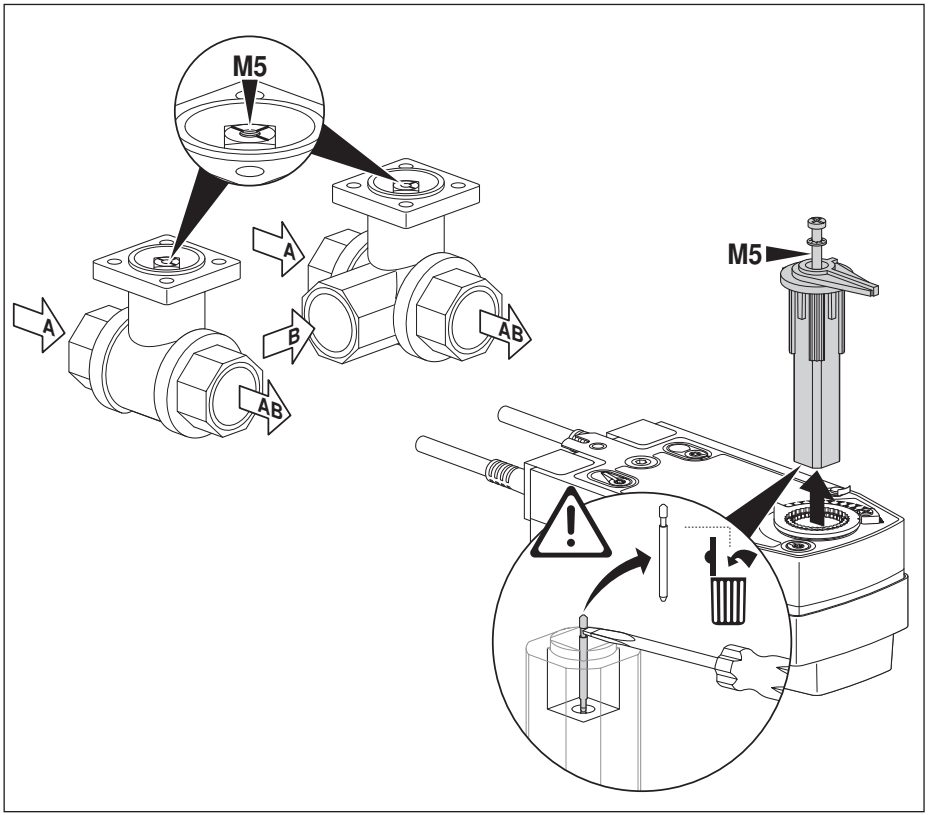
71364-00003.A