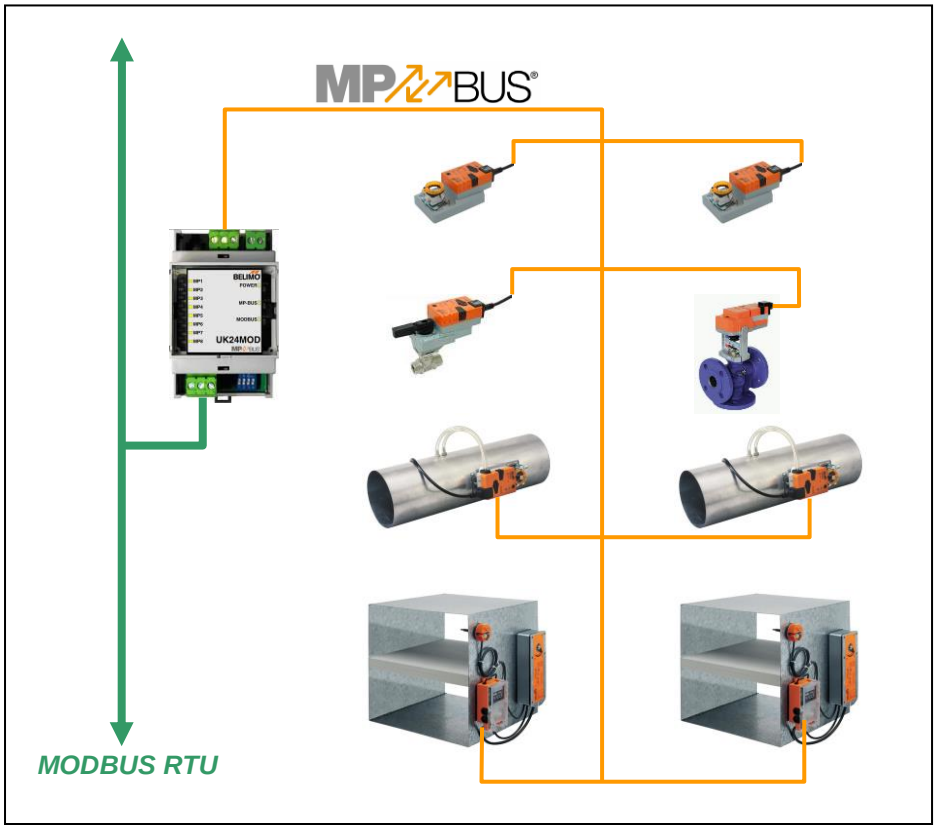

Belimo Gateway
MP to Modbus RTU - UK24MOD

Contents

Complete overview 2
Technical data 3
Safety notes 4
Product features 4
Installation and commissioning 4
Electrical installation 5
Dimensions 7
Operation elements 8
Operation, behaviour 8
Modbus register overview 11
Modbus register description 13
Diagnostics and testing tool 16
Connecting the PC-Tool for parameterisation of the MP/MFT(2) actuators 16
Version overview 17

Complete overview

Gateway MP / Modbus RTU

Suitable MP/MPL/MFT(2) Actuators

Damper actuators

Fire damper actuators

VAV actuators

Actuators for characterised control valve, butterfly valves and globe valves

EPIV actuators

MPL Actuators

Gateway MP to Modbus RTU. MP-bus-capable Belimo actuators can be connected on the MP-Bus side.

- **Interface MP/Modbus RTU**
- **Connection of MP/MPL/MFT(2) actuators and BF-TopLine actuators to Modbus RTU**
- **Up to 8 actuators and sensors can be connected**

Technical data

Electrical data	Nominal voltage		AC 24V, 50/60 Hz / DC 24V
	Power supply range		AC / DC 21.6…26.4 V
	For wire sizing		3 VA
	Connection	Modbus RTU	Plug-screw terminal, 3-pin
		Supply	Plug-screw terminal, 2-pin
		MP-Bus	Plug-screw terminal, 3-pin (All terminals suitable for 2 x 1.5 mm2)
		Tool	RJ12
Functional data	Supported actuators		MP/MPL/MFT(2), BF-TopLine
	Quantity of actuators		max. 8 pcs.
	Communication with actuators		Belimo MP-Bus, Master-Slave, 1200 Bd
	Maximum signal conductor lengths MP		Dependent on the number of connected actuators, actuator type, type of supply and signal conductor cross-section For details see page 5
	Modbus protocol		Modbus RTU Supported functions: 3, 6 (For register assignment, see page 11)
	Modbus medium	Medium	RTU / RS-485
		Parity	NONE (1, 8, N, 2) or EVEN (1, 8, E, 1), adjustable via DIP switch
		Number of nodes	max. 32 (without repeater)
		Baud rates	9'600, 19'200, 38'400, 76'800 Bd, adjustable via DIP switch
		Response delay	2…100 ms, adjustable via register
		Termination	150 Ω, adjustable via DIP switch
		Polarisation	680 Ω, adjustable via DIP switch
Safety	Protection class		III Safety extra-low voltage
	EMC		CE pursuant to 2004/108/EC
	Ambient temperature		0…+40° C
Installation / Dimension / Weight	Mounting		Control cabinet installation, can be snapped onto top hat rail 35 mm
	Dimensions		see page 7
	Weight		ca. 100 g

Safety notes

- **The device is not allowed to be used outside the specified field of application.**
- **It may be installed only by suitably trained personnel.**
- **The device does not contain any parts that can be replaced or repaired by the user and may only be opened at the manufacturer's site.**

Product features

Mode of operation

The UK24MOD allows the actuators to be controlled digitally via the MP-Bus and send back their current operating status. The control system information and the response is administered in registers in the UK24MOD and can be processed with Modbus commands. This permits the actuator functions to be integrated directly into the Modbus.

Sensor linking

One sensor can be connected per MP/MFT(2) actuator. This can be a passive resistance sensor (PT1000, NI1000 or NTC), an active sensor (output DC 0…10 V), or a switching contact. This provides a straightforward way of digitising the analogue signal of the sensors with the Belimo actuator and transferring it via UK24MOD to the Modbus.

MPL actuators don't provide a sensor input.

Installation and commissioning

Installation and wiring

The device is mounted on 35 mm top hat rails. The wiring is accomplished with plug-screw terminals.

Commissioning and parameterisation

Commissioning requires no configuration tools.

The Modbus parameterisation of the device is accomplished with DIP switches (address, baud rate, parity, bus terminator, polarisation). The option exists of setting the response delay via register entry (2..100 ms).

The addressing of the MP actuators is accomplished either with the keys under the front cover or with the Belimo PC-Tool MFT-P.

The MP-Bus assignment is determined automatically and continuously updated. No backup of the network structure takes place.

Electrical installation

Wiring diagram

AC/DC 24 V supply

Connection via safety isolation transformer!

Dimensioning of the supply

Also take into account the dimensioning specifications of the connected MP/MPL/MFT(2) actuators!

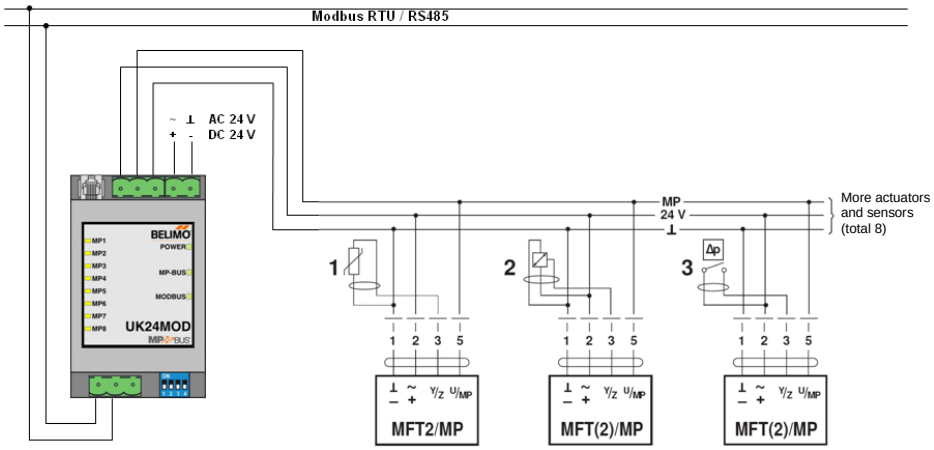

The wiring of Modbus RTU / RS485 is to be carried out in accordance with applicable directives (www.modbus.org). The device possesses resistors which can be switched on for bus connection and biasing.

Note: The GND of the RS485 line is galvanically isolated from the MP-Bus GND.

Connection of the MP-Bus

- The network consists of a 3-pin connection (MP communication and 24 V supply).
- Possibility of connecting a maximum of 8 MP/MPL/MFT(2) actuators per network.
- Neither a special cable nor terminating resistors are required.
- The signal conductor lengths (for calculation, see below) are limited:
  – by the sum of the signal conductor data of the connected MP/MPL/MFT(2) actuators,
  – by the type of supply (AC 24 V via the bus or DC 24 V via the bus),
  – by the signal conductor cross-section.

With AC 24 V supply: Maximum signal conductor length

L = max. cable length [m]

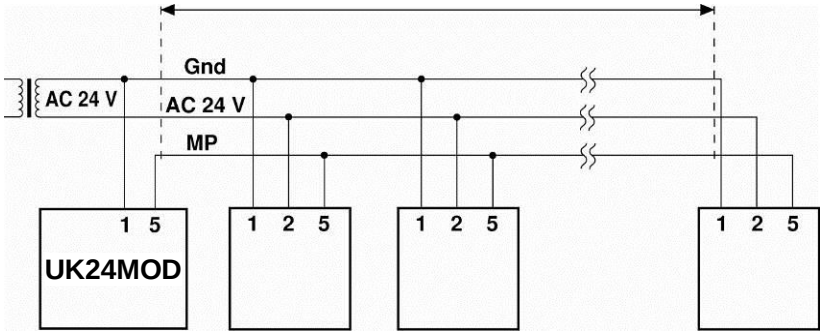

With AC 24 V supply: Total dimensioning MP/MPL/MFT(2) actuators [VA]

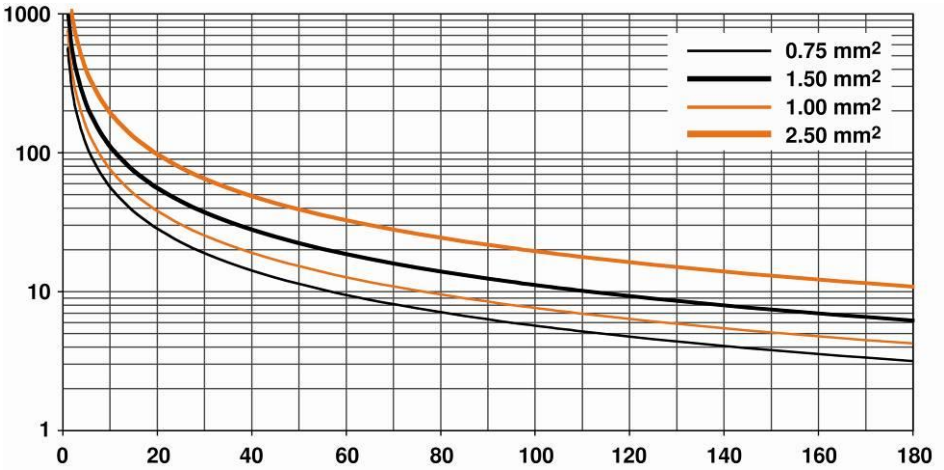

Power rating [VA]

Electrical installation *(continued)*

With AC 24 V supply: Calculation of the maximum signal conductor lengths

The power ratings [VA] of the MP/MPL/MFT(2) actuators used are to be added, and the corresponding signal conductor lengths are to be read from the diagram.

Example:
The following is connected to the MP-Bus: 1 pc. NM24A-MP, 1 pc. SM24A-MP, 1 pc. LMV-D2-MP… and 1 pc. NV24A-MP

Total power rating: 5.5 VA + 6 VA + 5 VA + 5 VA = 21.5 VA

To be read out from the mass of curves:	
For cables with wire-Ø [mm²]	Cable length [m]
0.75	29
1.00	35
1.50	50
2.50	90

With local supply AC 24 V (on site): Maximum signal conductor length

The signal conductor lengths can be significantly increased if the actuators are supplied with AC 24 V locally via a separate transformer. The signal conductor lengths indicated in the table apply regardless of the performance data of the actuators connected to the UK24MOD.

Wire-Ø [mm²]	L = max. cable length [m]
0.75	800
1.00	
1.50	
2.50	

With DC 24 V supply: Maximum signal conductor length

L = max. cable length [m]

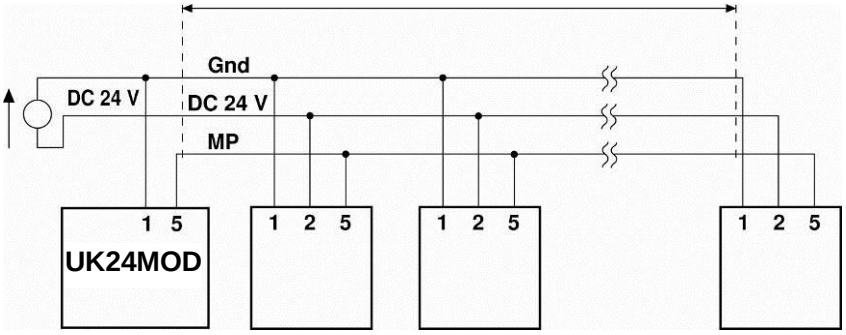

With DC 24 V supply: Total power consumption MP/MPL/MFT(2) actuators [W]

Cable length vs wire sizing power applies to DC supply (minimum supply voltage DC 24.0 V)

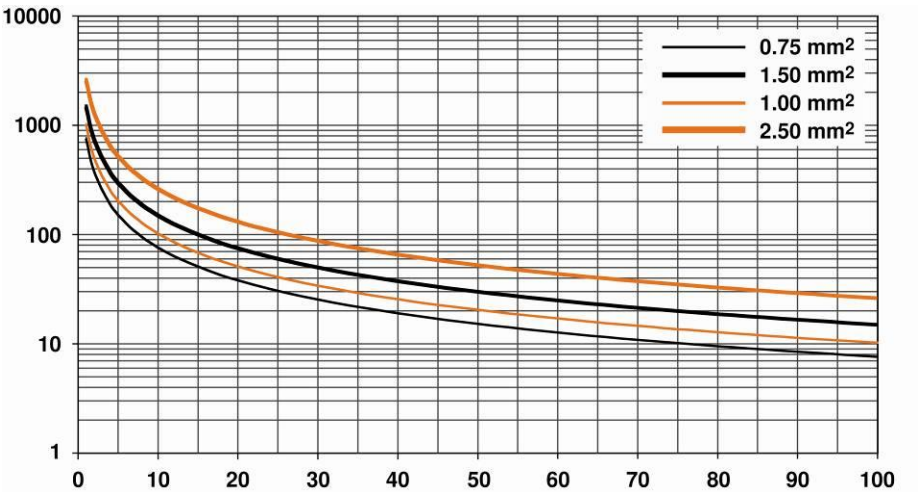

Note

Cable length vs wire sizing power applies to DC supply (minimum supply voltage DC 24 V)

Electrical installation *(continued)*

With DC 24 V supply: Calculation of the maximum signal conductor lengths

To be read out from the mass of curves:	
For cables with wire-Ø [mm²]	Cable length [m]
0.75	55
1.00	75
1.50	110
2.50	190

The power consumption [W] of the MP/MPL/MFT(2) actuators used is to be added, and the corresponding signal conductor lengths are to be read from the diagram.

Example:
The following is connected to the MP-Bus: 1 pc. NM24A-MP, 1 pc. SM24A-MP, 1 pc. LMV-D2-MP.. and 1 pc. NV24A-MP

Total power rating 3.5 W + 4 W + 3 W + 3 W = 13.5 W

Dimensions

Dimensional drawings [mm]

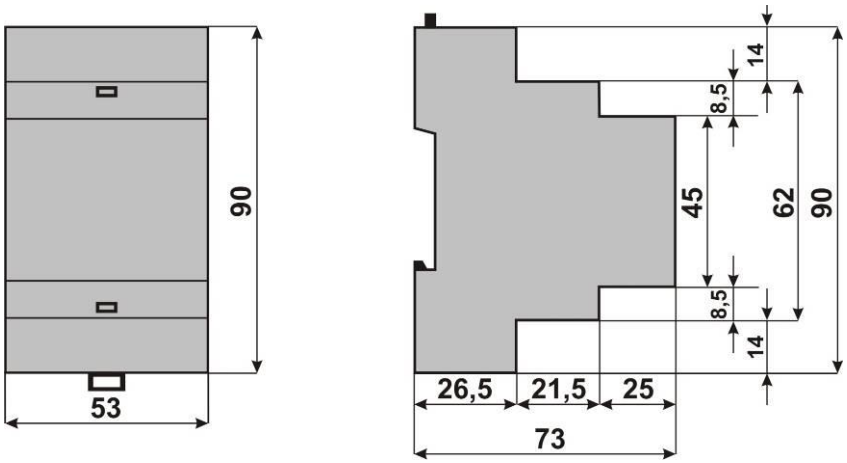

Operation elements

Legend

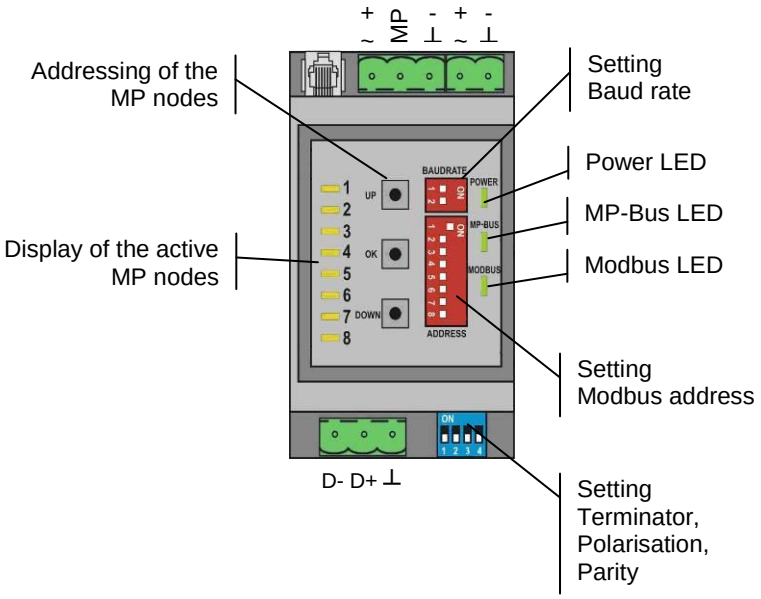

The illustration shows the operation elements of the device with the front cover open.

The MP-nodes are indicated according to their MP-address on LED1…8.
Illuminated: MP-node detected
Flashing: Communication with MP-node
Off: No MP-node detected

Operation, behaviour

Setting the Modbus address

The Modbus address is set in binary form with the 8 DIP switches under the front cover. The valid address range is 1-247. Values outside of this range will be interpreted as either 1 or 247, respectively.

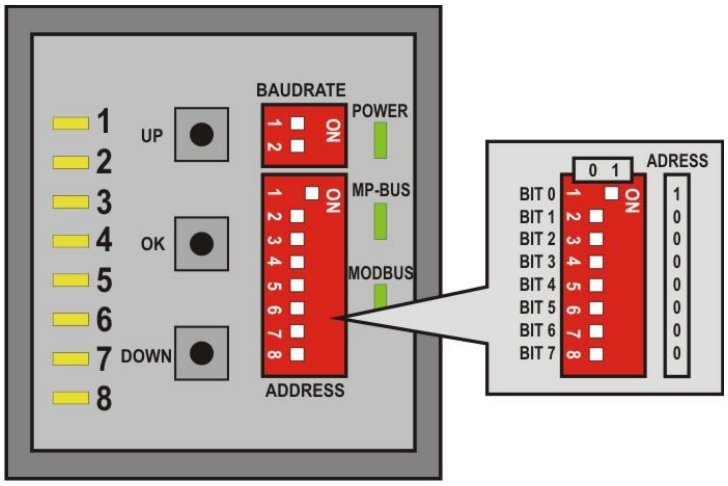

Operation, behaviour *(continued)*

Setting the Modbus baud rate

The Modbus baud rate is set using the DIP switches under the front cover to the values 9'600, 19'200, 38'400 and 76'800.

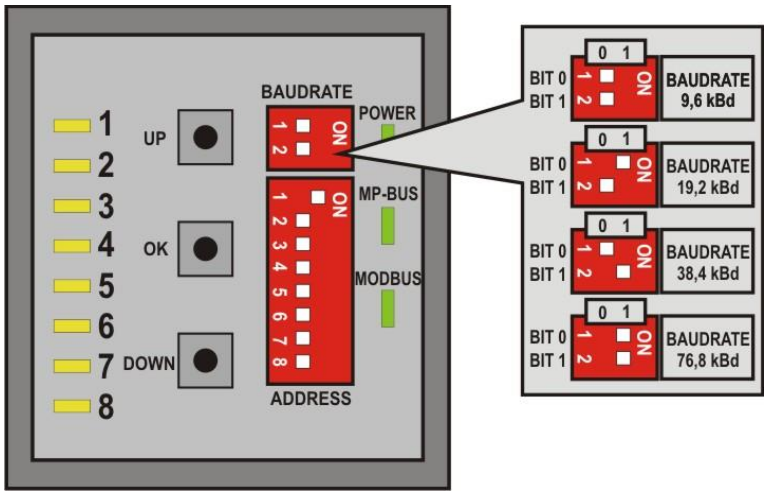

The response delay of the device is set to a fixed 4 ms with 9600 Bd. A delay of 2 ms is used as a default with higher baud rates. A longer delay can be set if needed via register 163.

The RS485 line must be completed at both bus ends with one resistor each. A suitable 150 Ω element is present in the Gateway which can be switched with DIP switch 1 on the base plate.

The RS485 line can be polarised with two resistors (DIP switches 2 and 3) in order to reduce interference effects during communications pauses. The biasing is implemented as a rule at one of the bus ends. Switches 2 and 3 must always be respectively activated or deactivated together.

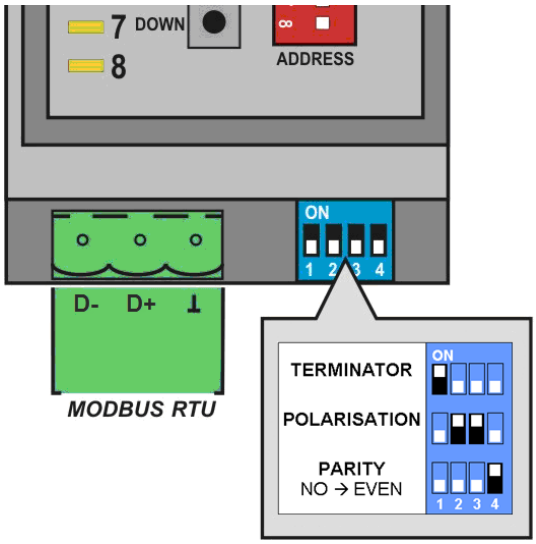

The character transmission uses either the settings NO parity (1 start bit, 8 data bits, no parity, 2 stop bits) or EVEN parity (1 start bit, 8 data bits, even parity, 1 stop bit), The setting is done with DIP switch 4.

Important:
The generally valid guidelines for RS485 / Modbus RTU are to be observed!

Operation, behaviour *(continued)*

Automatic scanning of the MP network

The MP-Bus assignment is determined automatically and continuously updated. No backup of the network structure takes place. The actuator information (e.g. series number, actuator type) is extracted as soon as one supported actuator is detected at the addresses MP1…MP8.
In the event of a communications interruption, the Gateway will discard the affected actuator after 10 seconds and reset the actuator register. Monitoring of the actuator is accomplished preferably with the Actuator type register (12).

Addressing MP actuators

The Gateway supports the assigning of addresses to the MP nodes by means of the keys UP, OK and DOWN, located behind the front cover.

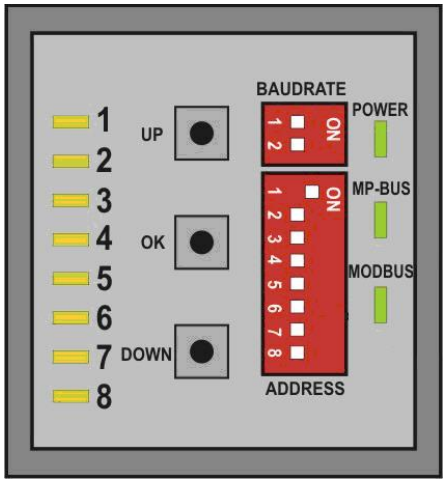

Procedure:

1. Press down the OK key and keep it down until LED1 is continuously illuminated.
2. Select an address (LED1…LED8) with the keys UP and DOWN
3. Start addressing sequence with OK key
4. Acknowledge addressing of the respective actuator within 4 minutes;
   (depending on the type, using the address key, direction of rotation switch, ...)
5. Successful acknowledgement is made visible by the rapid flashing of the corresponding LEDx. Afterwards, the Gateway will switch to standard operation.

The addressing process can be interrupted at any time by pressing the OK key.
The de-addressing of a node is not supported.

Modbus register overview

The information of the connected actuators is digitised per node in 20 registers each (à 16 bit). The resulting register ranges for the MP nodes 1-8 are:

Note

Some Modbus master number the registers starting with 0 (not 1).

In these cases the registers are shifted by 1 (e. g. MP1 → 0-19).

MP Address	Offset MP[n]	Range
MP1	0	Registers 1 - 20
MP2	20	Registers 21 - 40
MP3	40	Registers 41 - 60
MP4	60	Registers 61 - 80
MP5	80	Registers 81 - 100
MP6	100	Registers 101 - 120
MP7	120	Registers 121 - 140
MP8	140	Registers 141 - 160

Actuator register

Register			Air Water	VAV EPIV	Fire	MPL
Number	High Byte	Low Byte				
MP[n] + 1	**Setpoint [%]**		✓	✓		✓
MP[n] + 2	**Override control**		✓	✓	✓	
MP[n] + 3	**Command**		✓	✓	✓	✓
MP[n] + 4	Actual position [%]		✓	✓	✓	✓
MP[n] + 5	Relative volumetric flow [%]			✓		
MP[n] + 6	Errors	Malfunctions	✓	✓	✓	(✓)
MP[n] + 7	**Sensor type**		✓	✓		
MP[n] + 8	Current sensor value		✓	✓		
MP[n] + 9	Series number 1st part		✓	✓	✓	✓
MP[n] + 10	Series number 2nd part		✓	✓	✓	✓
MP[n] + 11	Series number 4th part		✓	✓	✓	✓
MP[n] + 12	Actuator type		✓	✓	✓	✓
MP[n] + 13	Time monitoring [s]				✓	
MP[n] + 14	**Min [%]**		✓	✓		
MP[n] + 15	**Max [%]**		✓	✓		
MP[n] + 16	Absolute volumetric flow			✓		
MP[n] + 17	Nominal volumetric flow			✓		
MP[n] + 18	-					
MP[n] + 19	-					
MP[n] + 20	-					

Modbus functions

The Modbus functions Read Holding Registers [3] and Preset Single Register [6] are available for writing/reading access on the registers.

Registers with boldface script have writing access. Because of the fact that the registers are not continuously backed up, they should be updated periodically. The Gateway sends the values to the actuators at regular intervals.

The MP-Bus assignment is determined automatically and updated. The Actuator type register (12) should be evaluated for the monitoring of a node.

Modbus register overview *(continued)*

Service register

Note

Devices with V1.06 and older use registers register 161 – 164 for service information.

Register		
Number	**High Byte**	**Low Byte**
1001	Modbus baud rate	
1002	Modbus address	
1003	**Response delay [ms]**	
1004	Firmware Version	

The response delay (Register 1003) is backed up continuously.

Modbus register description

Register 1: Setpoint

Setpoint for actuator setting in hundredths of one percent,
i.e. 0…10,000 corresponds to 0…100%

In the case of actuators for fire dampers, the control must be accomplished through the Override control register (2). Writing access to the setpoint is refused (see Register 6).

Register 2: Override control

Overriding the setpoint with defined values

Override control	
0	None
1	Open
2	Closed
3	Min
4	Mid
5	Max
6	Fast_closed

Due to safety considerations, the only override values permitted in the case of actuators for fire dampers are Open (1) and Fast_closed (6). The operating position (Open) must also be repeated within 120 seconds (recommendation: 90 sec.).

If the override command is not renewed, then the Gateway will move the actuator into safety position and signal an error (see Register 6). The remaining time for the renewal is visible in Register 13.

Register 3: Command

Initiation of actuator functions for Service and Test; the selected command is transmitted to the actuator, after which the register will be reset once more.

Command	
0	None
1	Adaption
2	Test run
3	Synchronisation
4	Reset actuator malfunctions

MPL actuators (Actuator Type: 6) support only the command Adaption.

Register 4: Actual position

Actual position in hundredths of one percent,
i.e. 0…10,000 corresponds to 0…100%

Register 5: Relative volumetric flow

Relative volumetric flow in hundredths of one percent of Vnom / P'Nom,
i.e. 0…10,000 corresponds to 0…100%

This value is available only for VAV controllers and EPIV units (Actuator Type: 5).
For all other types, 65535 will be entered.

The unit depends on the node type:
% of V'Nom for VAV controllers and EPIV units
% of P'Nom for VAV controllers in STP mode

Modbus register description *(continued)*

Register 6: Errors / Malfunctions

The status information is subdivided into actuator messages (malfunctions/maintenance) and into errors detected by the Gateway. MPL actuators (Actuator Type: 6) don't generate Malfunctions/Maintenance information.

	Bit	Description
Malfunctions Maintenance (Low Byte)	0	Excessive utilisation
	1	Mechanical travel increased
	2	Mechanical overload
	3	-
	4	Safety-relevant faults (fire & smoke only)
	5	Damper test error (fire & smoke only)
	6	Duct temperature too high (fire & smoke only)
	7	Smoke detector tripped (fire & smoke only)
Faults (High Byte)	8	No response from MP node
	9	Checksum error MP node
	10	Error message MP node
	11	Value outside of range
	12	Function not available for actuator type
	13	Time exceeded (fire & smoke only)
	14	-
	15	-

The malfunction bits can be reset with Register 3 (command: 4) or with the Belimo PC-Tool. Malfunctions 0 and 4 cannot be reset.

The error bits will be reset automatically by the Gateway.

Register 7: Sensor type

Sensor type connected to the actuator; in the absence of sensor specification, the wiring at the Y input of the MP actuator will have the effect of a local override.

Note

Switching of the sensor type may necessitate a restart of the actuator in order to read out correct sensor values.

Sensor type	
0	None
1	Active sensor (mV)
2	Passive sensor 1k (Ω)
3	Passive sensor 1…20k (Ω)
4	Switching contact (0/1)

Note: The setting is not continuously backed up and should for that reason be updated periodically.

Register 8: Actual sensor value

Actual sensor value; dependent on the setting in Register 7

Register 9, 10, 11: Series number

Each MP node has an unambiguous series number which is either impressed on or glued to the node. The series number consists of 4 segments, although only parts 1, 2 and 4 are displayed in the Gateway.

Example: 00839-31324-064-008

Register 9	Register 10	Register 11
1st part	**2nd part**	**4th part**
00839	31234	008

Modbus register description *(continued)*

Register 12:
Actuator type

Actuator type; the allocation may deviate from the basic category with some actuators.

Actuator type	
0	Actuator not connected / not known
1	Air/water actuators with/without safety function
2	Valve actuator, linear
3	Valve actuator, rotary
4	Fire damper actuator
5	VAV controller / EPIV
6	MPL actuator

Note: In the event of a communications interruption, the Gateway will discard the affected actuator after 10 seconds and reset the actuator type to 0. Monitoring of the actuator is thus accomplished preferably with this register.

Register 13:
Time monitoring

Remaining time in seconds for the renewal of the override control (fire & smoke only). The counter will be set to 120 seconds with each writing access at Register 2.

Register 14:
Min / Vmin setting

Minimum limit (position or flow) in hundredths of one percent,
i.e. 0…10,000 corresponds to 0…100%

Attention: Changing the limit may result in malfunction of the device.

Register 15:
Max / Vmax setting

Maximum limit (position or flow) in hundredths of one percent,
i.e. 2000…10,000 corresponds to 20…100%

Attention: Changing the limit may result in malfunction of the device.

Register 16:
Absolute volumetric flow

Absolute volumetric flow (or pressure)

This value is available only for VAV controllers and EPIV units (Actuator Type: 5).
For all other types, 65535 will be entered.

The unit depends on the node type:
[m^3/h] for VAV controllers
[Pa] for VAV controllers in STP mode
[l/min] for EPIV units

Register 17:
Nominal volumetric flow

Nominal volumetric flow (or pressure)

This value is available only for VAV controllers and EPIV units (Actuator Type: 5).
For all other types, 65535 will be entered.

The unit depends on the node type:
[m^3/h] for VAV controllers
[Pa] for VAV controllers in STP mode
[l/min] for EPIV units

Service register 1001 (former 161):
Modbus baud rate

Modbus baud rate (=x*100) in accordance with the setting of the DIP switches,
i.e. 96 → 9600 Baud

Service register 1002 (former 162):
Modbus address

Modbus address (1..247) in accordance with the setting of the DIP switches

Service register 1003 (former 163):
Response delay

Response delay (2…100 ms); the default value is 2 ms; the response delay is set to a fixed 4 ms with a baud rate of 9600.

The response delay must be increased in the event that the Modbus Master is unable to switch quickly enough from transmission to reception mode.

Service register 1004 (former 164):
Firmware Version

Firmware Version of the device

Diagnostics and testing tool

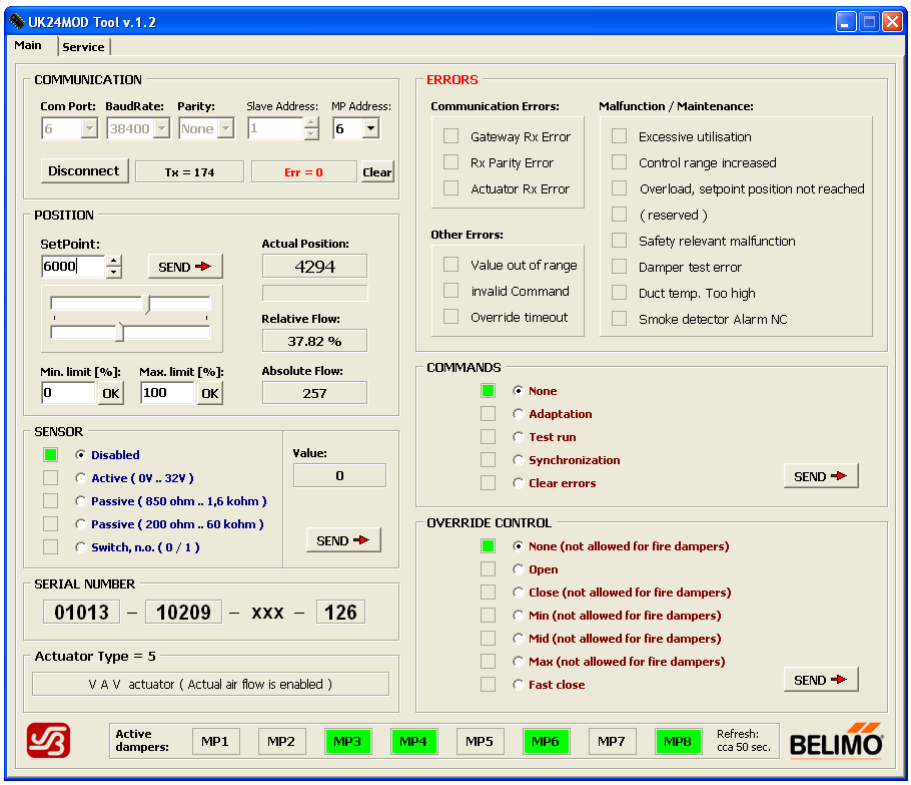

A PC-based tool is available for diagnostics and tests which can be utilised as a Modbus Master and which uses graphics elements to depict the actuator information.

The UK24MOD Tool can be obtained through the Internet:
www.belimo.eu | Products … | Download Center

Connecting the PC-Tool for parameterisation of the MP/MFT(2) actuators

The MP network can be scanned, actuators can be addressed and actuator-specific parameters (e.g. running time) can be readily adjusted with the Belimo PC-Tool.

The PC -Tool can be accessed directly on the MP-Bus via the RJ12 socket of the UK24MOD. The Gateway recognises the connected PC-Tool automatically and stops communications with the MP devices.

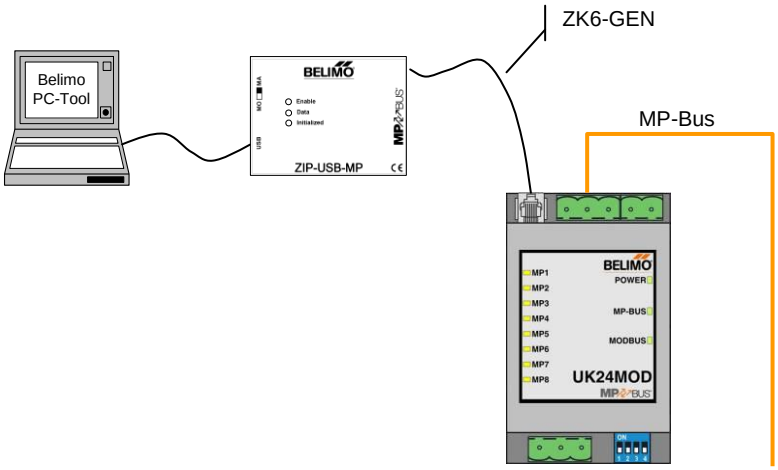

Version overview

Firmware V1.08

New functions/modifications:

- Bug fix: Modbus telegrams longer than 20 Bytes (e.g. ReadHoldingRegister with more than 8 registers) are properly handled
- Bug fix: Detection of new MP actuator in operation

Firmware V1.07

New functions:

- New register for reading of nominal volumetric flow
- Support for MPL actuators
- MP addressing function reworked

Note on compatibility:

Service information can be found in registers 1001 to 1004 (former 161 to 164)

Known issues:

- Modbus telegrams longer than 20 Bytes (e.g. ReadHoldingRegister with more than 8 registers) cause wrong register entries.

Firmware V1.06

New functions:

- Timeout period for fire & smoke increased from 60 to 120 seconds (Register 2). Higher numbers of nodes realizable per Modbus master.

Firmware V1.05

New functions:

- New registers for adjusting Min (14) and Max (15) setting.
- New register for reading of absolute volumetric flow.

Firmware V1.04

New functions:

- Parity/Character transmission adjustable via DIP switch: NONE (1, 8, N, 2) or EVEN (1, 8, E, 1)

Firmware V1.03

Release without restrictions

All-inclusive.

- 5-year warranty
- On site around the globe
- A complete range of products from one source
- Tested quality
- Short delivery times
- Comprehensive support

Headquarters

BELIMO Holding AG
Brunnenbachstrasse 1
CH-8340 Hinwil
Tel. +41 43 843 61 11
Fax +41 43 843 62 68
info@belimo.ch
www.belimo.com

Subsidiaries, Representatives and Agencies

Albania
Algeria
Argentina
Australia
Austria
Bahrain
Belarus
Belgium
Bosnia
Brazil
Bulgaria
Cameroon
Canada
Central America
Chile
China
Croatia
Cyprus
Czech Republic
Denmark
Egypt
Estonia
Finland
France
Georgia
Germany
Greece
Great Britain
Hong Kong
Hungary
Iceland
India
Indonesia
Ireland
Israel
Italy
Japan
Jordan
Kazakhstan
Korea
Kuwait
Latvia
Lebanon
Libya
Lithuania
Luxembourg
Macedonia
Malaysia
Malta
Mexico
Moldova
Montenegro
Morocco
Netherlands
New Zealand
Norway
Oman
Pakistan
Philippines
Poland
Portugal
Qatar
Romania
Russia
Saudi Arabia
Serbia
Singapore
Slovakia
Slovenia
South Africa
Spain
Sri Lanka
Sweden
Switzerland
Taiwan
Thailand
Tunisia
Turkey
United Arab Emirates
Ukraine
United States of America
Vietnam

Belimo worldwide: www.belimo.com

BELIMO®