BELIMO

Flow sensor

Technical data sheet 22PF-1U..

Ultrasonic flow sensor for closed cold and hot water systems containing water or water-glycol mixtures. It continuously measures the glycol content of the medium and compensates for it to ensure an accurate measurement.
The flow sensor is installed in the system via two external threads (ISO 228-1). The power supply is AC/DC 24 V and the output signal is 0...10 V or communicative via BACnet MSTP, Modbus RTU or MP-Bus. The flow rate can be accumulated.
Programming is carried out with the Belimo Assistant App via NFC technology.

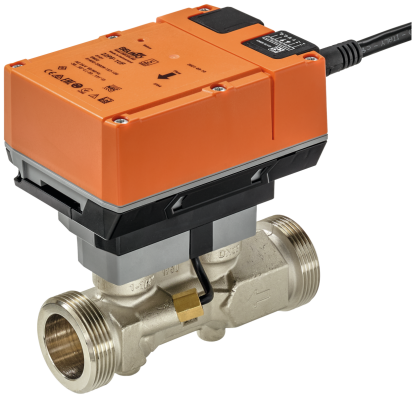

5 YEAR WARRANTY

BACnet Modbus MP-BUS NFC

Type Overview

Type	DN	G ["]	FS [l/s]	FS [m³/h]	kvs theor. [m³/h]	PN
22PF-1UC	15	3/4	0.5	1.8	3.9	25
22PF-1UD	20	1	0.83	3.0	7.2	25
22PF-1UE	25	1 1/4	1.17	4.2	13.2	25
22PF-1UF	32	1 1/2	2.0	7.2	16.0	25
22PF-1UG	40	2	3.33	12	23.6	25
22PF-1UH	50	2 1/2	5.0	18	32.0	25

FS: Full scale, maximum flow

kvs theor.: Theoretical kvs value for pressure drop calculation

Technical data

Electrical data	Nominal voltage	AC/DC 24 V
	Nominal voltage frequency	50/60 Hz
	Nominal voltage range	AC 19.2...28.8 V / DC 21.6...28.8 V
	Power consumption AC	2.2 VA
	Power consumption DC	1.1 W
	Connection supply	Cable , 6 x 0.75 mm²
Data bus communication	Communication	BACnet MS/TP Modbus RTU MP-Bus
	Number of nodes	BACnet / Modbus see interface description MP-Bus max. 8 (16)
Functional data	Application	Water Water-glycol mixture
	Parametrisation	via NFC, Belimo Assistant App
	Voltage output	1 x 0...10 V, 0.5...10 V, 2...10 V or user defined
	Output signal active note	DC 0...10 V (factory setting), selectable via NFC max. load 1 mA User defined: - Lower limit: 0...8 V - Upper limit: 2...10 V
	Pipe connection	External thread according to ISO 228-1
	Installation position	upright to horizontal
	Servicing	maintenance-free

Measuring data	Measured values	Flow Temperature
	Measuring fluid	Water and water-glycol mixtures
	Measuring principle	Ultrasonic volumetric flow measurement
	Measuring accuracy flow	±2% (of 20...100% FS) @ 20°C / glycol 0% vol.
	Measuring accuracy flow note	Additional information on measuring accuracy (with diagram) can be found in the section "Measuring accuracy".
	Min. flow measurement	0.2% of FS
Materials	Fluid wetted parts	Brass nickel-plated, Brass, Stainless steel, Aramid fibre, PEEK, EPDM
	Flow measuring pipe	Brass body nickel-plated
Safety data	Protection class IEC/EN	III, Protective Extra-Low Voltage (PELV)
	Degree of protection IEC/EN	IP54
	Degree of protection NEMA/UL	NEMA 2
	EMC	CE according to 2014/30/EU
	Certification IEC/EN	IEC/EN 60730-1:11 and IEC/EN 60730-2-15:10
	Quality Standard	ISO 9001
	Type of action	Type 1
	Rated impulse voltage supply	0.8 kV
	Pollution degree	3
	Ambient humidity	Max. 95% RH, non-condensing
	Ambient temperature	-30...55°C [-22...130°F]
	Fluid temperature	-20...120°C [-5...250°F] At a fluid temperature of < 2°C [< 36°F], frost protection must be guaranteed

Safety notes

This device has been designed for use in stationary heating, ventilation and air-conditioning systems and must not be used outside the specified field of application, especially in aircraft or in any other airborne means of transport.

Outdoor applications: Only possible where (sea) water, snow, ice, sunlight or aggressive gases cannot interfere directly with the device and it can be guaranteed that the ambient conditions remain at all times within the thresholds according to the data sheet.

Only authorised specialists may carry out installation. All applicable legal or institutional installation regulations must be complied during installation.

The device contains electrical and electronic components and must not be disposed of as household refuse. All locally valid regulations and requirements must be observed.

Product Features

Mode of operation

The ultrasonic flow sensor is equipped with a flow pipe, two flow transmitters and an electronic circuit. A temperature sensor is mounted in the flow pipe to compensate the temperature effects.

A sensor error occurs when the ultrasonic path is interrupted (air bubbles in the system, connection to ultrasonic transducers interrupted).

Detailed error reports are available via Belimo Assistant App or BACnet, Modbus and MP-Bus.

Collective error report display

If the output signal is set to 0.5...10 V or 2...10 V and also to flow, a collective error report is displayed with a voltage of 0.3 V. This indicates a measurement error of the temperature sensor or flow sensor.

Functions

Wires 6 and 7 are for the Modbus or BACnet communication. The physical bus address can be defined via the app.

Wire 5 can be parametrised with the app as an output signal 0...10 V (factory setting), 0.5...10 V, 2...10 V, user defined or as an MP-Bus communication. For the output signal, the flow or the fluid temperature can be selected.

The output signal can be scaled to achieve a better resolution. Factory setting is 10 V = FS (see diagram, example of output voltage characteristic curve 22PF-1UC).

Example output voltage characteristic 22PF-1UC

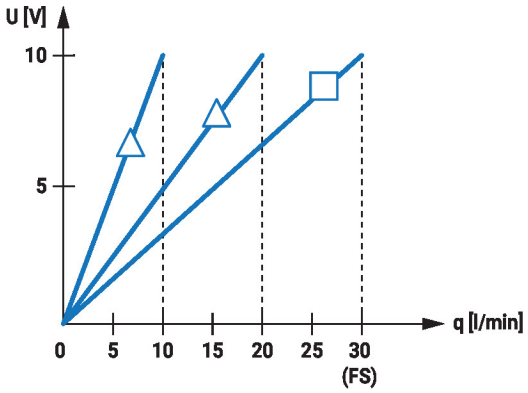

U = Output voltage
q = Measured flow
Δ = Alternative settings
□ = Factory setting

Patented glycol compensation

Glycol changes the viscosity of the heat transfer fluid and as a result affects the measured volumetric flow. Without glycol compensation, volumetric flow measurements can show errors of as much as 30 percent. The patented automatic glycol compensation significantly reduces the degree of measurement error.

Selection of the fluid used:

– Water
– Propylene glycol
– Ethylene glycol
– Antifrogen L
– Antifrogen N
– DowCal 200
– DowCal 100

Pressure drop

The pressure drop across the flow sensor to achieve a desired volumetric flow q can be calculated using the theoretical kvs value (see type overview) and the formula below.

Formula pressure drop

$$\Delta p = \left(\frac{q}{k_{vs}theor.}\right)^2 * 100\ kPa$$

Δp: kPa
q: m^3/h
k_{vs}theor.: m^3/h

Example pressure drop calculation

22PF-1UE (DN25)

k_{vs}theor. = 13.2 m^3/h
q = 1.7 m^3/h

$$\Delta p = \left(\frac{q}{k_{vs}theor.}\right)^2 * 100\ kPa = \left(\frac{1.7\ m^3/h}{13.2\ m^3/h}\right)^2 * 100\ kPa = 1.66\ kPa$$

Pressure drop diagram

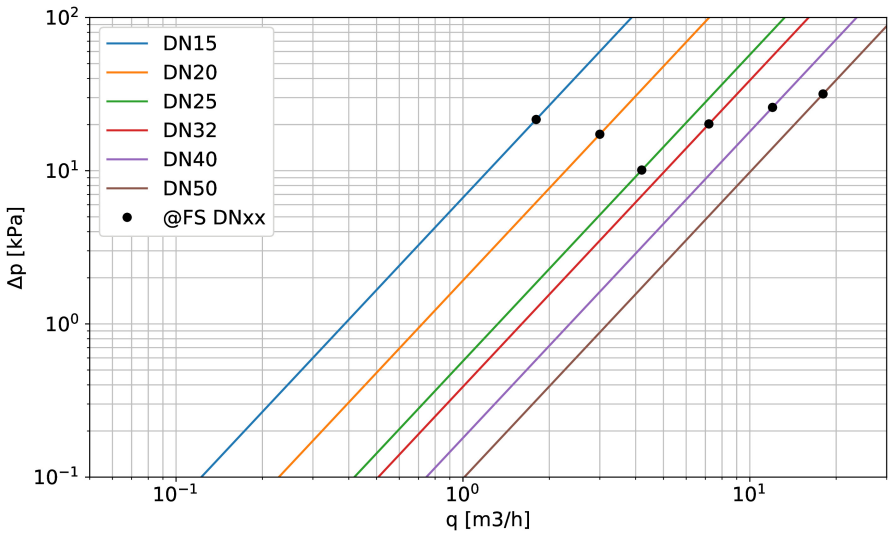

Δp = Pressure drop
q = Measured flow

Measuring accuracy

Measuring accuracy for water (glycol 0% vol.):

±2% (@ 20...100% FS)

At a temperature range of 15...120 °C.

Measuring accuracy for water + glycol (glycol 0...60% vol.)

±5% (@ 20...100% FS)

±0.01 FS, but not more than 30% of q (@ 0.8...20% FS)

At a temperature range of -20...120°C.

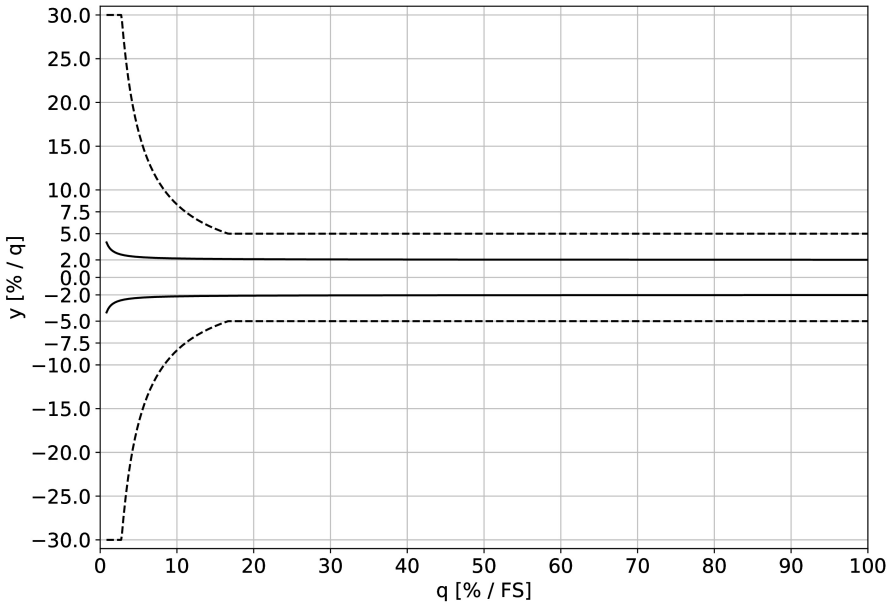

— Water
---- Water + glycol (≤60% glycol)
y = Measuring accuracy
q = Measured flow
FS = Full scale, maximum flow

Installation notes

Recommended installation positions

The sensor can be installed upright to horizontal. The sensor may not be installed in a hanging position.

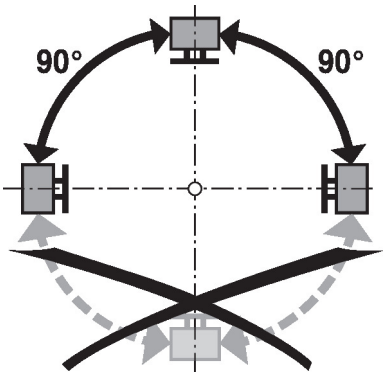

Installation in return

Installation in the return is recommended.

Inlet section

In order to achieve the specified measuring accuracy, a flow-calming section or inflow section in the direction of the flow is to be provided upstream from the flow sensor. Its dimensions should be at least 5x DN.

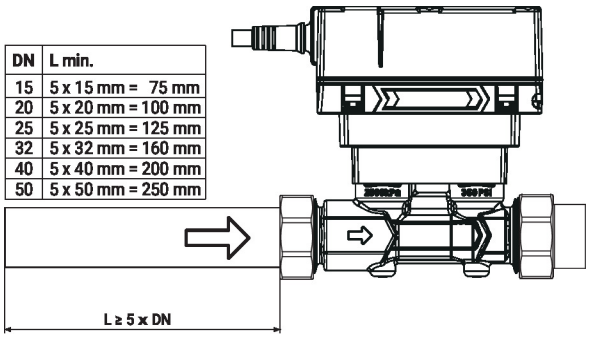

DN	L min.
15	5 x 15 mm = 75 mm
20	5 x 20 mm = 100 mm
25	5 x 25 mm = 125 mm
32	5 x 32 mm = 160 mm
40	5 x 40 mm = 200 mm
50	5 x 50 mm = 250 mm

Water quality requirements

The water quality requirements specified in VDI 2035 must be adhered to.

Servicing

Sensors are maintenance-free.

Before any service work on the sensor is carried out, it is essential to isolate the sensor from the power supply (by unplugging the electrical cables if necessary). Any pumps in the part of the piping system concerned must also be switched off and the appropriate slide valves closed (allow all components to cool down first if necessary and always reduce the system pressure to ambient pressure level).

The system must not be returned to service until the sensor has been correctly reassembled in accordance with the instructions and the pipeline has been refilled by professionally trained personnel.

Flow direction

The direction of flow, specified by an arrow on the housing, is to be complied with, since otherwise the flow rate will be measured incorrectly.

Avoiding cavitation

To avoid cavitation, the system pressure at the outlet of the flow sensor must be a minimum of 1.0 bar at FS (maximum measurable flow) and temperatures up to 90°C.

At a temperature of 120°C the system pressure at the outlet of the flow sensor must be at least 2.5 bar.

Cleaning of pipes

Before installing the flow sensor, the loop must be thoroughly rinsed to remove impurities.

Prevention of stresses

The flow sensor must not be subjected to excessive stress caused by pipes or fittings.

Parts included

Insulation shell for thermal energy meter

Accessories

Optional accessories

Description	Type
Pipe connector DN 15 Rp 1/2", Set of 2 pcs.	EXT-EF-15D
Insulation shell for thermal energy meter DN 15...25	A-22PEM-A01
Pipe connector DN 20 Rp 3/4", Set of 2 pcs.	EXT-EF-20D
Pipe connector DN 25 Rp 1", Set of 2 pcs.	EXT-EF-25D
Pipe connector DN 32 Rp 1 1/4", Set of 2 pcs.	EXT-EF-32D
Insulation shell for thermal energy meter DN 32...50	A-22PEM-A02
Pipe connector DN 40 Rp 1 1/2", Set of 2 pcs.	EXT-EF-40D
Pipe connector DN 50 Rp 2", Set of 2 pcs.	EXT-EF-50D

Tools

Description	Type
Belimo Assistant App, Smartphone app for easy commissioning, parametrising and maintenance	Belimo Assistant App
Converter Bluetooth / NFC	ZIP-BT-NFC

Service

NFC connection

Belimo equipment marked with the NFC logo can be operated and parameterized with the Belimo Assistant App.

Requirement:

- NFC- or Bluetooth-capable smartphone
- Belimo Assistant App (Google Play & Apple AppStore)

Align NFC-capable smartphone on the sensor so that both NFC antennas are superposed.

Connect Bluetooth-enabled smartphone via the Bluetooth-to-NFC Converter ZIP-BT-NFC to the sensor. Technical data and operation instructions are shown in the ZIP-BT-NFC data sheet.

Readable values: volumetric flow, accumulated flow, fluid temperature, glycol content in %, alarm/error messages

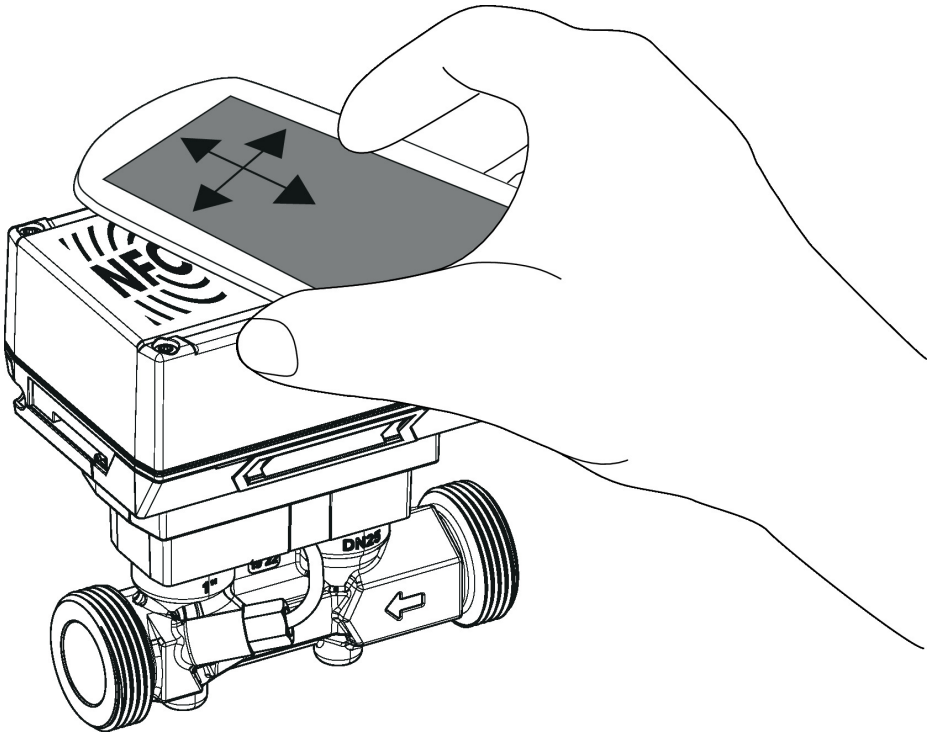

Wiring diagram

Notes

Supply from isolating transformer.

The wiring of the line for BACnet MS/TP / Modbus RTU is to be carried out in accordance with applicable RS-485 regulations.

Modbus / BACnet: Supply and communication are not galvanically isolated. Connect earth signal of the devices with one another.

Sensor connection: An additional sensor can optionally be connected to the flow sensor. This can be an active sensor with output DC 0...10 V (max. DC 0...32 V with resolution 30 mV) or a switching contact (switching current min. 16 mA @ 24 V). Thus the analogue signal of the sensor can be easily digitised with the flow sensor and transferred to the corresponding bus system.

Analogue output: An analogue output (wire 5) is available on the flow sensor. It can be selected as 0...10 V, 0.5...10 V, 2...10 V or user defined. For example, the flow rate or the temperature of the temperature sensor (Pt1000 - EN 60751, 2-wire technology) can be output as an analogue value.

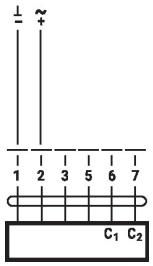

Cable colours:
1 = black, GND
2 = red, AC/DC 24 V
3 = white, Sensor optional
5 = orange, DC 0...10 V, MP-Bus
6 = pink, C1 = D- = A
7 = grey, C2 = D+ = B

AC/DC 24 V, output signal

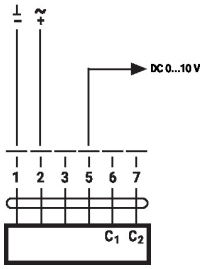

BACnet MS/TP / Modbus RTU

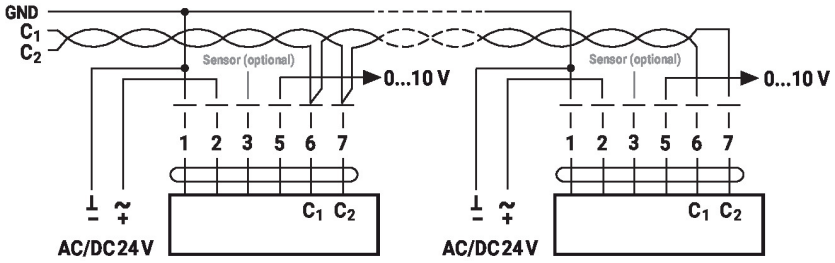

MP-Bus, supply via 3-wire connection

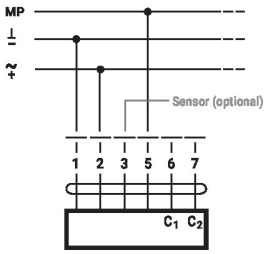

MP-Bus via 2-wire connection, local power supply

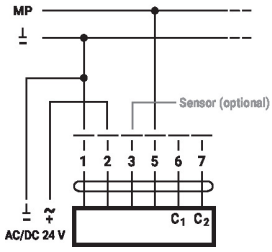

Connection with active sensor

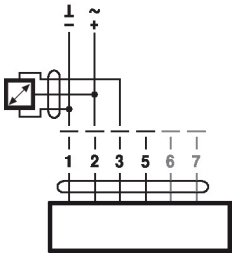

Connection with switching contact

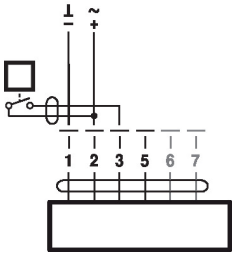

Dimensions

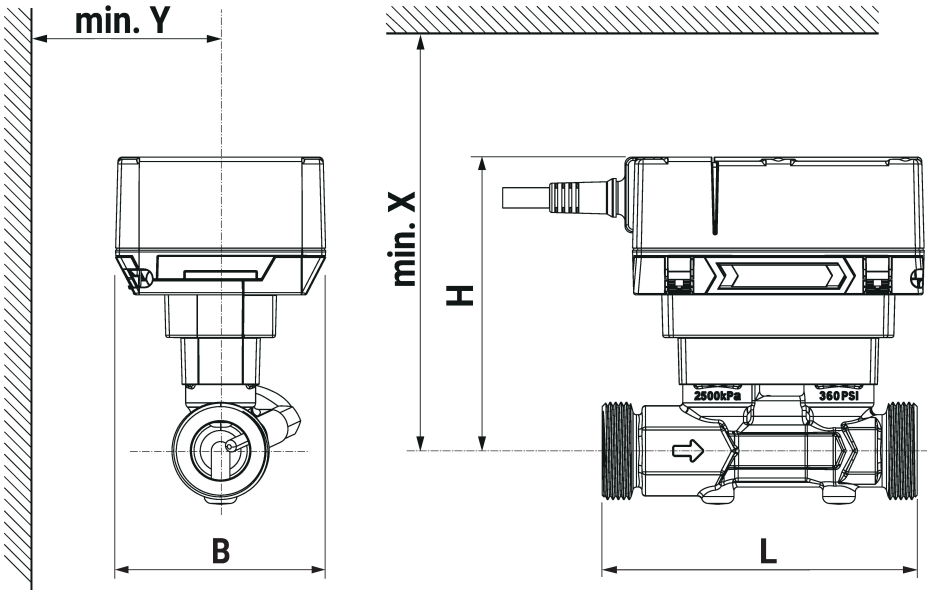

Type	DN	L [mm]	B [mm]	H [mm]	X [mm]	Y [mm]	Weight
22PF-1UC	15	110	91	123	193	85	0.96 kg
22PF-1UD	20	130	91	123	193	85	1.09 kg
22PF-1UE	25	135	91	127	197	85	1.27 kg
22PF-1UF	32	140	91	130	200	85	1.42 kg
22PF-1UG	40	145	91	134	204	85	1.75 kg

Type	DN	L [mm]	B [mm]	H [mm]	X [mm]	Y [mm]	Weight
22PF-1UH	50	145	91	139	209	85	2.19 kg

Further documentation

- Overview MP Cooperation Partners
- Description Data-Pool Values
- BACnet Interface description
- Modbus Interface description
- Installation instructions