Characterised control valve with sensor-operated flow rate or power control, power and energy-monitoring function, 2-way, Flange, PN 16 (Energy Valve)

- Nominal voltage AC/DC 24 V
- Control modulating, communicative, hybrid, Cloud
- For closed water systems
- For modulating control of air-handling and heating systems on the water side
- Ethernet 10/100 Mbit/s, TCP/IP, integrated web server
- Communication via BACnet, Modbus, Belimo MP-Bus or conventional control
- optional Belimo Cloud connection
- Glycol monitoring

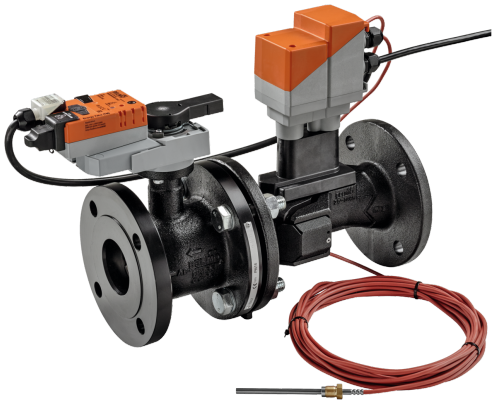

Picture may differ from product

Type Overview

Type	DN	V'nom [l/s]	V'nom [l/min]	V'nom [m³/h]	Kvs theor. [m³/h]	PN
EV065F+BAC	65	8	480	28.8	50	16
EV080F+BAC	80	11	660	39.6	75	16
EV100F+BAC	100	20	1200	72	127	16
EV125F+BAC	125	31	1860	111.6	195	16
EV150F+BAC	150	45	2700	162	254	16

Kvs theor.: theoretical Kvs value for pressure drop calculation

Technical data

Electrical data	Nominal voltage	AC/DC 24 V
	Nominal voltage frequency	50/60 Hz
	Nominal voltage range	AC 19.2...28.8 V / DC 21.6...28.8 V
	Power consumption in operation	7 W
	Power consumption in rest position	5 W
	Power consumption for wire sizing	6 VA (DN 65, 80) 11 VA (DN 100, 125, 150)
	Connection supply / control	Cable 1 m, 6x 0.75 mm²
	Connection Ethernet	RJ45 socket
	Parallel operation	Yes (note the performance data)
Data bus communication	Communicative control	BACnet/IP, BACnet MS/TP Modbus TCP, Modbus RTU MP-Bus Cloud
	Number of nodes	BACnet / Modbus see interface description MP-Bus max. 8
Functional data	Operating range Y	2...10 V
	Input impedance	100 kΩ
	Operating range Y variable	0.5...10 V
	Position feedback U	2...10 V
	Position feedback U note	Max. 1 mA
	Position feedback U variable	0...10 V 0.5...10 V
	Sound power level Motor	45 dB(A)

Functional data	V'max adjustable	30...100% of V'nom
	Control accuracy	±5% (of 25...100% V'nom) @ 20°C / Glycol 0% vol.
	Control accuracy note	±10% (of 25...100% V'nom) @ -10...120°C / Glycol 0...50% vol.
	Min. controllable flow	1% of V'nom
	Configuration	via integrated web server / ZTH EU
	Fluid	Water, water with glycol up to max. 50% vol.
	Fluid temperature	-10...120°C [14...248°F]
	Close-off pressure Δps	690 kPa
	Differential pressure Δpmax	340kPa
	Flow characteristic	equal percentage (VDI/VDE 2173), optimised in the opening range
	Flow characteristic note	switchable to linear (VDI/VDE 2173)
	Leakage rate	air-bubble tight, leakage rate A (EN 12266-1)
	Pipe connection	Flange according to EN 1092-2
	Installation orientation	upright to horizontal (in relation to the spindle)
	Servicing	maintenance-free
	Manual override	with push-button, can be locked
Temperature measurement	Measuring accuracy absolute temperature	± 0.35°C @ 10°C (Pt1000 EN60751 Class B) ± 0.6°C @ 60°C (Pt1000 EN60751 Class B)
	Measuring accuracy differential temperature	±0.18 K @ ΔT = 10 K ±0.23 K @ ΔT = 20 K
	Resolution	0.05°C
Flow measurement	Measuring principle	Ultrasonic volumetric flow measurement
	Measuring accuracy flow	±2% (of 25...100% V'nom) @ 20°C / glycol 0% vol.
	Measuring accuracy flow note	±6% (of 25...100% V'nom) @ -10...120°C / glycol 0...50% vol.
	Min. flow measurement	0.5% of V'nom
Glycol monitoring	Measurement display glycol	0...40% or >40%
	Measuring accuracy glycolmonitoring	±4% (0...40%)
Safety data	Protection class IEC/EN	III, Safety Extra-Low Voltage (SELV)
	Degree of protection IEC/EN	IP40 IP54 when using protective cap or protective grommet for RJ45 socket
	Pressure equipment directive	CE according to 2014/68/EU
	EMC	CE according to 2014/30/EU
	Type of action	Type 1
	Rated impulse voltage supply / control	0.8 kV
	Pollution degree	3
	Ambient humidity	Max. 95% RH, non-condensing
	Ambient temperature	-30...50°C [-22...122°F]
	Storage temperature	-40...80°C [-40...176°F]
Materials	Valve body	EN-GJL-250 (GG 25)
	Flow measuring pipe	EN-GJL-250 (GG 25), with protective paint

Technical data

Materials

Closing element	Stainless steel AISI 316
Spindle	Stainless steel AISI 304
Spindle seal	EPDM
Seat	PTFE, O-ring Viton
Immersion sleeve	Stainless steel AISI 316

Safety notes

- This device has been designed for use in stationary heating, ventilation and air-conditioning systems and must not be used outside the specified field of application, especially in aircraft or in any other airborne means of transport.
- Outdoor application: only possible in case that no (sea) water, snow, ice, insolation or aggressive gases interfere directly with the device and that it is ensured that the ambient conditions remain within the thresholds according to the data sheet at any time.
- Only authorised specialists may carry out installation. All applicable legal or institutional installation regulations must be complied with during installation.
- The device contains electrical and electronic components and must not be disposed of as household refuse. All locally valid regulations and requirements must be observed.

Product features

Operating mode

The HVAC performance device is comprised of four components: characterised control valve (CCV), measuring pipe with flow sensor, temperature sensors and the actuator itself. The adjusted maximum flow (V'max) is assigned to the maximum control signal DDC (typically 10 V / 100%). Alternatively, the control signal DDC can be assigned to the valve opening angle or to the power required on the heat exchanger (see power control). The HVAC performance device can be controlled via communicative or analogue signals. The fluid is detected by the sensor in the measuring pipe and is applied as the flow value. The measured value is balanced with the setpoint. The actuator corrects the deviation by changing the valve position. The angle of rotation α varies according to the differential pressure through the control element (see flow curves).

Flow rate curves

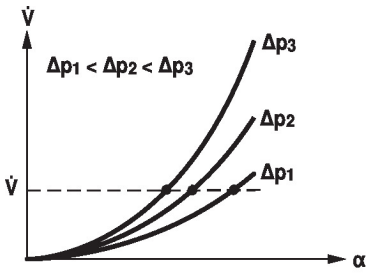

Transmission behaviour HE

Heat exchanger transmission behaviour

Depending on the construction, temperature spread, fluid characteristics and hydronic circuit, the power Q is not proportional to the water volumetric flow V' (Curve 1). With the classical type of temperature control, an attempt is made to maintain the control signal Y proportional to the power Q (Curve 2). This is achieved by means of an equal-percentage flow characteristic (Curve 3).

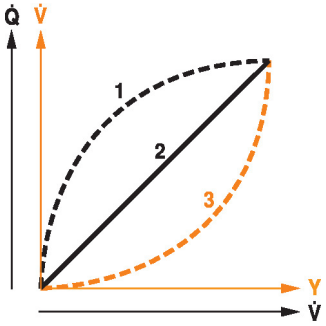

Power control

Alternatively, the control signal DDC can be assigned to the output power required at the heat exchanger.

Depending on the water temperature and air conditions, the Energy Valve ensures the amount of water V' required to achieve the desired power.

Maximum controllable power on heat exchanger in power control mode:

DN 65	1700 kW
DN 80	2400 kW
DN 100	4200 kW
DN 125	6500 kW
DN 150	9500 kW

Control characteristics

The specially configured control parameters in connection with the precise velocity sensor ensure a stable quality of control. They are, however, not suitable for rapid control processes, i.e. for domestic water control.

Power control

Q'nom is the maximum possible power output on the heat exchanger.

Q'max is the maximum power output on the heat exchanger which has been set with the highest control signal DDC. Q'max can be set between 1% and 100% of Q'nom.

Q'min 0% (non-variable).

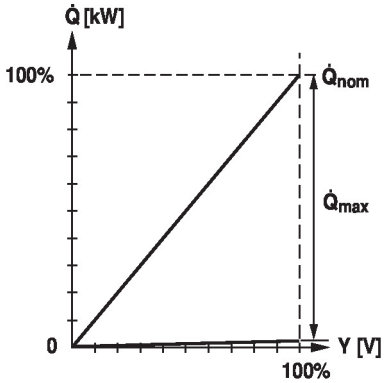

Flow control

V'nom is the maximum possible flow.

V'max is the maximum flow rate which has been set with the highest control signal. V'max can be set between 30% and 100% of V'nom.

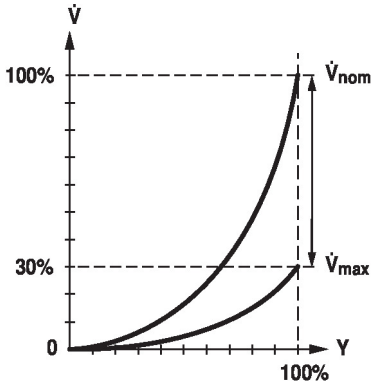

Creep flow suppression

Given the very low flow speed in the opening point, this can no longer be measured by the sensor within the required tolerance. This range is overridden electronically.

Opening valve

The valve remains closed until the flow required by the control signal DDC corresponds to 1% of V'nom. The control along the flow characteristic is active after this value has been exceeded.

Closing valve

The control along the flow characteristic is active up to the required flow rate of 1% of V'nom. Once the level falls below this value, the flow rate is maintained at 1% of V'nom. If the level falls below the flow rate of 0.5% of V'nom required by the control signal DDC, then the valve will close.

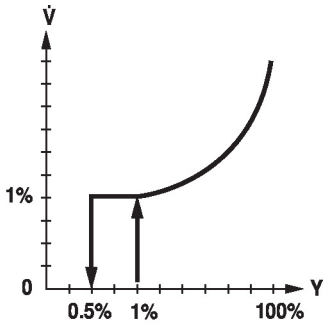

Configurable device

The factory settings cover the most common applications. Single parameters can be modified with Belimo Assistant 2 or ZTH EU.

Communication

The configuration can be carried out through the integrated web server (RJ45 connection to the web browser) or by communicative means.

Additional information regarding the integrated web server can be found in the separate documentation.

"Peer to Peer" connection
http://belimo.local:8080
The Notebook must be set to "DHCP".
Make sure that only one network connection is active.

Standard IP address:
http://192.168.0.10:8080
Static IP address

Password (read-only):
User name: «guest»
Password: «guest»

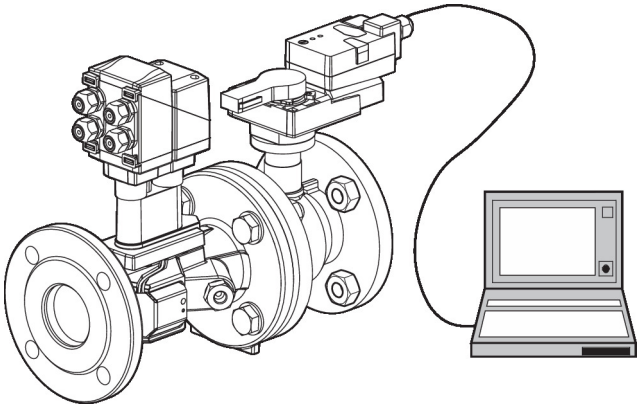

Control signal inversion

This can be inverted in cases of control with an analogue control signal DDC. The inversion causes the reversal of the standard behaviour, i.e. at a control signal DDC of 0%, regulation is to V'max or Q'max, and the valve is closed at a control signal DDC of 100%.

Hydronic balancing

Via the integrated web server, the maximum flow rate (equivalent to 100% requirement) can be adjusted on the device itself, simply and reliably, in a few steps. If the device is integrated in the management system, then the balancing can be handled directly by the management system.

Delta-T manager

If a heating or cooling register is operated with a differential temperature that is too low and thus with a flow rate that is too high, this will not result in an increased power output.

Nevertheless, heating or cooling machines must provide the energy at a lower degree of efficiency. This means, that pumps circulate too much water and increase energy consumption unnecessarily.

With the aid of the Energy Valve, it is simple to discover that operation is being carried out at a differential temperature that is too low, resulting in the inefficient use of energy.

Necessary setting adjustments can now be carried out quickly and easily at any time. The integrated differential temperature limiting offers the user the possibility of defining a low limit value. The Energy Valve limits the flow rate automatically to prevent the level from falling below this value.

The settings of the Delta-T manager can be made either directly on the web server or via the Belimo Cloud a direct analysis of the Delta-T behavior is carried out by Belimo experts.

Power output of the heating or cooling registers 1
Diff. temperature between supply and return 2
Loss zone (heating or cooling register saturation) 3
Adjustable minimum differential temperature 4

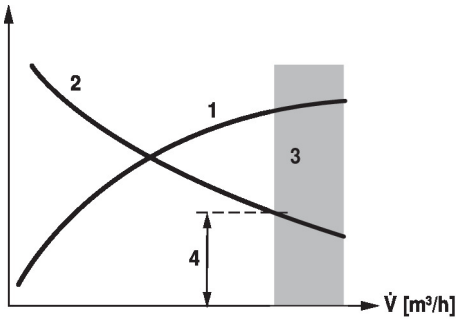

Combination analogue - communicative (hybrid mode)

With conventional control by means of an analogue control signal DDC, the integrated web server, BACnet, Modbus or MP-Bus can be used for the communicative position feedback.

Product features

Power and energy monitoring function

The HVAC performance device is equipped with two temperature sensors. One sensor (T2) is integrated in the measuring pipe, the second sensor (T1) is included with the system, prewired, and must be installed in the water circuit on site. The sensors are used to record the fluid temperature of the supply and return lines of the consumer (heating/cooling coil). As the water quantity is also known, thanks to the flow measurement integrated in the system, the power released from the consumer can be calculated. Furthermore, the heating/cooling energy is also determined automatically by means of the evaluation of the power over time.

The current data, e.g. temperatures, volumetric flow volumes, exchanger energy consumption etc. can be recorded and accessed at any time by means of web browsers or communication.

Data recording

The recorded data (integrated data recording for 13 months) can be used for the optimisation of the overall system and for the determination of the performance of the consumer (heating/cooling coil).

Download csv files through web browser.

Belimo Cloud

Additional services are available if the Energy Valve is connected to the Belimo Cloud: for instance, several devices may be managed via Internet. Also, Belimo experts may help analyse the delta-T behaviour or provide written reports about the Energy Valve performance. Under certain conditions, the product warranty according to the applicable Terms and Conditions of Sale may be prolonged. The "Terms of Use for Belimo Cloud Services" in their currently valid version apply to the use of Belimo Cloud services. Further details may be found under [www.belimo.com/ext-warranty]

Glycol monitoring

Glycol monitoring measures the actual glycol content, which is necessary for safe operation and optimised heat exchange.

Manual override

Manual override with push-button possible (the gear train is disengaged for as long as the button is pressed or remains locked).

High functional safety

The actuator is overload protected, requires no limit switches and automatically stops when the end stop is reached.

Accessories

Tools

Description	Type
Service tool, with ZIP-USB function, for configurable and communicative Belimo actuators, VAV controller and HVAC performance devices	ZTH EU
Connecting cable 5 m, A: RJ11 6/4 ZTH EU, B: 6-pin for connection to service socket	ZK1-GEN

Electrical accessories

Description	Type
Grommet for RJ connection module, Multipack 50 pcs.	Z-STRJ.1
Stem heater flange F05 (30 W)	ZR24-F05

Electrical installation

Supply from isolating transformer.

Parallel connection of other actuators possible. Observe the performance data.

The wiring of the line for BACnet MS/TP / Modbus RTU is to be carried out in accordance with applicable RS-485 regulations.

Modbus / BACnet: Supply and communication are not galvanically isolated. COM and ground of the devices must be connected to each other.

Electrical installation

Wire colours:
1 = black
2 = red
3 = white
5 = orange
6 = pink
7 = grey

Functions:
C1 = D- = A (wire 6)
C2 = D+ = B (wire 7)

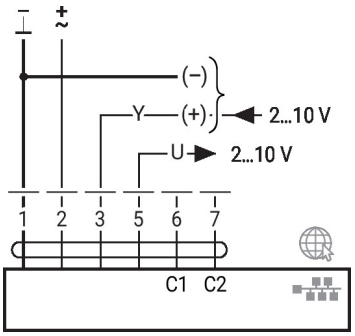

BACnet MS/TP / Modbus RTU

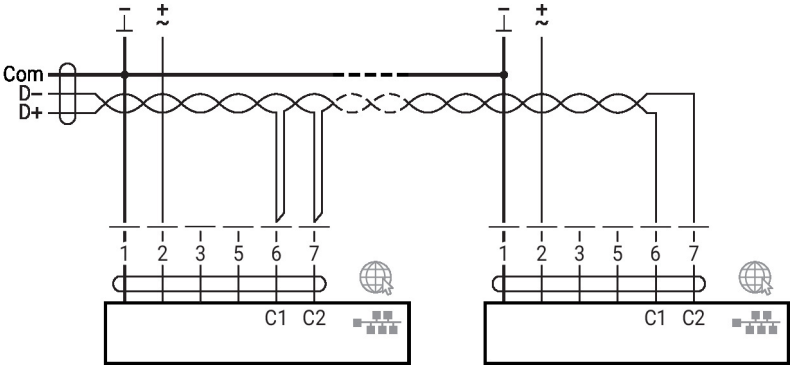

BACnet/IP / Modbus TCP

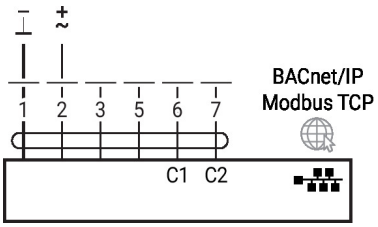

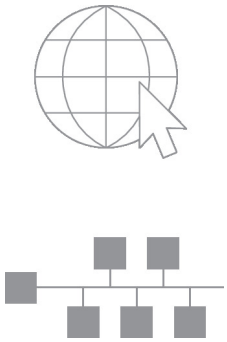

Optional connection via RJ45 (direct connection to notebook / connection via Intranet or Internet) for access to the integrated web server

Further electrical installations

Functions with specific parameters (configuration necessary)

Override control and limiting with DC 24 V with relay contacts (with conventional control or hybrid mode)

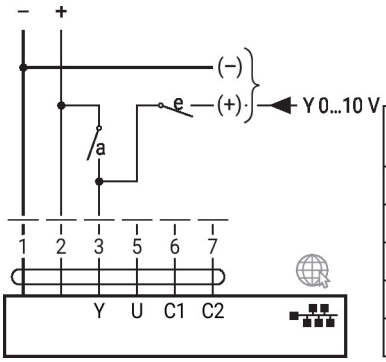

1	2	a	e	
L	L	–	–	Close
L	L	–	L	Y
L	L	L	–	Open[1]
L	L	L	–	V'_{max} [2]
L	L	L	–	Q'_{max} [3]

1) Position control
2) Flow control
3) Power control

BACnet MS/TP / Modbus RTU with analogue setpoint (hybrid mode)

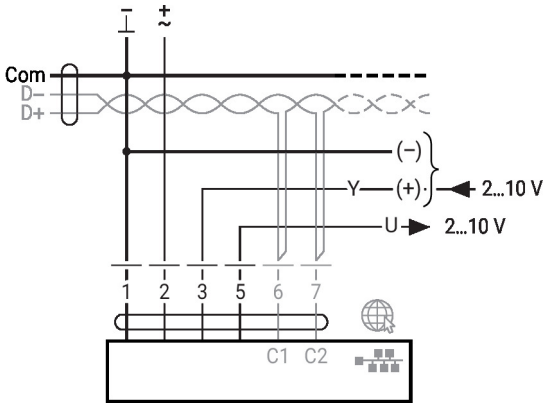

BACnet/IP / Modbus TCP with analogue setpoint (hybrid mode)

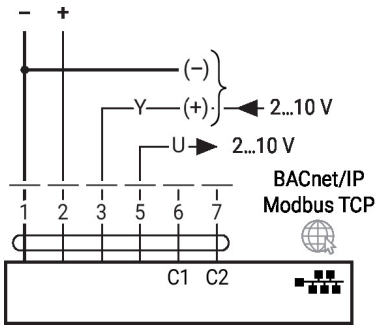

MP-Bus, supply via 3-wire connection

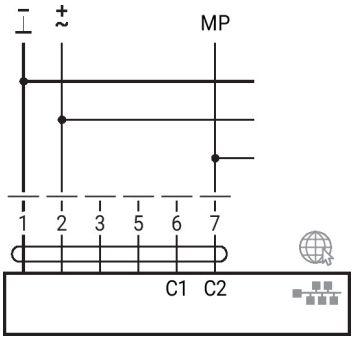

MP-Bus via 2-wire connection, local power supply

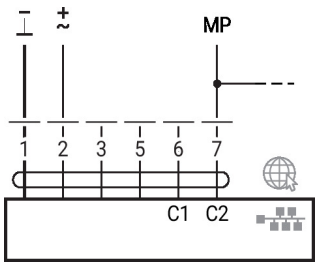

Max. 8 additional MP-Bus nodes

Further electrical installations

Functions with specific parameters (configuration necessary)

MP-Bus with analogue setpoint (hybrid mode)

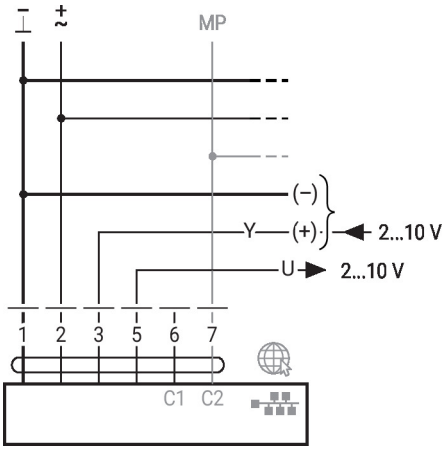

Operating controls and indicators

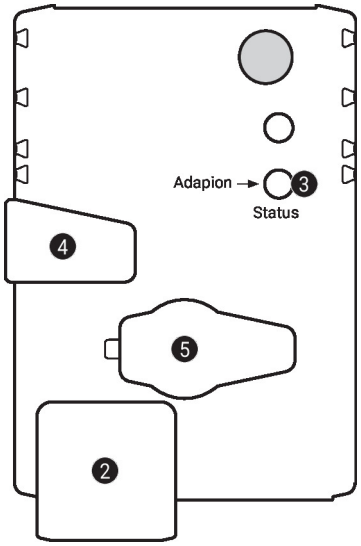

2 LED display green

Off:	No power supply or wiring error
On:	In operation
Flickering:	Internal communication (Valve/Sensor)

3 Push-button and LED display yellow

On:	Adaptation or synchronisation process active
Press button:	Triggers angle of rotation adaptation, followed by standard mode

4 Manual override button

Press button:	Gear train disengages, motor stops, manual override possible
Release button:	Gear train engages, standard mode

5 Service plug
For connecting configuration and service tools

Installation notes

Permissible installation orientation

The ball valve can be installed upright to horizontal. The ball valve may not be installed in a hanging position, i.e. with the spindle pointing downwards.

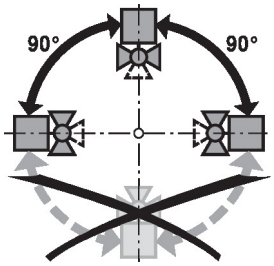

Installation location in return

Installation in the return is recommended.

Water quality requirements

The water quality requirements specified in VDI 2035 must be adhered to.

Belimo valves are regulating devices. For the valves to function correctly in the long term, they must be kept free from particle debris (e.g. welding beads during installation work). The installation of a suitable strainer is recommended.

Spindle heater

In cold water applications and warm humid ambient air, condensation can be caused in the actuators. This can lead to corrosion in the gear train of the actuator and a breakdown of the actuator. In such applications, the use of a spindle heater is recommended.

The spindle heater must only be activated when the system is in operation because it does not have a temperature controller.

Servicing

Ball valves, rotary actuators and sensors are maintenance-free.

Before any service work on the control element is carried out, it is essential to isolate the rotary actuator from the power supply (by unplugging the electrical cable if necessary). Any pumps in the part of the piping system concerned must also be switched off and the appropriate slide valves closed (allow all components to cool down first if necessary and always reduce the system pressure to ambient pressure level).

The system must not be returned to service until the ball valve and the rotary actuator have been correctly reassembled in accordance with the instructions and the pipeline has been refilled by professionally trained personnel.

Flow direction

The direction of flow, specified by an arrow on the housing, is to be complied with, since otherwise the flow rate will be measured incorrectly.

Inlet section

In order to achieve the specified measuring accuracy, a flow-calming section or inflow section in the direction of the flow is to be provided upstream from the flow sensor. Its dimensions should be at least 5x DN.

DN	L min.
65	5 x 65 mm = 325 mm
80	5 x 80 mm = 400 mm
100	5 x 100 mm = 500 mm
125	5 x 125 mm = 625 mm
150	5 x 150 mm = 750 mm

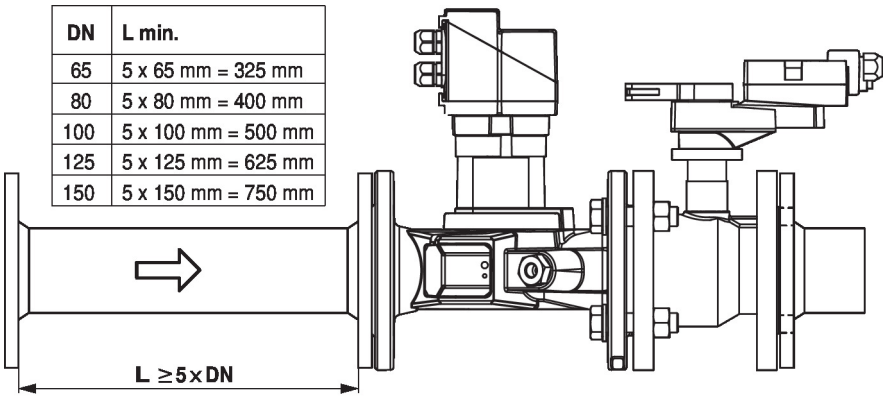

Installation notes

Mounting of immersion sleeve and temperature sensor

The valve is equipped with two temperature sensors:

• T2: One sensor is already installed in the valve unit.

• T1: The second sensor must be mounted at the installation site ahead of the consumer (valve in the return line; recommended) or after the consumer (valve in the supply line). The immersion sleeve required is supplied with the valve unit.

The temperature sensor is already wired with the valve.

Note

The cable between valve unit and temperature sensor may not be either shortened or lengthened.

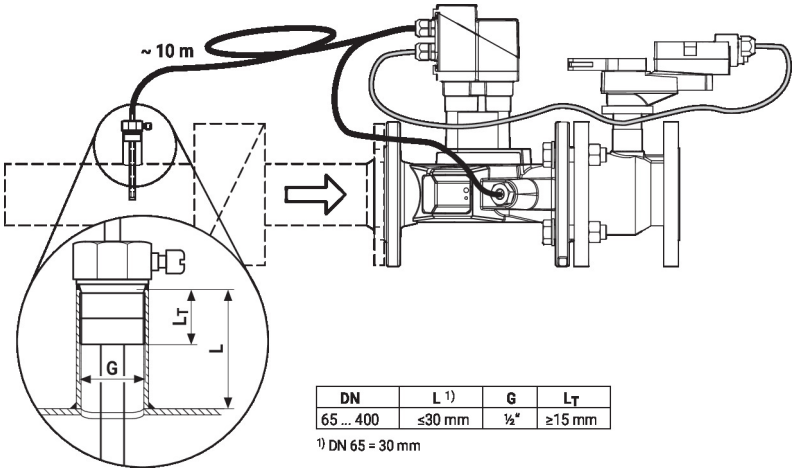

DN	L [1]	G	L_T
65 ... 400	≤30 mm	½"	≥15 mm

[1] DN 65 = 30 mm

Split installation

The valve-actuator combination may be mounted separately from the flow sensor. The direction of flow of both components must be observed.

General notes

Minimum differential pressure (pressure drop)

The minimum required differential pressure (pressure drop through the valve) for achieving the desired volumetric flow V'max can be calculated with the aid of the theoretical Kvs value (see type overview) and the below-mentioned formula. The calculated value is dependent on the required maximum volumetric flow V'max. Higher differential pressures are compensated for automatically by the valve.

Formula

$$\Delta p_{min} = 100 \times \left(\frac{V'_{max}}{K_{vs}\ theor.} \right)^2$$

Δp_{min}: kPa
V'_{max}: m³/h
K_{vs} theor.: m³/h

Example (DN 100 with the desired maximum flow rate = 50% V'nom)

EV100F+BAC
K_{vs} theor. = 127 m³/h
V'_{nom} = 1200 l/min
50% * 1200 l/min = 600 l/min = 36 m³/h

$$\Delta p_{min} = 100 \times \left(\frac{V'_{max}}{K_{vs}\ theor.} \right)^2 = 100 \times \left(\frac{36\ m^3/h}{127\ m^3/h} \right)^2 = 8\ kPa$$

Behaviour in case of sensor failure

In case of a flow sensor error, the Energy Valve will switch from either power or flow control to position control (Delta-T manger will be deactivated).

Once the error disappears, the Energy Valve will switch back to the normal control setting (Delta-T manager activated)

Dimensions

Dimensional drawings

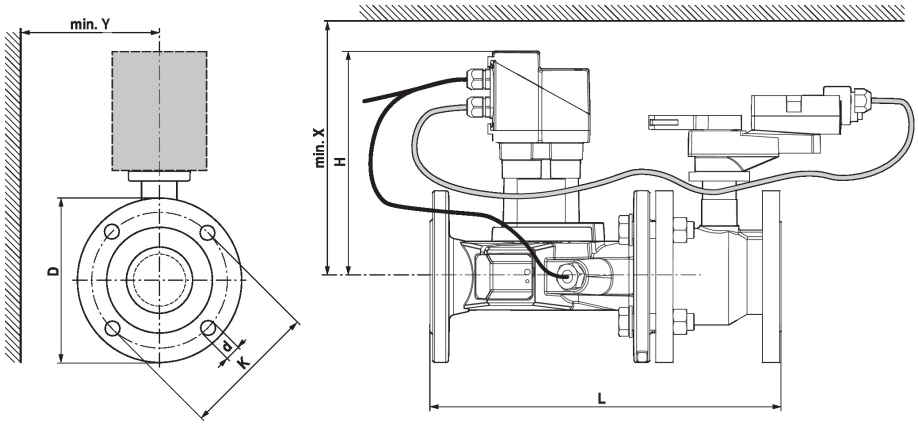

If Y <180 mm, the extension of the hand crank must be demounted as necessary.

Type	DN	L [mm]	H [mm]	D [mm]	d [mm]	K [mm]	X [mm]	Y [mm]	kg
EV065F+BAC	65	379	243	185	4 x 19	145	265	150	26
EV080F+BAC	80	430	250	200	8 x 19	160	270	160	32
EV100F+BAC	100	474	252	230	8 x 19	180	275	175	46
EV125F+BAC	125	579	259	255	8 x 19	210	280	190	62
EV150F+BAC	150	651	269	285	8 x 23	240	290	200	74

Further documentation

- Tool connections
- BACnet Interface description
- Modbus Interface description
- Description Data-Pool Values
- Overview MP Cooperation Partners
- MP Glossary
- Introduction to MP-Bus Technology
- General notes for project planning
- Instruction Webserver