Characterised control valve with thermal energy meter, sensor-operated flow or power control, power and energy monitoring function, 2-way, internal and external thread, PN 25

- Nominal voltage AC/DC 24 V
- Control modulating, communicative, hybrid
- For closed cold and warm water systems
- For modulating control of air-handling and heating systems on the water side
- Ethernet 10/100 Mbit/s, TCP/IP, integrated web server
- Communication via BACnet, Modbus, Belimo MP-Bus or conventional control
- PoE (Power over Ethernet) Power supply possible
- Conversion of sensor signals
- Glycol monitoring

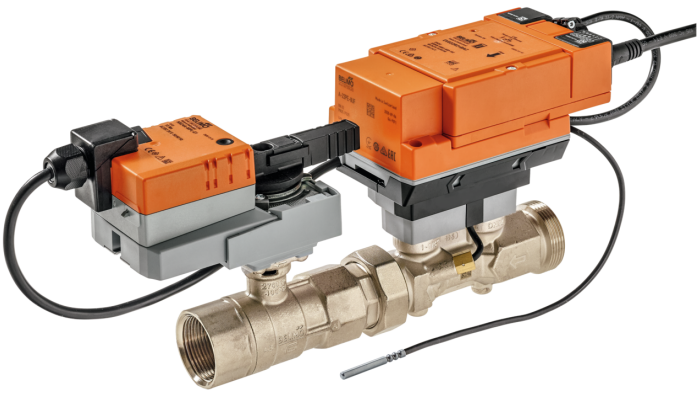

Type Overview

Type	DN	Rp ["]	G ["]	V'nom [l/s]	V'nom [l/min]	V'nom [m³/h]	kvs theor. [m³/h]	PN
EV015R2+BAC	15	1/2	3/4	0.42	25	1.5	3.2	25
EV020R2+BAC	20	3/4	1	0.69	41.7	2.5	5.3	25
EV025R2+BAC	25	1	1 1/4	0.97	58.3	3.5	8.8	25
EV032R2+BAC	32	1 1/4	1 1/2	1.67	100	6	14.1	25
EV040R2+BAC	40	1 1/2	2	2.78	166.7	10	19.2	25
EV050R2+BAC	50	2	2 1/2	4.17	250	15	30.4	25

kvs theor.: Theoretical kvs value for pressure drop calculation

Structure

Components

The Belimo Energy Valve consists of a characterised control valve, an actuator and a thermal energy meter with a logic and a sensor module.

The logic module provides the power supply, the communication interface and the NFC connection of the energy meter. All relevant data are measured and recorded in the sensor module.

This modular design of the energy meter means that the logic module can remain in the system if the sensor module is replaced.

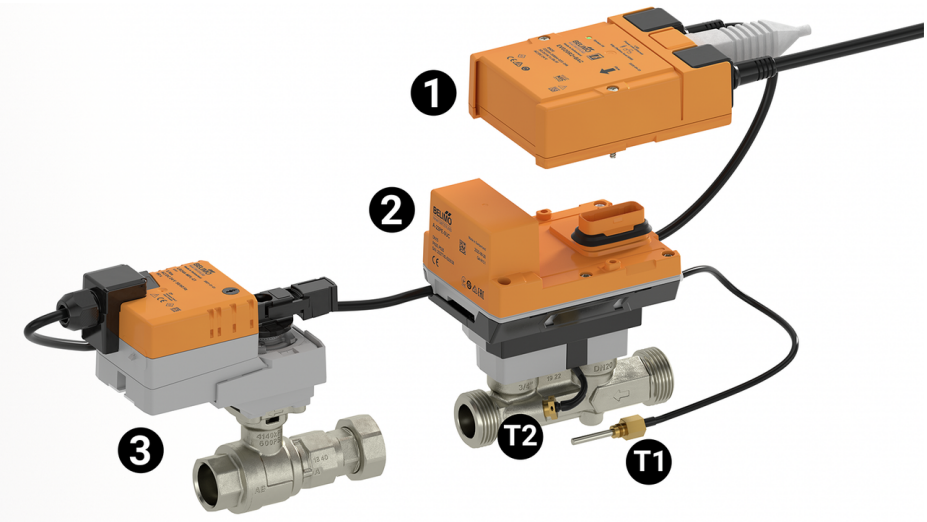

External temperature sensor T1
Integrated temperature sensor T2
Logic module 1
Sensor module 2
Characterised control valve with actuator 3

Technical data

Electrical data	Nominal voltage	AC/DC 24 V
	Nominal voltage frequency	50/60 Hz
	Nominal voltage range	AC 19.2...28.8 V / DC 21.6...28.8 V
	Power consumption in operation	4 W (DN 15, 20, 25) 5 W (DN 32, 40, 50)
	Power consumption in rest position	3.7 W (DN 15, 20, 25) 3.9 W (DN 32, 40, 50)
	Power consumption for wire sizing	6.5 VA (DN 15, 20, 25) 7.5 VA (DN 32, 40, 50)
	Connection supply / control	Cable 1 m, 6x 0.75 mm^2
	Connection Ethernet	RJ45 socket
	Power over Ethernet PoE	DC 37...57 V 11 W (PD13W) IEEE 802.3af/at, Type 1, Class 3
	Conductors, cables	AC/DC 24 V, cable length <100 m, no shielding or twisting required Shielded cables are recommended for supply via PoE
Data bus communication	Communicative control	BACnet/IP, BACnet MS/TP Modbus TCP, Modbus RTU MP-Bus Cloud
	Number of nodes	BACnet / Modbus see interface description MP-Bus max. 8
Functional data	Operating range Y	2...10 V
	Input impedance	100 kΩ
	Operating range Y variable	0.5...10 V
	Position feedback U	2...10 V
	Position feedback U note	Max. 1 mA
	Position feedback U variable	0...10 V 0.5...10 V
	Sound power level Motor	35 dB(A) (DN 15, 20, 25, 32, 40) 45 dB(A) (DN 50)
	V'max adjustable	25...100% of V'nom
	Control accuracy	±5% (of 25...100% V'nom)
	Control accuracy note	±10% (of 25...100% V'nom) @ Glycol 0...60% vol.
	Min. controllable flow	1% of V'nom
	Parametrisation	via NFC, Belimo Assistant App via integrated web server
	Fluid	Cold and warm water, water with glycol up to max. 60% vol.
	Fluid temperature	-10...120°C [14...248°F]
	Close-off pressure Δps	1400 kPa
	Differential pressure Δpmax	350kPa
	Differential pressure note	200 kPa for low-noise operation
	Flow characteristic	equal percentage, optimised in the opening range (switchable to linear)
	Leakage rate	air-bubble tight, leakage rate A (EN 12266-1)
	Pipe connection	Internal and external thread

Technical data

Functional data	Servicing	maintenance-free
	Manual override	with push-button, can be locked
Measuring data	Measured values	Flow Fluid temperature supply Fluid temperature return
	Temperature sensor	Pt1000 - EN 60751, 2-wire technology, inseparably connected Cable length external sensor T1: 3 m T2 integrated in flow sensor
Temperature measurement	Measuring accuracy absolute temperature	± 0.35°C @ 10°C (Pt1000 EN60751 Class B) ± 0.6°C @ 60°C (Pt1000 EN60751 Class B)
	Measuring accuracy temperature difference	±0.22 K @ ΔT = 10 K ±0.32 K @ ΔT = 20 K
Flow measurement	Measuring principle	Ultrasonic volumetric flow measurement
	Measuring accuracy flow	±2% (of 20...100% V'nom) @ 20°C / glycol 0% vol.
	Measuring accuracy flow note	EN 1434 Class 2 @ 15...120°C ±5% (of 20...100% V'nom) @ glycol 0...60% vol.
	Min. flow measurement	0.5% of V'nom
Glycol monitoring	Measurement display glycol	0...60% or >60%
	Measuring accuracy glycolmonitoring	±4% (0...60%)
Safety data	Protection class IEC/EN	III, Protective Extra-Low Voltage (PELV)
	Degree of protection IEC/EN	IP54 Logic module: IP54 (with grommet A-22PEM-A04) Sensor module: IP65
	Measuring Instruments Directive	CE according to 2014/32/EU
	Pressure equipment directive	CE according to 2014/68/EU
	EMC	CE according to 2014/30/EU
	Certification IEC/EN	IEC/EN 60730-1:11 and IEC/EN 60730-2-15:10
	Quality Standard	ISO 9001
	Type of action	Type 1
	Rated impulse voltage supply / control	0.8 kV
	Pollution degree	3
	Ambient humidity	Max. 95% RH, non-condensing
	Ambient temperature	-30...50°C [-22...122°F]
	Storage temperature	-40...80°C [-40...176°F]
Materials	Valve body	Brass
	Flow measuring pipe	Brass body nickel-plated
	Closing element	Stainless steel
	Spindle	Stainless steel
	Spindle seal	EPDM O-ring
	Immersion sleeve	Stainless steel

Safety notes

- This device has been designed for use in stationary heating, ventilation and air-conditioning systems and must not be used outside the specified field of application, especially in aircraft or in any other airborne means of transport.
- Outdoor application: only possible in case that no (sea) water, snow, ice, insolation or aggressive gases interfere directly with the device and that it is ensured that the ambient conditions remain within the thresholds according to the data sheet at any time.
- Only authorised specialists may carry out installation. All applicable legal or institutional installation regulations must be complied with during installation.
- The device contains electrical and electronic components and must not be disposed of as household refuse. All locally valid regulations and requirements must be observed.

Product features

Operating mode

The HVAC performance device is comprised of four components: characterised control valve (CCV), measuring pipe with flow sensor, temperature sensors and the actuator itself. The adjusted maximum flow (V'max) is assigned to the maximum control signal DDC (typically 10 V / 100%). Alternatively, the control signal DDC can be assigned to the valve opening angle or to the power required on the heat exchanger (see power control). The HVAC performance device can be controlled via communicative or analogue signals. The fluid is detected by the sensor in the measuring pipe and is applied as the flow value. The measured value is balanced with the setpoint. The actuator corrects the deviation by changing the valve position. The angle of rotation α varies according to the differential pressure through the control element (see flow curves).

Calibration certificate

A calibration certificate is available in the Belimo Cloud for each thermal energy meter. If required, this can be downloaded as a PDF with the Belimo Assistant App or via the Belimo Cloud frontend.

Power calculation

The thermal energy meter calculates the current thermal power based on the current flow rate and the measured temperature difference.

Energy consumption

The energy consumption data can be read out as follows:

- Bus
- Cloud API
- Belimo Cloud Account of the device owner
- Belimo Assistant App
- Integrated web server

PoE (Power over Ethernet)

If necessary, the thermal energy meter can be supplied with power via the Ethernet cable. This function can be enabled via the Belimo Assistant App.

DC 24 V (max. 8 W) is available at wires 1 and 2 for power supply of external devices (e.g. actuator or active sensor).

Caution: PoE may only be enabled if an external device is connected to wires 1 and 2 or if wires 1 and 2 are insulated!

Spare parts

Sensor module of the thermal energy meter consisting of:

- 1 x sensor module including integrated temperature sensor T2 and external temperature sensor T1

Flow rate curves

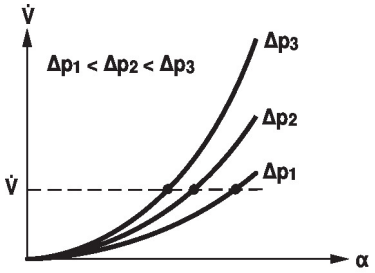

Transmission behaviour HE

Heat exchanger transmission behaviour

Depending on the construction, temperature spread, fluid characteristics and hydronic circuit, the power Q is not proportional to the water volumetric flow V' (Curve 1). With the classical type of temperature control, an attempt is made to maintain the control signal Y proportional to the power Q (Curve 2). This is achieved by means of an equal-percentage flow characteristic (Curve 3).

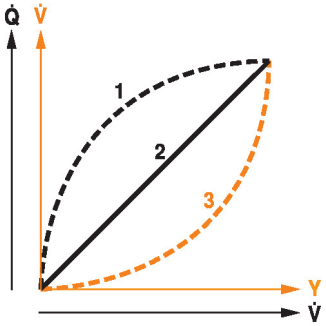

Power control

Alternatively, the control signal DDC can be assigned to the output power required at the heat exchanger.

Depending on the water temperature and air conditions, the Energy Valve ensures the amount of water V' required to achieve the desired power.

Maximum controllable power on heat exchanger in power control mode:

DN 15	90 kW
DN 20	150 kW
DN 25	210 kW
DN 32	350 kW
DN 40	590 kW
DN 50	880 kW

Control characteristics

The specially configured control parameters in connection with the precise velocity sensor ensure a stable quality of control. They are, however, not suitable for rapid control processes, i.e. for domestic water control.

Power control

Q'nom is the maximum possible power output on the heat exchanger.

Q'max is the maximum power output on the heat exchanger which has been set with the highest control signal DDC. Q'max can be set between 1% and 100% of Q'nom.

Q'min 0% (non-variable).

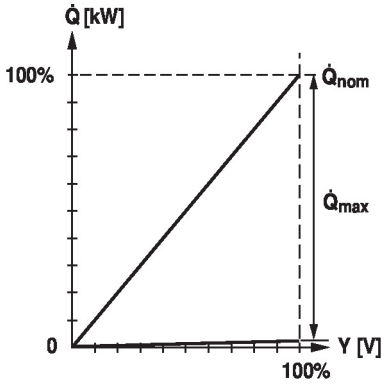

Flow control

V'nom is the maximum possible flow.

V'max is the maximum flow rate which has been set with the highest control signal DDC. V'max can be set between 25% and 100% of V'nom.

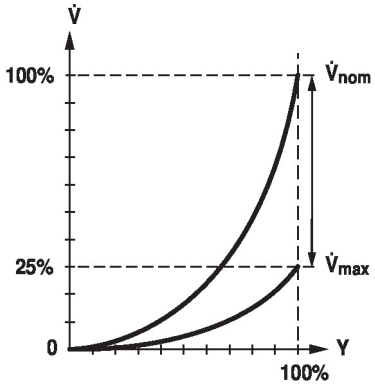

Position control

In this setting, the control signal is assigned to the opening angle of the valve (e.g. Y = 10 V α = 90°).

The result is a pressure-dependent operation similar to that of a conventional valve.

Running time of the motor in this mode is 90 s for 90°.

Creep flow suppression

Given the very low flow speed in the opening point, this can no longer be measured by the sensor within the required tolerance. This range is overridden electronically.

Opening valve

The valve remains closed until the flow required by the control signal DDC corresponds to 1% of V'nom. The control along the flow characteristic is active after this value has been exceeded.

Closing valve

The control along the flow characteristic is active up to the required flow rate of 1% of V'nom. Once the level falls below this value, the flow rate is maintained at 1% of V'nom. If the level falls below the flow rate of 0.5% of V'nom required by the control signal DDC, then the valve will close.

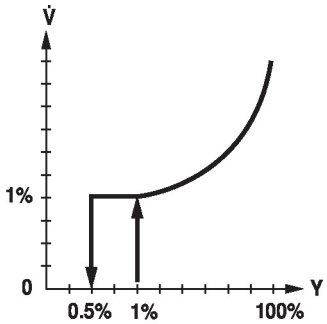

Configurable actuators

The factory settings cover the most common applications.

The parametrisation can be carried out through the integrated web server (RJ45 connection to the web browser) or by communicative means.

Additional information regarding the integrated web server can be found in the separate documentation.

The Belimo Assistant App is required for parametrisation via Near Field Communication (NFC) and simplifies commissioning. Moreover, it provides a variety of diagnostic options.

Communication

The parametrisation can be carried out through the integrated web server (RJ45 connection to the web browser) or by communicative means.

Additional information regarding the integrated web server can be found in the separate documentation.

"Peer to Peer" connection
http://169.254.1.1
The Notebook must be set to "DHCP".
Make sure that only one network connection is active.

Standard IP address:
http://192.168.0.10
Static IP address

Password (read-only):
User name: «guest»
Password: «guest»

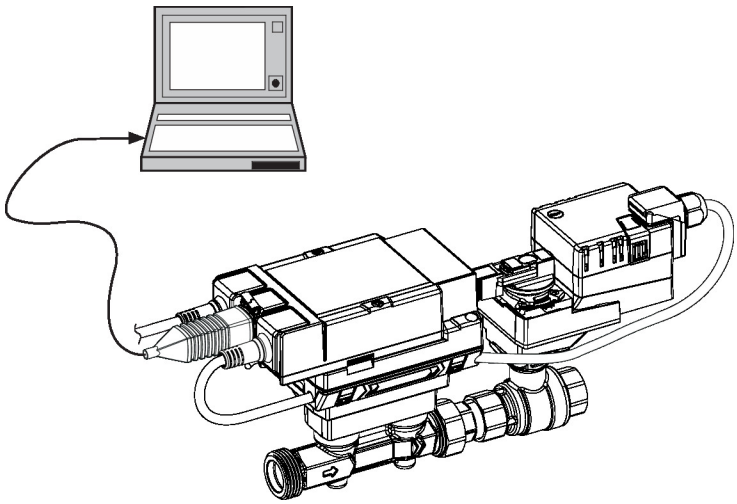

Control signal inversion

This can be inverted in cases of control with an analogue control signal DDC. The inversion causes the reversal of the standard behaviour, i.e. at a control signal DDC of 0%, regulation is to V'max or Q'max, and the valve is closed at a control signal DDC of 100%.

Hydronic balancing

Via the integrated web server, the maximum flow rate (equivalent to 100% requirement) can be adjusted on the device itself, simply and reliably, in a few steps. If the device is integrated in the management system, then the balancing can be handled directly by the management system.

Delta-T manager

If a heating or cooling coil is operated with a flow rate that is too high and thus with a differential temperature that is too low, this will not result in an increased power output.

Low differential temperatures result in heat generators or chillers providing energy at a lower efficiency. At the same time, too much water is circulated by the pumps, which unnecessarily increases energy consumption.

With the aid of the Energy Valve, it is easy to identify operation that deviates from the design case and to locate energy that is being used inefficiently.

The integrated delta T manager offers the user the possibility to define a delta T limit value. Falling below this value is automatically avoided by the Energy Valve by limiting the flow rate.

The delta T manager can be activated in the operating modes power control, flow control and position control. The delta T manager is not available in the differential pressure control operating mode.

Power output of the heating or cooling registers 1
Diff. temperature between supply and return 2
Loss zone (heating or cooling register saturation) 3
Adjustable minimum differential temperature 4

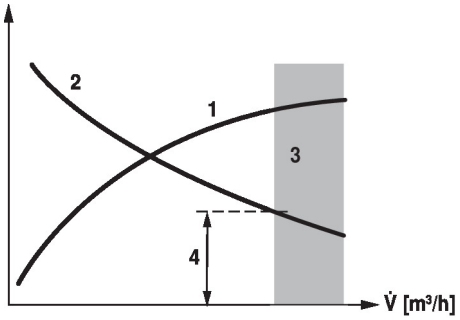

Combination analogue - communicative (hybrid mode)

With conventional control by means of an analogue control signal DDC, the integrated web server, BACnet, Modbus or MP-Bus can be used for the communicative position feedback.

Power and energy monitoring function

The HVAC performance device is equipped with two temperature sensors. A sensor (T2) is already installed at the thermal energy meter and the second sensor (T1) must be installed on-site on the other side of the water circuit. The two sensors are enclosed with the system already wired. The sensors are used to record the fluid temperature of the supply and return lines of the consumer (heating/cooling coil). As the water quantity is also known, thanks to the flow measurement integrated in the system, the power released from the consumer can be calculated. Furthermore, the heating/cooling energy is also determined automatically by means of the evaluation of the power over time.

The current data, e.g. temperatures, volumetric flow volumes, exchanger energy consumption etc. can be recorded and accessed at any time by means of web browsers or communication.

Data recording

The recorded data (integrated data recording for 13 months) can be used for the optimisation of the overall system and for the determination of the performance of the consumer (heating/cooling coil).

Download csv files through web browser.

Belimo Cloud

Additional services are available if the Energy Valve is connected to the Belimo Cloud: for instance, several devices may be managed via Internet. Also, Belimo experts may help analyse the delta-T behaviour or provide written reports about the Energy Valve performance. Under certain conditions, the product warranty according to the applicable Terms and Conditions of Sale may be prolonged. The "Terms of Use for Belimo Cloud Services" in their currently valid version apply to the use of Belimo Cloud services. Further details may be found under [www.belimo.com/ext-warranty]

Product features

Glycol monitoring
Glycol monitoring measures the actual glycol content, which is necessary for safe operation and optimised heat exchange.

Error readout with analogue position feedback
If the sensor cannot measure the flow due to a sensor error, this is indicated by 0.3 V at the position feedback U. This is only the case if the analogue position feedback U is set to flow and the lower value of the signal range is 0.5 V or more.

Manual override
Manual override with push-button possible (the gear train is disengaged for as long as the button is pressed or remains locked).

High functional safety
The actuator is overload protected, requires no limit switches and automatically stops when the end stop is reached.

Parts included

Description	Type
Grommet for RJ connection module with clamp	A-22PEM-A04
Thermowell Stainless steel, 50 mm, G 1/4", SW17	A-22PE-A07
Insulation shell for EPIV / Belimo Energy Valve™ DN 15...25	Z-INSH15
Insulation shell for EPIV / Belimo Energy Valve™ DN 32...50	Z-INSH32

Insulation shell not included in Asia Pacific

Accessories

Replacement sensor modules

Description	Type
Sensor module thermal energy meter DN 15	R-22PE-0UC
Sensor module thermal energy meter DN 20	R-22PE-0UD
Sensor module thermal energy meter DN 25	R-22PE-0UE
Sensor module thermal energy meter DN 32	R-22PE-0UF
Sensor module thermal energy meter DN 40	R-22PE-0UG
Sensor module thermal energy meter DN 50	R-22PE-0UH

Gateways

Description	Type
Converter M-Bus	G-22PEM-A01

Mechanical accessories

Description	Type
T-piece with thermowell DN 15	A-22PE-A01
T-piece with thermowell DN 20	A-22PE-A02
T-piece with thermowell DN 25	A-22PE-A03
T-piece with thermowell DN 32	A-22PE-A04
T-piece with thermowell DN 40	A-22PE-A05
T-piece with thermowell DN 50	A-22PE-A06
Thermowell Stainless steel, 80 mm, G 1/2", SW27	A-22PE-A08
Pipe connector DN 15 Rp 1/2", G 3/4"	EXT-EF-15F
Pipe connector DN 20 Rp 3/4", G 1"	EXT-EF-20F
Pipe connector DN 25 Rp 1", G 1 1/4"	EXT-EF-25F
Pipe connector DN 32 Rp 1 1/4", G 1 1/2"	EXT-EF-32F
Pipe connector DN 40 Rp 1 1/2", G 2"	EXT-EF-40F
Pipe connector DN 50 Rp 2", G 2 1/2"	EXT-EF-50F
Valve neck extension for ball valve DN 15...50	ZR-EXT-01
Pipe connector for ball valve with internal thread DN 15 Rp 1/2"	ZR2315
Pipe connector for ball valve with internal thread DN 20 Rp 3/4"	ZR2320
Pipe connector for ball valve with internal thread DN 25 Rp 1"	ZR2325
Pipe connector for ball valve with internal thread DN 32 Rp 1 1/4"	ZR2332
Pipe connector for ball valve with internal thread DN 40 Rp 1 1/2"	ZR2340
Pipe connector for ball valve with internal thread DN 50 Rp 2"	ZR2350

Tools

Description	Type
Belimo Assistant App, Smartphone app for easy commissioning, parametrising and maintenance	Belimo Assistant App

Accessories

Description	Type
Converter Bluetooth / NFC	ZIP-BT-NFC

Electrical installation

Supply from isolating transformer.

Parallel connection of other actuators possible. Observe the performance data.

The wiring of the line for BACnet MS/TP / Modbus RTU is to be carried out in accordance with applicable RS-485 regulations.

Modbus / BACnet: Supply and communication are not galvanically isolated. Connect earth signal of the devices with one another.

Sensor connection: An additional sensor can optionally be connected to the thermal energy meter. This can be a passive resistance sensor Pt1000, Ni1000, NTC10k (10k2), an active sensor with output DC 0...10 V or a switching contact. Thus the analogue signal of the sensor can be easily digitised with the thermal energy meter and transferred to the corresponding bus system.

Analogue output: An analogue output (wire 5) is available on the thermal energy meter. It can be selected as DC 0...10 V, DC 0.5...10 V or DC 2...10 V. For example, the flow rate or the temperature of the temperature sensor T1/T2 can be output as an analogue value.

Wire colours:
1 = black
2 = red
3 = white
5 = orange
6 = pink
7 = grey

Functions:
C1 = D- = A (wire 6)
C2 = D+ = B (wire 7)

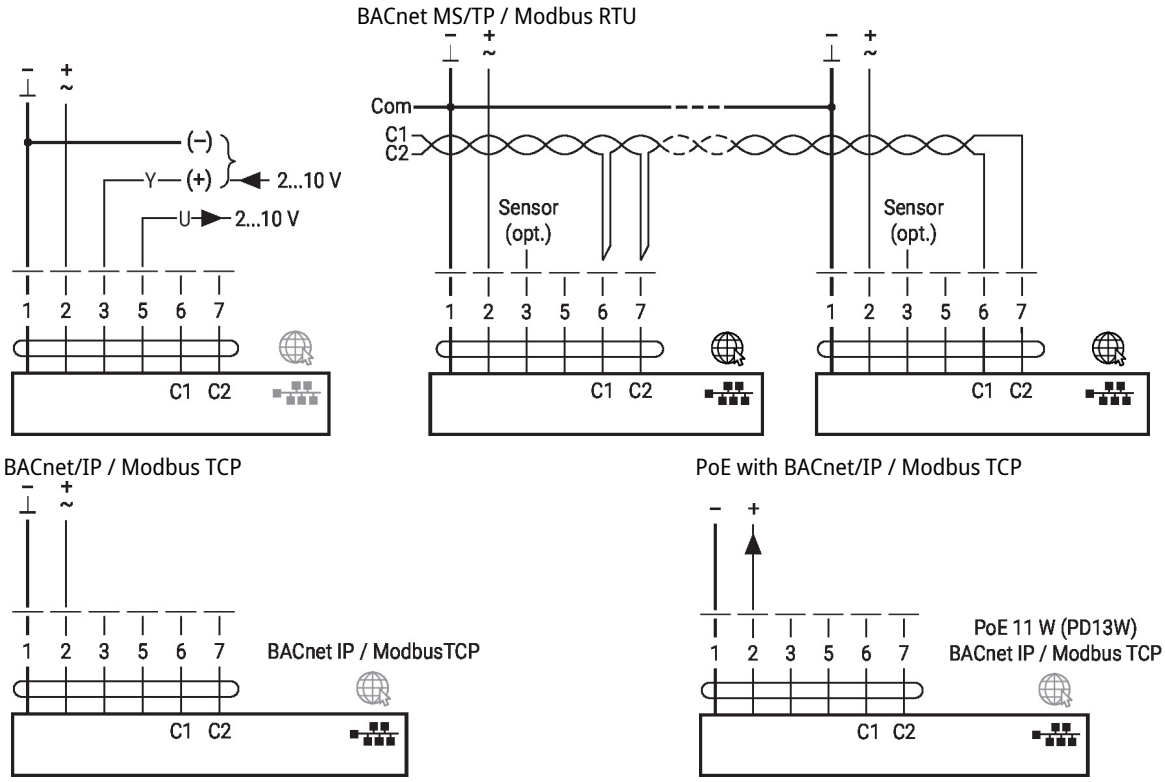

Electrical installation

Connection of a notebook for parametrisation and manual control via RJ45.

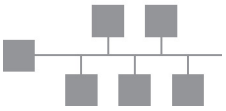

Optional connection via RJ45 (direct connection to notebook / connection via Intranet or Internet) for access to the integrated web server

Connection with passive sensor

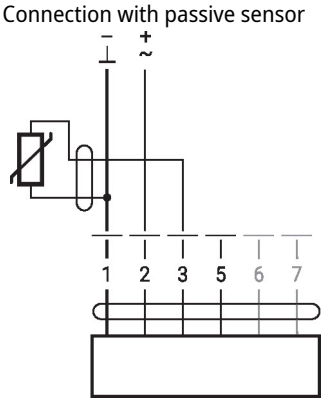

Connection with switching contact

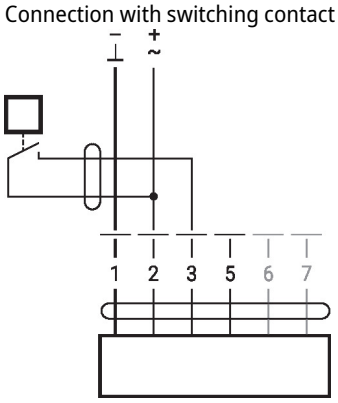

Connection with active sensor

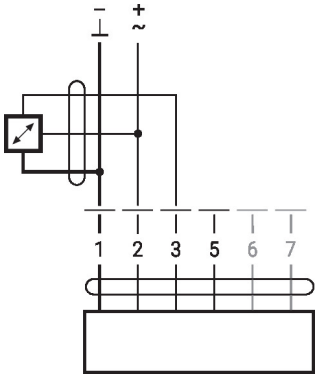

Functions

Functions with specific parameters (parametrisation necessary)

Override control and limiting with AC 24 V with relay contacts

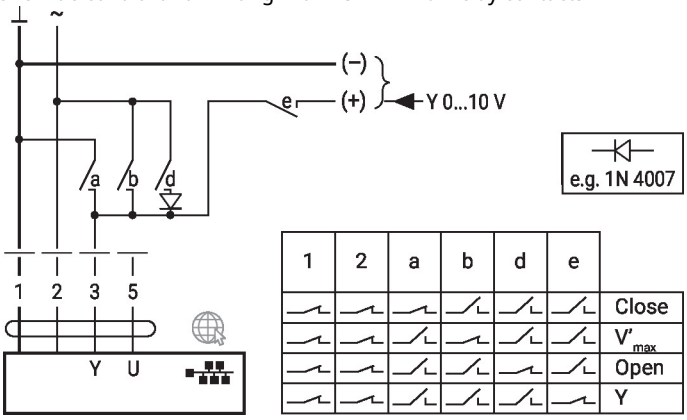

1	2	a	b	d	e	
						Close
						V'_{max}
						Open
						Y

Functions with specific parameters (parametrisation necessary)

Override control and limiting with DC 24 V with relay contacts (with conventional control or hybrid mode)

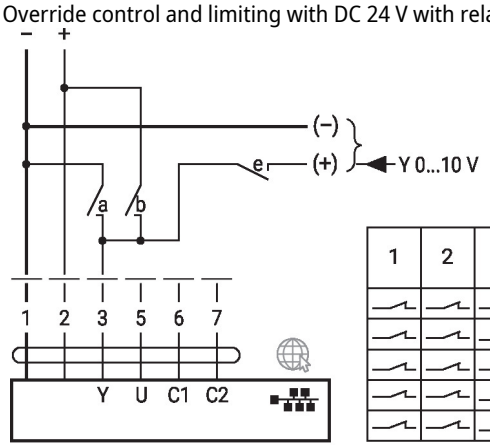

1	2	a	b	e	
					Close
					Y
					Open[1]
					V'_{max} [2]
					Q'_{max} [3]

1) Position control
2) Flow control
3) Power control

BACnet MS/TP / Modbus RTU with analogue setpoint (hybrid mode)

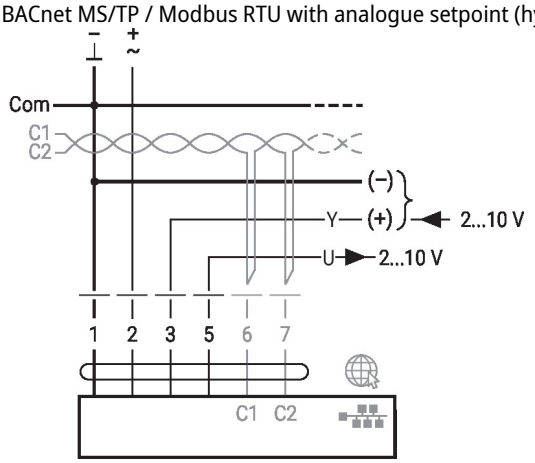

BACnet/IP / Modbus TCP with analogue setpoint (hybrid mode)

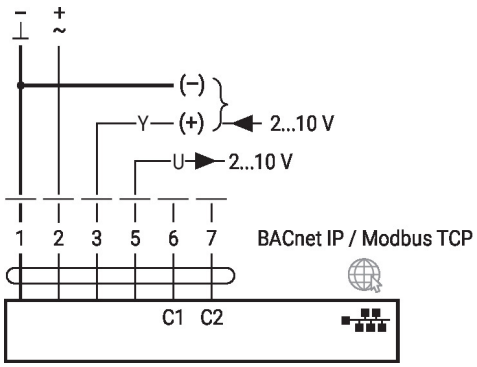

MP-Bus, supply via 3-wire connection

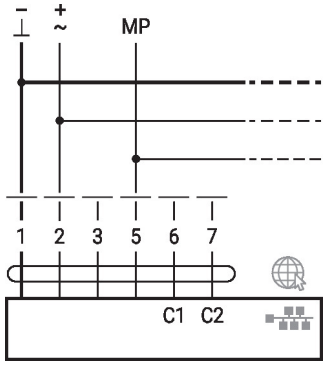

MP-Bus via 2-wire connection, local power supply

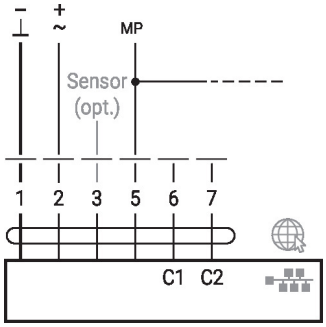

MP-Bus with analogue setpoint (hybrid mode)

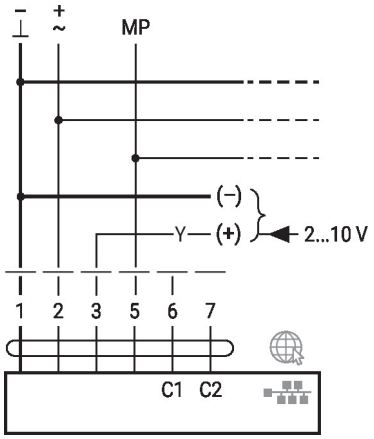

Functions

Functions with specific parameters (parametrisation necessary)

M-Bus with converter

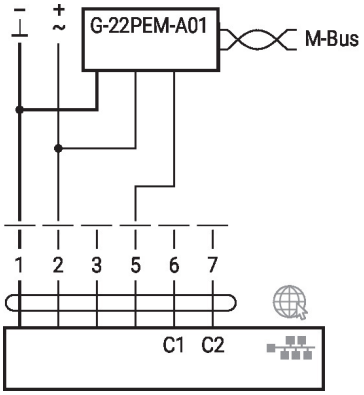

M-Bus parallel Modbus TCP or BACnet/IP with PoE

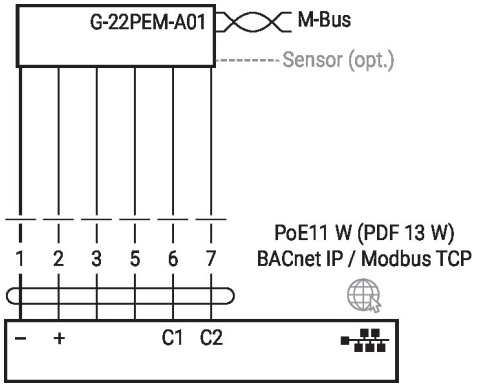

M-Bus via Converter M-Bus

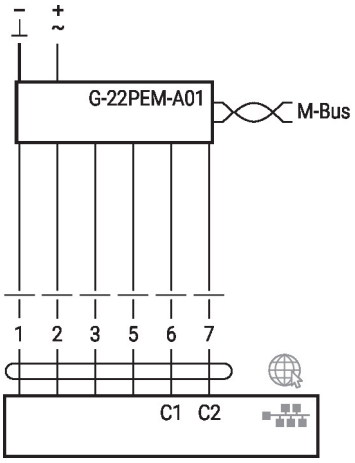

M-Bus parallel Modbus RTU or BACnet MS/TP

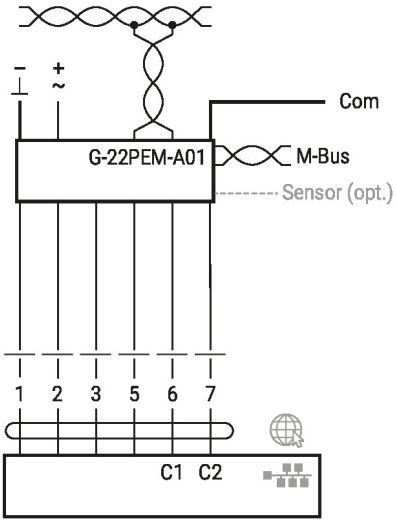

M-Bus parallel Modbus TCP or BACnet/IP

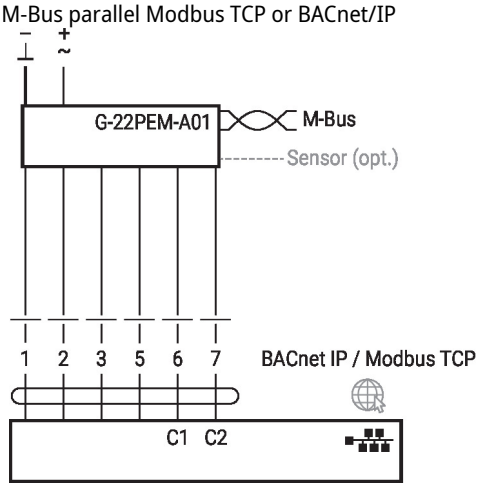

Operating controls and indicators

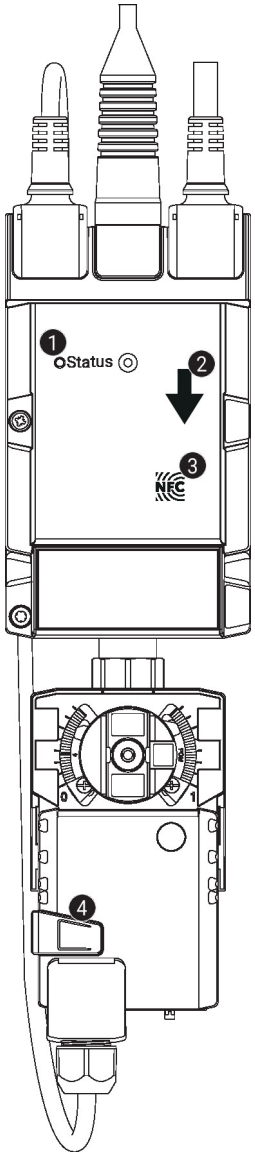

1 LED display green

On:	Device starting up
Flashing:	In operation (Power ok)
Off:	No power

2 Flow direction

3 NFC interface

4 Manual override button

Press button:	Gear train disengages, motor stops, manual override possible
Release button:	Gear train engages, standard mode. Device performs synchronisation

Installation notes

Permissible installation orientation

The ball valve can be installed upright to horizontal. The ball valve may not be installed in a hanging position, i.e. with the spindle pointing downwards.

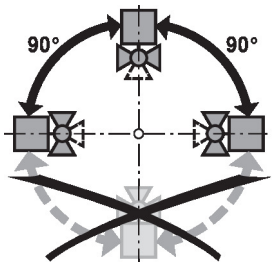

Installation location in return

Installation in the return is recommended.

Water quality requirements

The water quality requirements specified in VDI 2035 must be adhered to.

Belimo valves are regulating devices. For the valves to function correctly in the long term, they must be kept free from particle debris (e.g. welding beads during installation work). The installation of a suitable strainer is recommended.

Servicing

Ball valves, rotary actuators and sensors are maintenance-free.

Before any service work on the control element is carried out, it is essential to isolate the rotary actuator from the power supply (by unplugging the electrical cable if necessary). Any pumps in the part of the piping system concerned must also be switched off and the appropriate slide valves closed (allow all components to cool down first if necessary and always reduce the system pressure to ambient pressure level).

The system must not be returned to service until the ball valve and the rotary actuator have been correctly reassembled in accordance with the instructions and the pipeline has been refilled by professionally trained personnel.

Flow direction

The direction of flow, specified by an arrow on the housing, is to be complied with, since otherwise the flow rate will be measured incorrectly.

Cleaning of pipes

Before installing the thermal energy meter, the circuit must be thoroughly rinsed to remove impurities.

Prevention of stresses

The thermal energy meter must not be subjected to excessive stress caused by pipes or fittings.

Inlet section

In order to achieve the specified measuring accuracy, a flow-calming section or inflow section in the direction of the flow is to be provided upstream from the flow sensor. Its dimensions should be at least 5x DN.

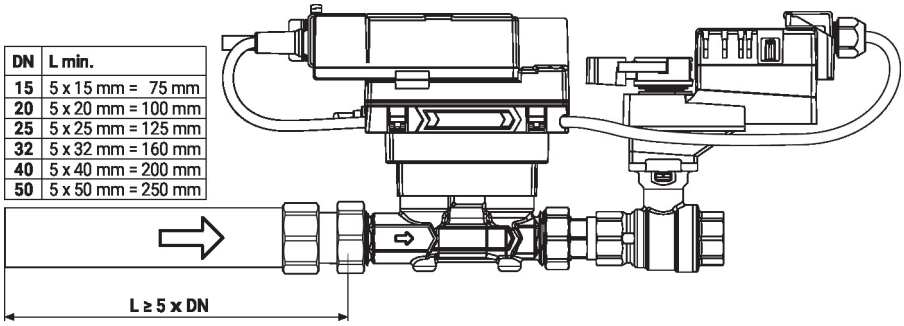

DN	L min.
15	5 x 15 mm = 75 mm
20	5 x 20 mm = 100 mm
25	5 x 25 mm = 125 mm
32	5 x 32 mm = 160 mm
40	5 x 40 mm = 200 mm
50	5 x 50 mm = 250 mm

Installation notes

Mounting of immersion sleeve and temperature sensor

The valve is equipped with two fully-wired temperature sensors.

• T2: This sensor is installed in the thermal energy meter.

• T1: This sensor is installed on site ahead of the consumer (valve in the return line) or after the consumer (valve in the supply line).

Note

The cables between valve unit and temperature sensors may not be either shortened or lengthened.

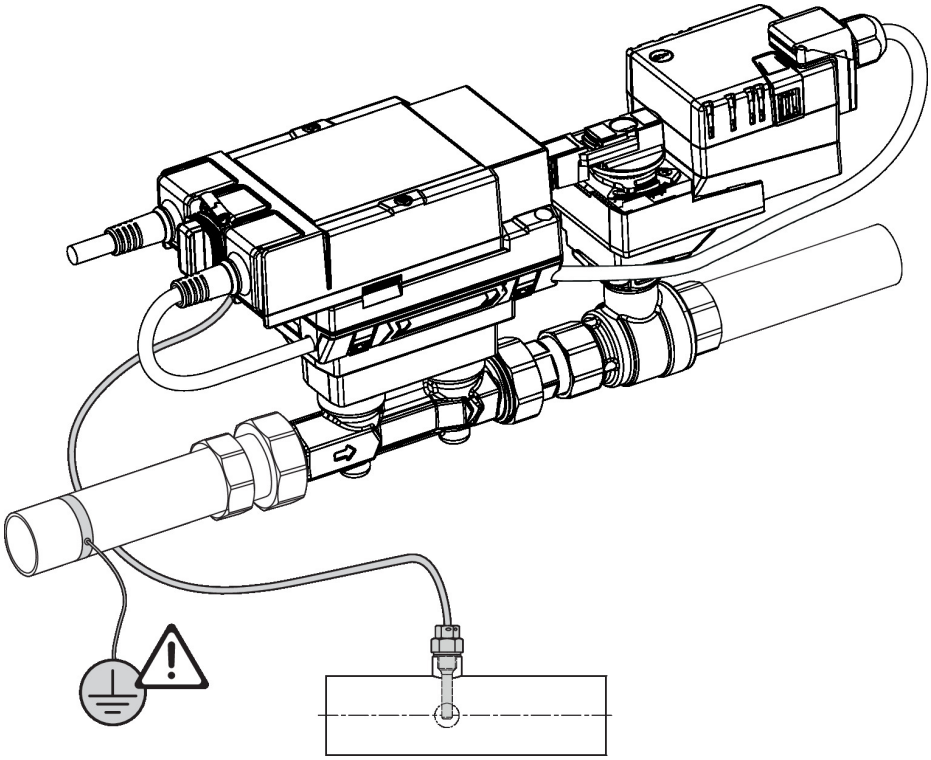

Split installation

The valve-actuator combination may be mounted separately from the flow sensor. The direction of flow of both components must be observed.

General notes

Minimum differential pressure (pressure drop)

The minimum required differential pressure (pressure drop through the valve) for achieving the desired volumetric flow V'max can be calculated with the aid of the theoretical kvs value (see type overview) and the below-mentioned formula. The calculated value is dependent on the required maximum volumetric flow V'max. Higher differential pressures are compensated for automatically by the valve.

Formula

$$\Delta p_{min} = 100 \times \left(\frac{\dot{V}_{max}}{k_{vs\ theor.}}\right)^2$$

Δp_{min}: kPa
$\dot{V}_{max}$: m^3/h
$k_{vs\ theor.}$: m^3/h

Example (DN 25 with the desired maximum flow rate = 50% V'nom)

EV025R2+BAC
kvs theor. = 8.8 m^3/h
V'nom = 58.3 l/min
50% * 58.3 l/min = 29.2 l/min = 1.75 m^3/h

$$\Delta p_{min} = 100 \times \left(\frac{V'_{max}}{k_{vs\ theor.}}\right)^2 = 100 \times \left(\frac{1.75\ m^3/h}{8.8\ m^3/h}\right)^2 = 4\ kPa$$

General notes

Behaviour in case of sensor failure

In case of a flow sensor error, the Energy Valve will switch from either power or flow control to position control (Delta-T manger will be deactivated).

Once the error disappears, the Energy Valve will switch back to the normal control setting (Delta-T manager activated)

Dimensions

Dimensional drawings

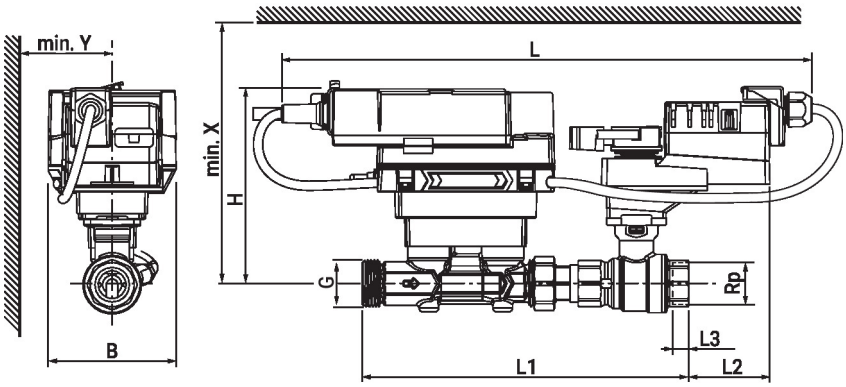

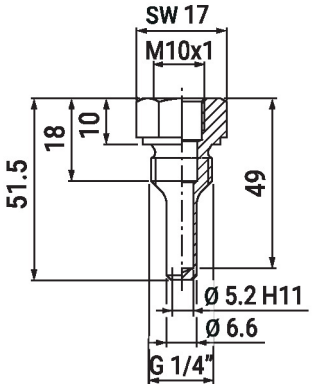

Type	DN	Rp [“]	G [“]	L [mm]	L1 [mm]	L2 [mm]	L3 [mm]	B [mm]	H [mm]	X [mm]	Y [mm]	kg
EV015R2+BAC	15	1/2	3/4	362	195	62	13	90	136	206	80	2.2
EV020R2+BAC	20	3/4	1	374	230	57	14	90	137	207	80	2.4
EV025R2+BAC	25	1	1 1/4	381	246	51	16	90	140	210	80	2.8
EV032R2+BAC	32	1 1/4	1 1/2	398	267	50	19	90	143	213	80	3.5
EV040R2+BAC	40	1 1/2	2	404	280	45	19	90	147	217	80	4.2
EV050R2+BAC	50	2	2 1/2	421	294	49	22	90	152	222	80	5.1

Further documentation

- Data sheet thermal energy meter
- Overview MP Cooperation Partners
- Tool connections
- General notes for project planning
- Instruction Webserver
- Description Data-Pool Values
- BACnet Interface description
- Modbus Interface description
- Introduction to MP-Bus Technology
- Installation instructions for actuators and/or ball valves
- Differential pressure control with the Belimo Energy Valve™