Rotary actuator fail-safe and extended functionalities in the IP66/67 protective housing for adjusting dampers in technical building installations

- Air damper size up to approx. 8 m²
- Torque motor 40 Nm
- Nominal voltage AC/DC 24 V
- Control Open/close
- Optimum weather protection for use outdoors (for use in ambient temperatures up to –40°C, there is a separate actuator available with built-in heater)

Technical data

Electrical data	Nominal voltage	AC/DC 24 V
	Nominal voltage frequency	50/60 Hz
	Nominal voltage range	AC 19.2...28.8 V / DC 21.6...28.8 V
	Power consumption in operation	11 W
	Power consumption in rest position	3 W
	Power consumption for wire sizing	21 VA
	Connection supply / control	Cable 1 m, 3x 0.75 mm² (halogen-free)
	Parallel operation	Yes (note the performance data)
Functional data	Torque motor	40 Nm
	Setting fail-safe position	0...100%, adjustable in increments of 10% (POP rotary knob on 0 corresponds to left end stop)
	Bridging time (PF)	2 s
	Direction of motion motor	selectable with switch 0 (ccw rotation) / 1 (cw rotation)
	Direction of motion fail-safe	selectable with switch 0...100%
	Manual override	with push-button (under protective housing)
	Angle of rotation	Max. 95°
	Angle of rotation note	can be limited on both sides with adjustable mechanical end stops
	Running time motor	150 s / 90°
	Running time fail-safe	35 s / 90°
	Sound power level, motor	52 dB(A)
	Sound power level, fail-safe	61 dB(A)
	Mechanical interface	Universal shaft clamp 14...26.7 mm
	Position indication	Mechanical
Safety data	Protection class IEC/EN	III, Safety Extra-Low Voltage (SELV)
	Power source UL	Class 2 Supply
	Degree of protection IEC/EN	IP66/67
	Degree of protection NEMA/UL	NEMA 4X
	Enclosure	UL Enclosure Type 4X
	EMC	CE according to 2014/30/EU
	Certification IEC/EN	IEC/EN 60730-1 and IEC/EN 60730-2-14

Technical data

Safety data	UL Approval	cULus according to UL60730-1A, UL60730-2-14 and CAN/CSA E60730-1 The UL marking on the actuator depends on the production site, the device is UL-compliant in any case
	Type of action	Type 1.AA
	Rated impulse voltage supply / control	0.8 kV
	Pollution degree	4
	Ambient humidity	Max. 100% RH
	Ambient temperature	-30...50°C [-22...122°F]
	Ambient temperature note	-40...50°C [104...122°F] for actuator with integrated heating
	Storage temperature	-40...80°C [-40...176°F]
	Servicing	maintenance-free
Weight	Weight	3.7 kg
Terms	Abbreviations	POP = Power off position / fail-safe position PF = Power fail delay time / bridging time

Safety notes

- This device has been designed for use in stationary heating, ventilation and air-conditioning systems and must not be used outside the specified field of application, especially in aircraft or in any other airborne means of transport.
- Only authorised specialists may carry out installation. All applicable legal or institutional installation regulations must be complied with during installation.
- Junction boxes must at least correspond with enclosure IP degree of protection!
- The cover of the protective housing may be opened for adjustment and servicing. When it is closed afterwards, the housing must seal tight (see installation instructions).
- The device may only be opened at the manufacturer's site. It does not contain any parts that can be replaced or repaired by the user.
- The cables must not be removed from the device installed in the interior.
- To calculate the torque required, the specifications supplied by the damper manufacturers concerning the cross-section and the design, as well as the installation situation and the ventilation conditions must be observed.
- The device contains electrical and electronic components and must not be disposed of as household refuse. All locally valid regulations and requirements must be observed.
- The device is not designed for applications where chemical influences (gases, fluids) are present or for utilisation in corrosive environments in general.
- The actuator may not be used in plenary applications (e.g. suspended ceilings or raised floors).
- The materials used may be subject to external influences (temperature, pressure, construction fastening, effect of chemical substances, etc.), which cannot be simulated in laboratory tests or field trials. In case of doubt, we definitely recommend that you carry out a test. This information does not imply any legal entitlement. Belimo will not be held liable and will provide no warranty.
- Flexible metallic cable conduits or threaded cable conduits of equal value are to be used for UL (NEMA) Type 4X applications.
- When used under high UV loads, e.g. extreme sunlight, the use of flexible metallic or equivalent cable conduits is recommended.

Product features

Fields of application

The actuator is particularly suitable for utilisation in outdoor applications and is protected against the following weather conditions:
- UV radiation
- Rain / Snow
- Dirt / Dust
- Air humidity
- Alternating climate / frequent and severe temperature fluctuations (Recommendation: use the actuator with integrated factory-installed heating which can be ordered separately to prevent internal condensation)

Operating mode

The actuator moves the damper to the desired operating position at the same time as the integrated capacitors are charged. Interrupting the supply voltage causes the damper to be rotated back into the fail-safe position by means of stored electrical energy.

Pre-charging time (start up)

The capacitor actuators require a pre-charging time. This time is used for charging the capacitors up to a usable voltage level. This ensures that, in the event of a power failure, the actuator can move at any time from its current position into the preset fail-safe position. The duration of the pre-charging time depends mainly on how long the power was interrupted.

Typical pre-charging time

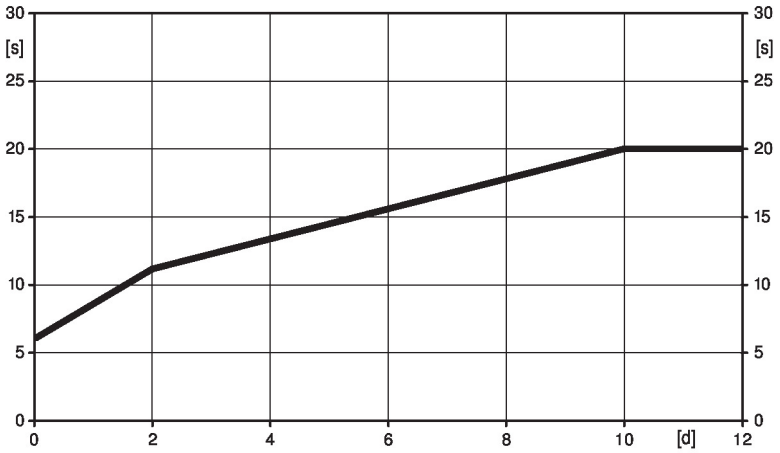

[d] = Power failure in days
[s] = Pre-charging time in seconds

	[d]				
	0	1	2	7	≥10
[s]	6	9	11	16	20

Delivery condition (capacitors)

The actuator is completely discharged after delivery from the factory, which is why the actuator requires approximately 20 s pre-charging time before initial commissioning in order to bring the capacitors up to the required voltage level.

Setting fail-safe position (POP)

The rotary knob fail-safe position can be used to adjust the desired fail-safe position. The setting range is always in reference to the maximum angle of rotation of the actuator.

The rotary knob always refers to an angle-of-rotation range of 95° and does not take into account any retroactively adjusted end stops.

In the event of a power failure, the actuator will move to the selected fail-safe position, taking into account the bridging time (PF) of 2 s set at the factory.

Simple direct mounting

Simple direct mounting on the damper shaft with a universal shaft clamp, supplied with an anti-rotation device to prevent the actuator from rotating.

Manual override

Manual control with push-button possible - temporary. The gear train is disengaged and the actuator decoupled for as long as the button is pressed.

The housing cover must be removed for manual override.

Product features

High functional reliability The actuator is overload protected, requires no limit switches and automatically stops when the end stop is reached.

Home position The shaft clamp of the actuator is set by default to 0°. After the supply voltage has been applied, the actuator moves into the position defined by the control signal.

Setting direction of motion When actuated, the direction of the rotation switch changes the running direction in normal operation. The direction of the rotation switch has no influence on the fail-safe position which has been set.

Accessories

Electrical accessories

Description	Type
Auxiliary switch 2x SPDT add-on, grey	S2A GR
Feedback potentiometer 140 Ω add-on	P140A
Feedback potentiometer 1 kΩ add-on	P1000A
Feedback potentiometer 10 kΩ add-on	P10000A
Adapter for auxiliary switch and feedback potentiometer, Multipack 20 pcs.	Z-SPA

Mechanical accessories

Description	Type
Cable gland for cable diameter ø4...10 mm	Z-KB-PG11

Options ex works only

Description	Type
Heater, with adjustable thermostat	HT24-MG
Heater, with mechanical humidistat	HH24-MG

Electrical installation

Supply from isolating transformer.

Parallel connection of other actuators possible. Observe the performance data.

Wire colours:
1 = black
2 = red
3 = white

AC/DC 24 V, open/close

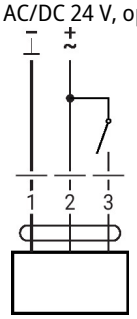

Auxiliary switch

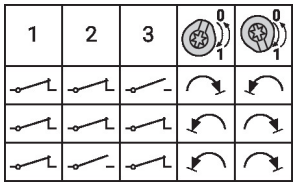

Operating controls and indicators

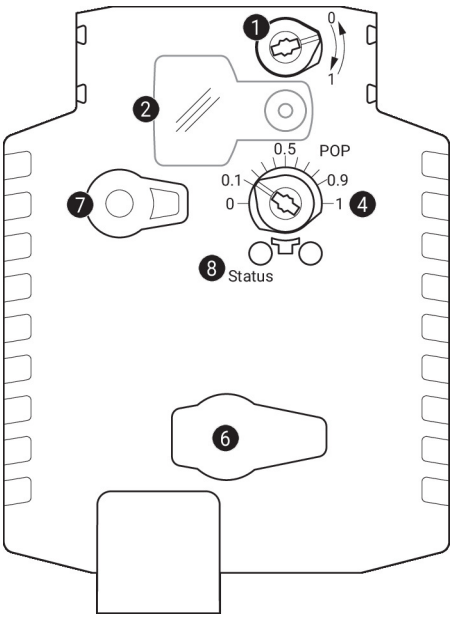

1 **Direction of rotation switch**

Switch over: Direction of rotation changes

2 **Cover, POP button**

3 **POP button**

4 **Scale for manual adjustment**

6 (no function)

7 **Manual override button**

Press button: Gear train disengages, motor stops, manual override possible

Release button: Gear train engages, standard mode

LED displays

green 8	Meaning / function
On	Operation OK
Flashing	POP function active
Off	- Not in operation - Pre-charging time SuperCap - Fault SuperCap

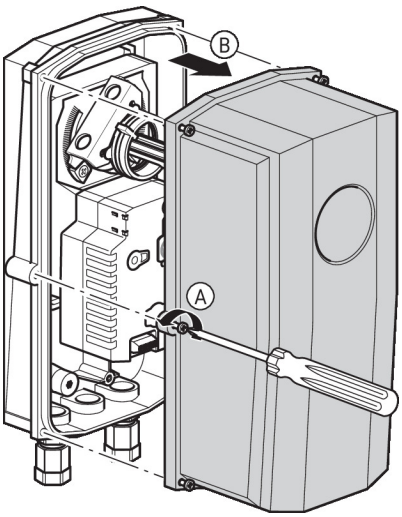

Operating controls and indicators

Setting fail-safe position (POP)

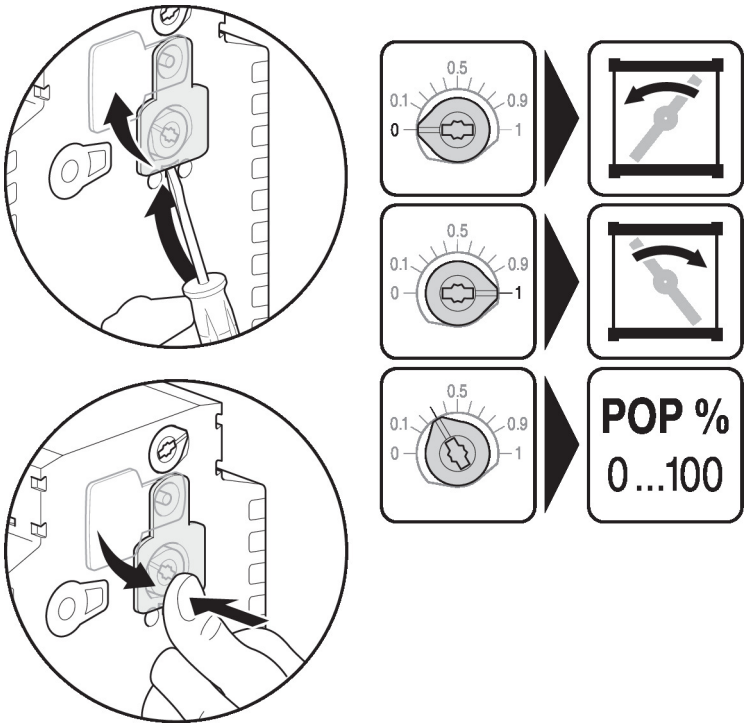

Dimensions

Spindle length

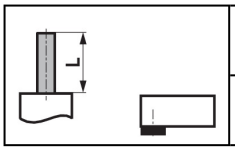	-
	16...75
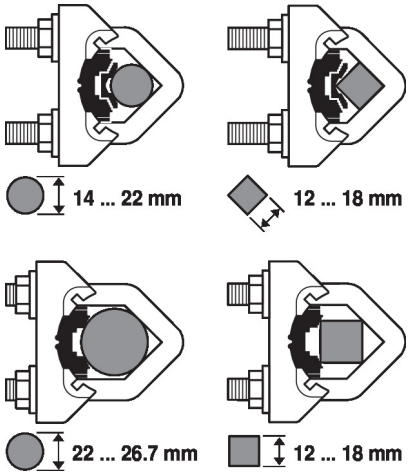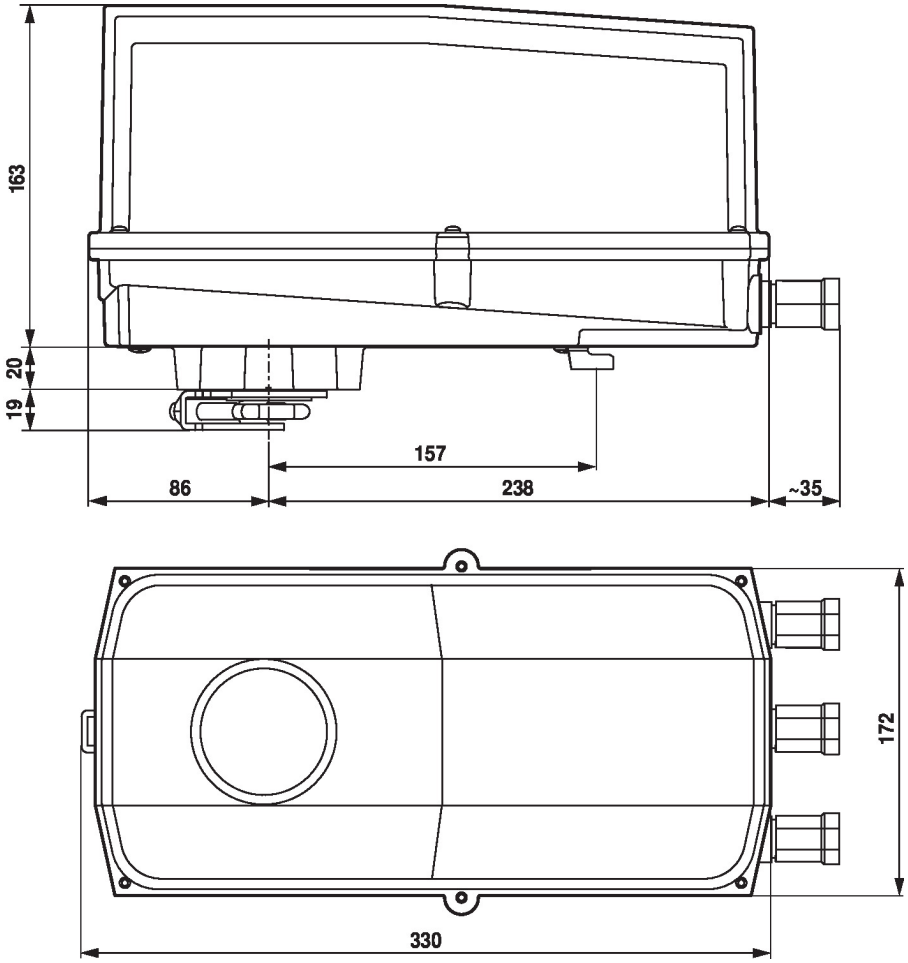
Clamping range damper shaft