Modulating rotary actuator fail-safe and extended functionalities for adjusting dampers in technical building installations

- Air damper size up to approx. 1.2 m²
- Torque motor 6 Nm
- Nominal voltage AC/DC 24 V
- Control modulating 0.5...10 V
- Position feedback 0.5...10 V
- Running time motor 4 s

Picture may differ from product

Technical data

Electrical data	Nominal voltage	AC/DC 24 V
	Nominal voltage frequency	50/60 Hz
	Nominal voltage range	AC 19.2...28.8 V / DC 21.6...28.8 V
	Power consumption in operation	11 W
	Power consumption in rest position	3 W
	Power consumption for wire sizing	22 VA
	Inrush current (Imax)	20.0 A @ 5 ms
	Connection supply / control	Cable 1 m, 4x 0.75 mm²
	Parallel operation	Yes (note the performance data)
Functional data	Torque motor	6 Nm
	Operating range Y	0.5...10 V
	Input impedance	100 kΩ
	Position feedback U	0.5...10 V
	Position feedback U note	Max. 0.5 mA
	Setting fail-safe position	0...100%, adjustable in increments of 10% (POP rotary knob on 0 corresponds to left end stop)
	Bridging time (PF)	0 s
	Position accuracy	±5%
	Direction of motion motor	selectable with switch 0/1
	Direction of motion fail-safe	selectable with switch 0...100%
	Direction of motion note	Y = 0 V: At switch position 0 (ccw rotation) / 1 (cw rotation)
	Manual override	with push-button
	Angle of rotation	Max. 95°
	Angle of rotation note	can be limited on both sides with adjustable mechanical end stops
	Minimum angle of rotation	Min. 30°
	Running time motor	4 s / 90°
	Running time fail-safe	4 s / 90°
	Sound power level, motor	60 dB(A)
	Sound power level, fail-safe	60 dB(A)
	Adaptation setting range	manual (automatic on first power-up)
	Mechanical interface	Universal shaft clamp 8...26.7 mm
	Position indication	Mechanical, pluggable
Safety data	Protection class IEC/EN	III, Safety Extra-Low Voltage (SELV)
	Power source UL	Class 2 Supply
	Degree of protection IEC/EN	IP54
	Degree of protection NEMA/UL	NEMA 2

Technical data

Safety data	Housing	UL Enclosure Type 2
	EMC	CE according to 2014/30/EU
	Certification IEC/EN	IEC/EN 60730-1 and IEC/EN 60730-2-14
	UL Approval	cULus according to UL60730-1A, UL60730-2-14 and CAN/CSA E60730-1 The UL marking on the actuator depends on the production site, the device is UL-compliant in any case
	Type of action	Type 1.AA
	Rated impulse voltage supply / control	0.8 kV
	Pollution degree	3
	Ambient humidity	Max. 95% RH, non-condensing
	Ambient temperature	-30...50°C [-22...122°F]
	Storage temperature	-40...80°C [-40...176°F]
	Servicing	maintenance-free
Weight	Weight	1.1 kg
Terms	Abbreviations	POP = Power off position / fail-safe position PF = Power fail delay time / bridging time

Safety notes

- This device has been designed for use in stationary heating, ventilation and air-conditioning systems and must not be used outside the specified field of application, especially in aircraft or in any other airborne means of transport.
- Outdoor application: Only possible if no (sea) water, snow, ice, sunlight or aggressive gases act directly on the device and if it is ensured that the ambient conditions remain within the limit values specified in the data sheet at all times.
- Only authorised specialists may carry out installation. All applicable legal or institutional installation regulations must be complied with during installation.
- The device may only be opened at the manufacturer's site. It does not contain any parts that can be replaced or repaired by the user.
- Cables must not be removed from the device.
- To calculate the torque required, the specifications supplied by the damper manufacturers concerning the cross-section and the design, as well as the installation situation and the ventilation conditions must be observed.
- Self adaptation is necessary when the system is commissioned and after each adjustment of the angle of rotation (press the adaptation push-button once).
- The device contains electrical and electronic components and must not be disposed of as household refuse. All locally valid regulations and requirements must be observed.

Product features

Operating mode

The actuator moves the damper to the desired operating position at the same time as the integrated capacitors are charged. Interrupting the supply voltage causes the damper to be rotated back into the fail-safe position by means of stored electrical energy.

The actuator is connected with an analogue control signal Y (note the operating range) and drives to the position defined. The measuring voltage U serves for the electrical display of the damper position 0...100% and as control signal for other actuators.

Product features

Pre-charging time (start up)

The capacitor actuators require a pre-charging time. This time is used for charging the capacitors up to a usable voltage level. This ensures that, in the event of a power failure, the actuator can move at any time from its current position into the preset fail-safe position.

The duration of the pre-charging time depends mainly on following factors:

– Duration of the power failure

– PF delay time (bridging time)

Typical pre-charging times

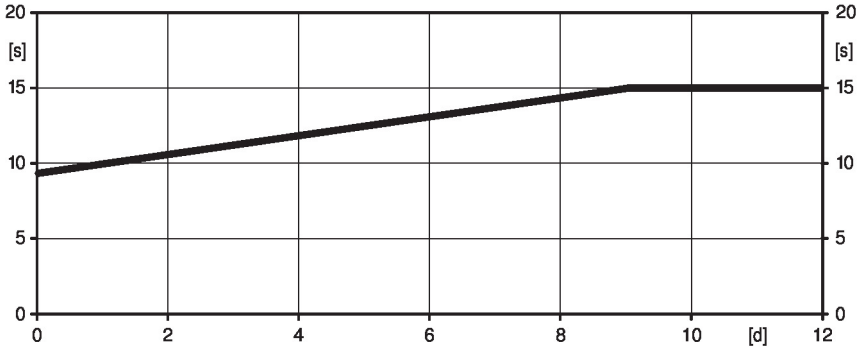

[d] = Power failure in days
[s] = Pre-charging time in seconds
PF[s] = Bridging time

	[d]				
	0	1	2	7	≥10
[s]	9	10	11	13	15

Delivery condition (capacitors)

The actuator is completely discharged after delivery from the factory, which is why the actuator requires approximately 15 s pre-charging time before initial commissioning in order to bring the capacitors up to the required voltage level.

Setting fail-safe position (POP)

The rotary knob fail-safe position can be used to adjust the desired fail-safe position 0...100% in 10% increments.

The rotary knob refers only to the adapted angle of rotation range 30°...95°. No set min. or max. values are observed.

In the event of a power failure, the actuator will move into the selected fail-safe position, taking into account the bridging time that has been set.

Simple direct mounting

Simple direct mounting on the damper shaft with a universal shaft clamp, supplied with an anti-rotation mechanism to prevent the actuator from rotating.

Manual override

Manual control with push-button possible - temporary. The gear train is disengaged and the actuator decoupled for as long as the button is pressed.

Adjustable angle of rotation

Adjustable angle of rotation with mechanical end stops. A minimum permissible angle of rotation of 30° must be allowed for.

High functional reliability

The actuator is overload protected, requires no limit switches and automatically stops when the end stop is reached.

Home position

The first time the supply voltage is switched on, i.e. at the time of commissioning, the actuator carries out an adaptation, which is when the operating range and position feedback adjust themselves to the mechanical setting range.

The detection of the mechanical end stops enables a gentle approach to the end positions, thus protecting the actuator mechanics.

The actuator then moves into the position defined by the control signal.

Adaptation and synchronisation

An adaptation can be triggered manually by pressing the "Adaptation" button. Both mechanical end stops are detected during the adaptation (entire setting range).

Setting direction of motion

When actuated, the direction of the rotation switch changes the running direction in normal operation. The direction of the rotation switch has no influence on the fail-safe position which has been set.

Accessories

Electrical accessories	Description	Type
	Auxiliary switch 1x SPDT add-on	S1A
	Auxiliary switch 2x SPDT add-on	S2A
	Feedback potentiometer 140 Ω add-on	P140A
	Feedback potentiometer 1 kΩ add-on	P1000A
	Feedback potentiometer 10 kΩ add-on	P10000A
	Adapter for auxiliary switch and feedback potentiometer, Multipack 20 pcs.	Z-SPA
	Signal converter voltage/current 100 kΩ 4...20 mA, Supply AC/DC 24 V	Z-UIC
	Positioner for wall mounting	SGA24
	Positioner for built-in mounting	SGE24
	Positioner for front-panel mounting	SGF24
	Positioner for wall mounting	CRP24-B1

Mechanical accessories	Description	Type
	Actuator arm for standard shaft clamp (one-sided)	AH-25
	Shaft extension 240 mm ø20 mm for damper shaft ø8...22.7 mm	AV8-25
	Mounting kit for linkage operation for flat installation	ZG-NMA

* Adapter Z-SPA

It is imperative that this adapter will be ordered if an auxiliary switch or a feedback potentiometer is required.

Electrical installation

Supply from isolating transformer.

Parallel connection of other actuators possible. Observe the performance data.

AC/DC 24 V, modulating

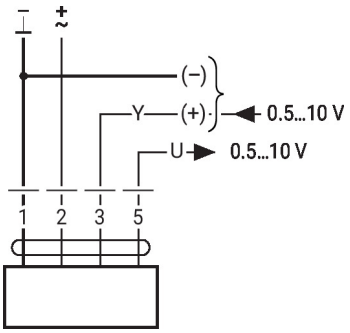

1	2	3		
		0.5 V		
		10 V		

Parallel operation

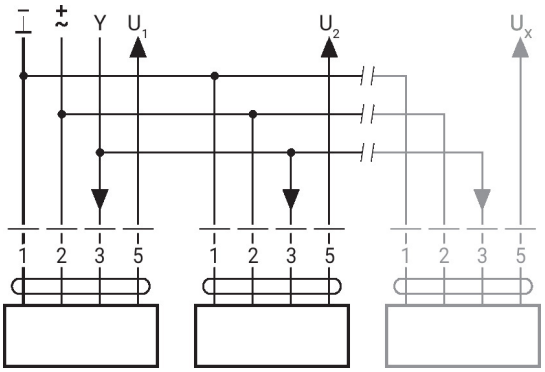

- Max. 8 actuators in parallel
- Parallel operation is permitted only on non-connected axes
- Do not fail to observe performance data with parallel operation

Operating controls and indicators

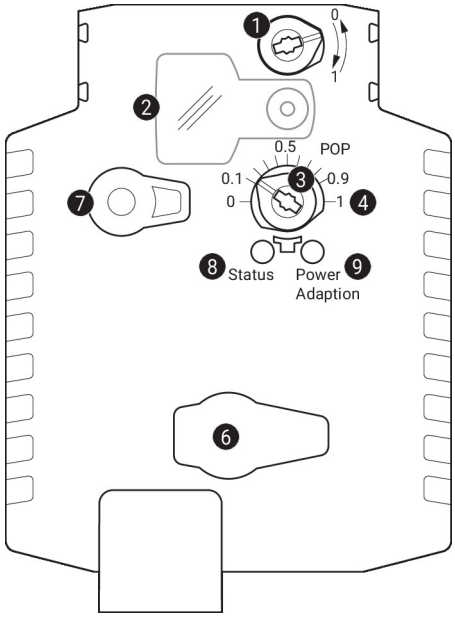

1 Direction of rotation switch

Switch over: Direction of rotation changes

2 Cover, POP button

3 POP button

4 Scale for manual adjustment

6 (no function)

7 Manual override button

Press button: Gear train disengages, motor stops, manual override possible

Release button: Gear train engages, standard mode

9 Push-button (LED green)

Press button: Triggers angle of rotation adaptation, followed by standard mode

LED displays

yellow 8	green 9	Meaning / function
Off	On	Operation OK
Off	Flashing	POP function active
On	Off	Fault
Off	Off	Not in operation
On	On	Adaptation process active

Setting fail-safe position (POP)

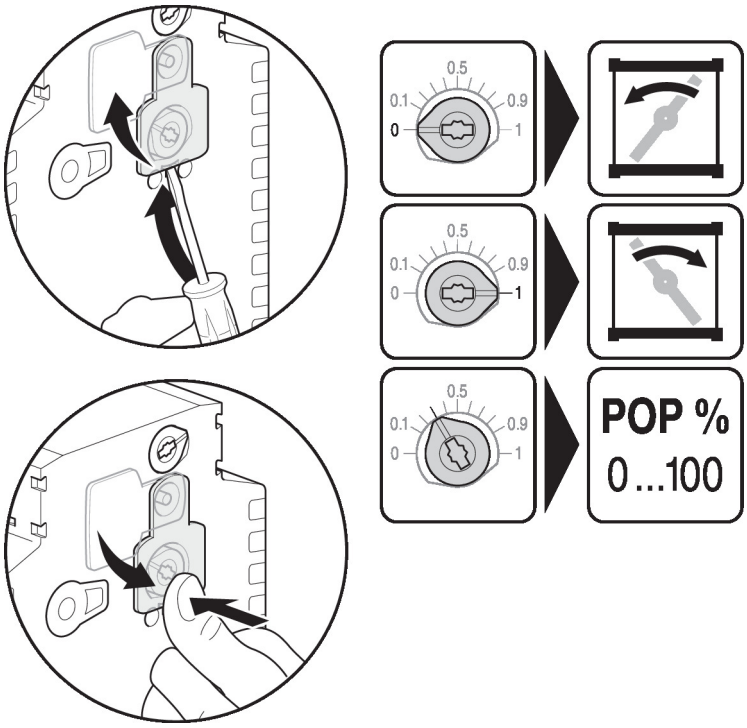

Dimensions

Shaft length

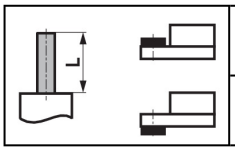	Min. 42
	Min. 20 mm [0.75"]

Clamping range

	8...26.7	≥8	≤26.7
*	8...20	≥8	≤20
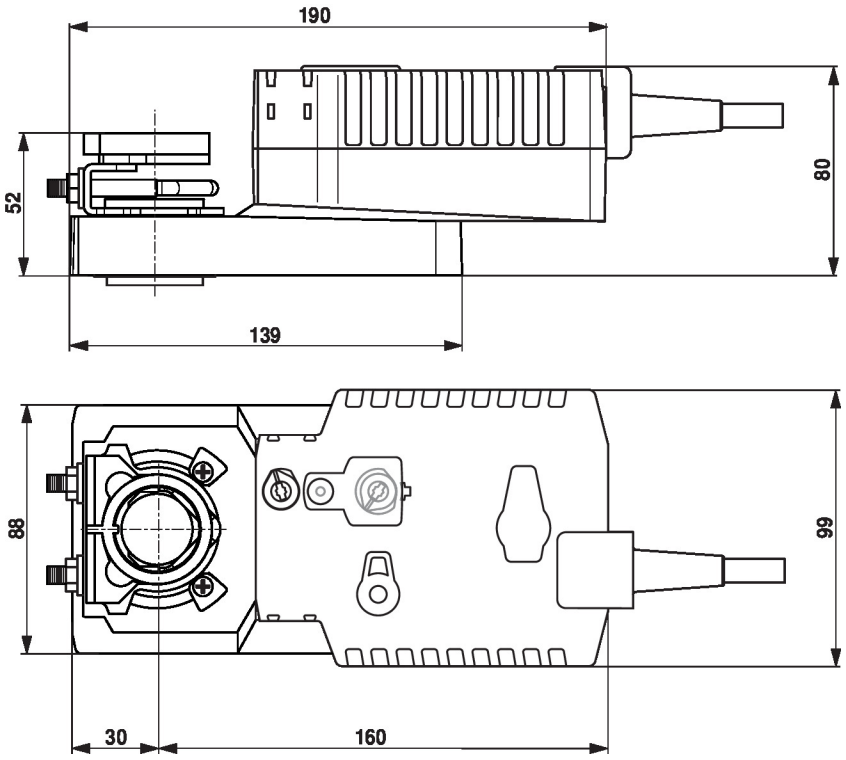
*Option: Shaft clamp mounted below: If an auxiliary switch or a feedback potentiometer is used the adapter Z-SPA is required.