VAV-Compact unit – with VAV controller, dynamic Δp sensor and damper actuator

- Field of application: VAV units in comfort applications
- Application: VAV/CAV, position control
- Belimo D3, dynamic flow sensor
- Functional range differential pressure 0...500 Pa
- Control communicative, modulating (0/2...10 V)
- Communication via Belimo MP-Bus
- Conversion of sensor signals
- Tool connection: Service socket, NFC interface

Picture may differ from product

Technical data

Electrical data	Nominal voltage	AC/DC 24 V
	Nominal voltage frequency	50/60 Hz
	Nominal voltage range	AC 19.2...28.8 V / DC 21.6...28.8 V
	Power consumption in operation	3 W
	Power consumption in rest position	1.5 W
	Power consumption for wire sizing	5 VA
	Inrush current (Imax)	8.0 A @ 5 ms
	Connection supply / control	Cable 1 m, 4x 0.75 mm²
Data bus communication	Communicative control	MP-Bus
	Number of nodes	MP-Bus max. 8
Functional data	Torque motor	10 Nm
	Operating range Y	2...10 V
	Input impedance	100 kΩ
	Operating range Y variable	0...10 V
	Position feedback U	2...10 V
	Position feedback U note	Max. 0.5 mA
	Position feedback U variable	Start point 0...8 V End point 2...10 V
	V'max adjustable	20...100% of V'nom
	V'mid adjustable	>V'min...<V'max
	V'min adjustable	0...100% of V'nom (<V'max)
	Manual override	with push-button, can be locked
	Angle of rotation	95°
	Angle of rotation note	adjustable mechanical or electrical limitation
	Mechanical interface	Universal shaft clamp 8...26.7 mm
	Position indication	Mechanical
Measuring data	Measuring principle	Belimo D3, dynamic flow sensor
	Installation orientation	position-independent, no zeroing necessary
	Functional range differential pressure	0...500 Pa
	Maximum system pressure	1500 Pa
	Burst pressure	±5 kPa
	Height compensation	Adjustment of system height (range 0...3000 m above sea level)
	Condition measuring air	0...50°C / 5...95% RH, non-condensing
	Pressure tube connection	Nipple diameter 5.3 mm
Safety data	Protection class IEC/EN	III, Protective Extra-Low Voltage (PELV)
	Degree of protection IEC/EN	IP54

Technical data

Safety data	Degree of protection NEMA/UL	NEMA 2
	Housing	UL Enclosure Type 2
	EMC	CE according to 2014/30/EU
	Certification IEC/EN	IEC/EN 60730-1 and IEC/EN 60730-2-14
	Type of action	Type 1
	Rated impulse voltage supply / control	0.8 kV
	Pollution degree	3
	Ambient humidity	Max. 95% RH, non-condensing
	Ambient temperature	0...50°C [32...122°F]
	Storage temperature	-20...80°C [-4...176°F]
	Servicing	maintenance-free
Weight	Weight	0.78 kg

Safety notes

- The device must not be used outside the specified field of application, especially not in aircraft or in any other airborne means of transport.
- Outdoor application: Only possible if no (sea) water, snow, ice, sunlight or aggressive gases act directly on the device and if it is ensured that the ambient conditions remain within the limit values specified in the data sheet at all times.
- Only authorised specialists may carry out installation. All applicable legal or institutional installation regulations must be complied with during installation.
- The device may only be opened at the manufacturer's site. It does not contain any parts that can be replaced or repaired by the user.
- Cables must not be removed from the device.
- The device contains electrical and electronic components and must not be disposed of as household refuse. All locally valid regulations and requirements must be observed.

Product features

Application

The VAV-Compact unit is used for comfort applications for pressure-independent control of VAV units. See Technical brochure – VAV-Compact product range for volumetric flow applications.

Pressure measurement

The integrated differential pressure sensor is also suitable for very small volumetric flows. The maintenance-free sensor technology enables a wide range of applications in the HVAC comfort area such as in residential buildings, offices, hotels, etc.

Actuators

For the various applications and damper designs, various actuator variants with torque 5, 10 or 20 Nm are available to the VAV unit manufacturer.

Control functions

Volumetric flow (VAV/CAV) or position control (Open Loop)

Application Variable Air Volume (VAV)

Variable air volume control in the V'min...V'max range, demand-dependent via a modulating reference variable (analogue or bus), e.g. room temperature or CO_2 controller for energy-saving air conditioning of individual rooms or zones.

V'nom, Δp @ V'nom

OEM-specific calibration parameters, suitable for the VAV unit

Adjustment range Δp @ V'nom: 38..500 Pa

V'max (Max)

Maximum operating volumetric flow, adjustable 20...100% V'nom

V'min (Min)

Minimum operating volumetric flow, adjustable 0...100% V'nom

Product features

Application Constant Air Volume (CAV)

Constant volumetric flow control. If required, via step switching (switching contacts) for constant volumetric flow applications.

Steps: CLOSE / Min / Max / OPEN (Mid)

Application Position Control (Open Loop)

Position control for integration of the VAV-Compact into an external VAV control loop. Transmitter and actuator unit.

Max

Range: 20...100 % rotation range

Min

Range: 0...100 % rotation range

Demand Controlled Ventilation (DCV)

Output of the demand signal (damper position) to the higher-level automation system – DCV function.

Configurable device

The factory settings cover the most common applications. Single parameters can be modified with Belimo Assistant 2.

Bus operation

Thanks to its MP-Bus functionality, the VAV-Compact can be easily integrated into a MP-Bus system. The communication interface and MP address is defined using service tools.

In bus mode, a sensor (0...10 V / passive) can optionally be connected, e.g. a temperature sensor or a switching contact, for integration into the higher-level bus system.

Operating settings

Control functions

Volumetric flow (VAV/CAV) or position control (Open Loop)

Operating settings Min/Max/Nom

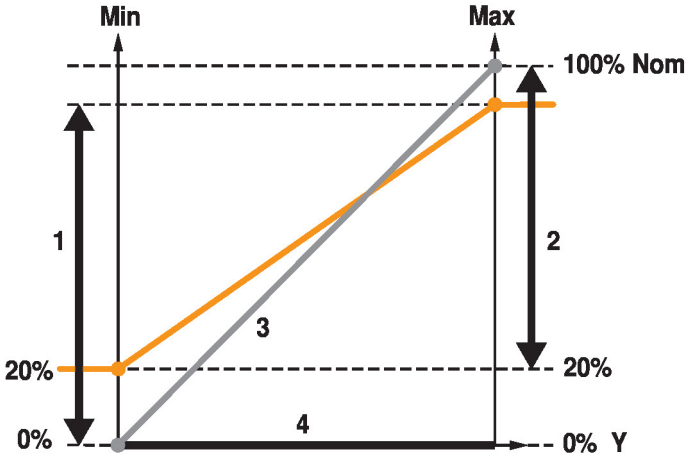

Nominal value (OEM setting) Nom
Adjustment range Min 1
Adjustment range Max 2
Feedback U 0...100% Nom 3
Control Y Min...Max 4

Operating and service tools

Belimo Assistant 2

Accessories

Tools

Description	Type
Service tool for wired and wireless setup, on-site operation and troubleshooting.	Belimo Assistant 2
Belimo Assistant Link Bluetooth and USB to NFC and MP-Bus converter for configurable and communicative devices	LINK.10
Connecting cable 5 m, A: RJ11 6/4 LINK.10, B: 6-pin for connection to service socket	ZK1-GEN
Connecting cable 5 m, A: RJ11 6/4 LINK.10, B: free wire end for connection to MP/PP terminal	ZK2-GEN

Electrical accessories

Description	Type
Positioner for wall mounting	CRP24-B1
Positioner for wall mounting	SGA24

Gateways

Description	Type
Gateway MP to BACnet MS/TP	UK24BAC

Accessories

Description	Type
Gateway MP to Modbus RTU	UK24MOD

Electrical installation

Supply from isolating transformer.

Wire colours:
1 = black
2 = red
3 = white
5 = orange

MP-Bus

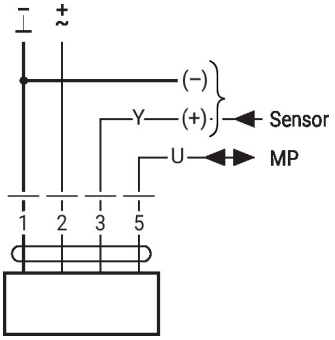

AC/DC 24 V, modulating

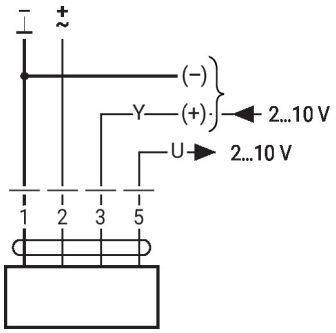

Parallel operation

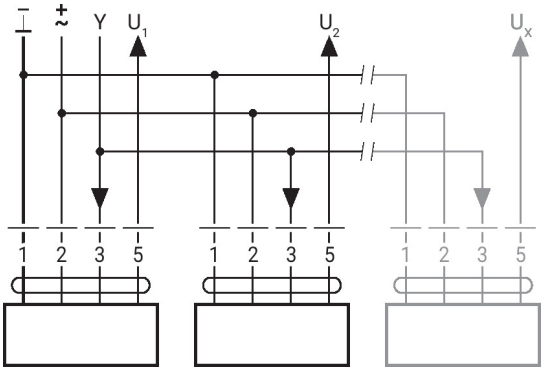

- Max. 8 actuators in parallel
- Parallel operation is permitted only on non-connected axes
- Do not fail to observe performance data with parallel operation

Primary/secondary operation

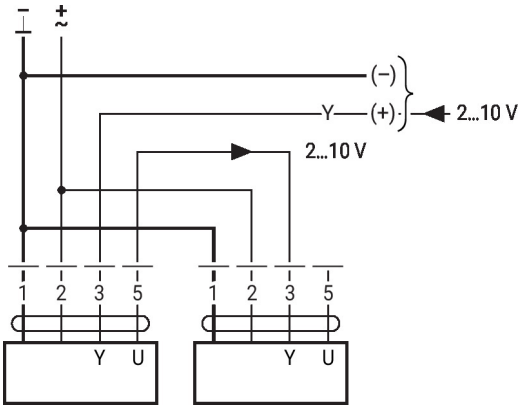

Further electrical installations

MP-Bus

Connection on the MP-Bus

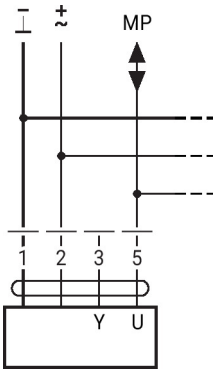

Max. 8 MP-Bus nodes

Connection of active sensors

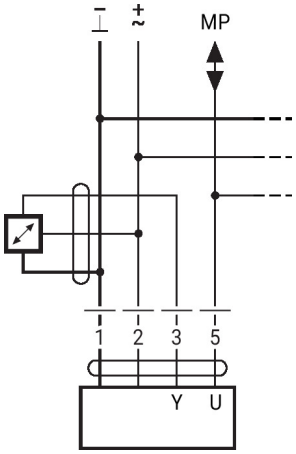

- Supply AC/DC 24 V
- Output signal 0...10 V (max. 0...32 V)
- Resolution 30 mV

Connection of external switching contact

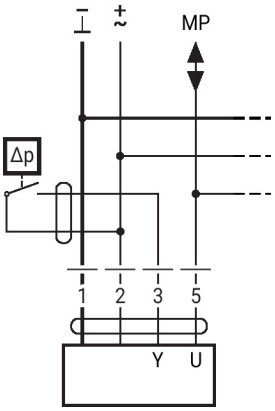

- Switching current 16 mA @ 24 V
- Start point of the operating range must be configured on the MP actuator as ≥0.5 V

Connection of passive sensors

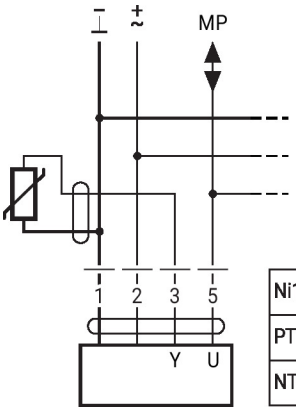

Ni1000	−28...+98°C	850...1600 Ω [2]
PT1000	−35...+155°C	850...1600 Ω [2]
NTC	−10...+160°C [1]	200 Ω...60 kΩ [2]

1) Depending on the type
2) Resolution 1 Ohm
Compensation of the measured value is recommended

Further electrical installations

Functions with specific parameters (configuration necessary)

CAV function, Belimo Assistant 2 setting: CLOSE - V'min - V'max (shut-off level 0.1 V)

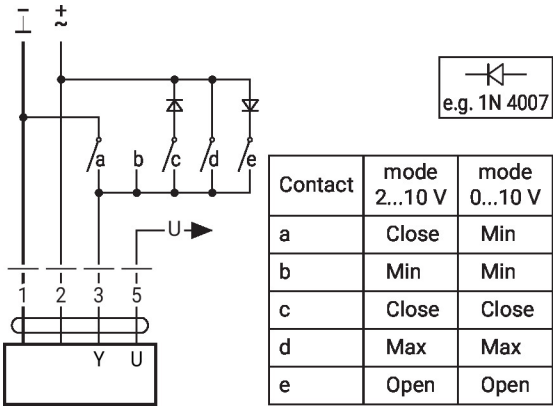

Contact	mode 2...10 V	mode 0...10 V
a	Close	Min
b	Min	Min
c	Close	Close
d	Max	Max
e	Open	Open

- Note that the contacts are mutually interlocking
- DC 24 V supply: option c and d not available
- Setting for CAV application: mode 2...10 V, shut-off level 0.1 V

CAV function, Belimo Assistant 2 setting: CLOSE - V'min - V'mid - V'max (NMV-D2M-compatible)

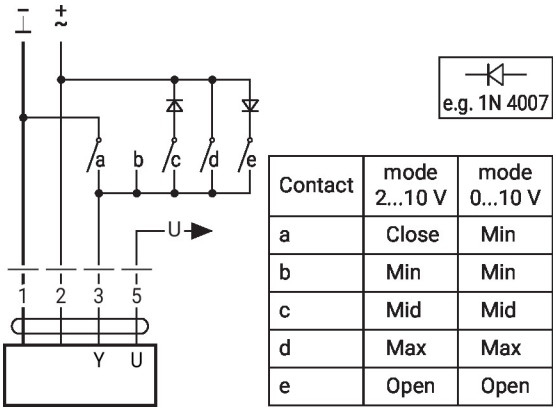

Contact	mode 2...10 V	mode 0...10 V
a	Close	Min
b	Min	Min
c	Mid	Mid
d	Max	Max
e	Open	Open

- Note that the contacts are mutually interlocking
- Setting parameters for CAV application: V'min - V'mid - V'max (NMV-D2M-compatible)

Parameter and tool overview

Settings and tool function

Designation	Setting values, limits, explanations	Units	Tool: ZTH EU	Tool: PC-Tool	Tool: Belimo Assistant 2	Remarks
System-specific data						
Position	16 characters, e.g. Office 4 6th OG ZL	String	r	r/w	r/w	
Designation	16 characters: Unit designation, etc.	String	r	r/w[1]	r	
Address	PP / MP1...8		r/w	r/w	r/w[2]	PP: 0...10 / 2...10 V MP1...8: MP mode
V'_{max}	20...100% [V'_{nom}]	m³/h / l/s / cfm	r/w	r/w	r/w	>/= V'_{min}
V'_{mid}	V'_{min}...V'_{max}	m³/h / l/s / cfm	r/w	r/w	r/w	
V'_{min}	0...100% [V'_{nom}]	m³/h / l/s / cfm	r/w	r/w	r/w	</= V'_{max}
Altitude of installation	0...3000	m	r/w	r/w	r/w	Adaptation of Δp sensor to altitude (meters above sea level)
Controller Settings						
Control function	Volumetric flow / Position control (Open Loop)		–	r/w	r/w[2]	
Mode	0...10 / 2...10	V	r/w[2]	r/w	r/w[2]	
CAV function	CLOSE/V'_{min}/V'_{max}; Shut-off level CLOSE 0.1 CLOSE/V'_{min}/V'_{max}; Shut-off level CLOSE 0.5 V'_{min}/V'_{mid}/V'_{max}; (NMV-D2M-comp.)		–	r/w	–	
Positioning signal Y	Start value: 0...30; Stop value: 2...32	V	r	r/w	r	
Feedback U	Volume / Damper position / Δp		–	r/w	–	Definition of feedback signal
Feedback U	Start value: 0...8; Stop value: 2...10	V	–	r/w	–	
Behaviour when switched on (Power-on)	No action / Adaptation / Synchronisation		–	r/w	–	
Synchronisation behaviour	Y=0% Y=100%		–	r/w	–	Synchronisation at damper position 0 or 100%
Bus fail position	Last setpoint / Damper CLOSE V'_{min} / V'_{max} / Damper OPEN		–	r/w	–	
Unit-specific settings						
V'_{nom}	0...60'000 m³/h	m³/h / l/s / cfm	r	r/(w)[1]	r	Unit-specific setting value
Δp@V'_{nom}	38...500	Pa	r	r/(w)[1]	r	Unit-specific setting value
NFC interface	Read / Read and write		–	r/(w)[1]	r	
Print function label			–	w	–	
Other settings						
Direction of rotation (for Y=100%)	cw/ccw		r/w[2]	r/w	r/w[2]	
Range of rotation	Adapted[2] / programmed 30...95	°	–	r/w	–	
Torque	100 / 75 / 50 / 25	%		r/w		% of nominal torque
Renovation of old systems (Retrofit of old VAV units with leaking damper)						
Suppress damper leakage	Yes / No		–	r/w[1]	–	Suppresses volume display with damper closed

[1] Write function accessible only for VAV manufacturers
[1] Access only via Servicing level 2
[2] Within the mechanical limitation

Parameter and tool overview

Settings and tool function

Designation	Setting values, limits, explanations	Units	Tool: ZTH EU	Tool: PC-Tool	Tool: Belimo Assistant 2	Remarks
Operating data						
Actual value / Setpoint Damper position		m³/h / l/s / cfm Pa / %	r –	r T	r T	T (Trend) display
Simulation	Damper OPEN/CLOSE V'min / V'mid / V'max / Motor Stop		w	w	–	
Running times	Operating time, running time Ratio (relation)	h %	–	r	r	
Alarm messages	Setting range enlarged, Mech. overload, Stop&Go ratio too high		–	r/w	–	
Serial number	Device ID		r	r	r	Incl. production date
Type	Type designation		r	r	r	
Version display	Firmware, Config. table ID		r	r	–	
Configuration data						
Print, send			–	yes	yes	
Backup in file			–	yes	yes	
Log data / Logbook	Activities log		–	yes	–	Incl. complete setting data

Operating controls and indicators

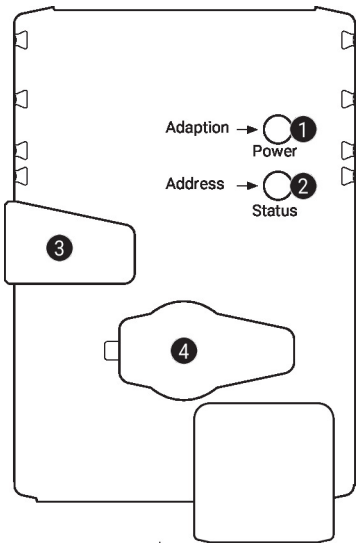

1 Push-button and LED display green

Off:	No power supply or malfunction
On:	In operation
Press button:	Triggers angle-of-rotation adaptation, followed by standard mode

2 Push-button and LED display yellow

Off:	Standard mode
On:	Adaptation or synchronisation process active
Flickering:	MP-Bus communication active
Flashing:	Request for addressing from MP client
Press button:	Confirmation of the addressing

3 Manual override button

Press button:	Gear train disengages, motor stops, manual override possible
Release button:	Gear train engages, synchronisation starts, followed by standard mode

4 Service plug
For connecting configuration and service tools

Check power supply connection

1 Off and 2 On	Possible wiring error in power supply

Installation notes

Installation situation

Mounting VAV-Compact control equipment:

The VAV-Compact is assembled, set and calibrated on the VAV unit in the factory by the VAV unit manufacturer.

Installation of the VAV unit:

The VAV unit must be installed according to the specifications of the VAV unit manufacturer.

Installation specification Δp sensor:

No restrictions, but it must be avoided that any condensation can run into the sensor and remain there.

Accessibility of control equipment:

Accessibility to the control equipment must be guaranteed at all times.

Pressure tube connections:

The pressure tube connections must not come into contact with liquids or greasing agents of any kind, this includes any residue inside or on the surface of the pressure tubes.

Servicing

Cleaning work during installation, commissioning or maintenance

Belimo VAV devices are maintenance-free. We recommend dry removal of dust from the outside of the housing if necessary.

The duct system and the VAV units are maintained on the occasion of the cleaning intervals required by law or by the specific system. Please observe the following points.

Cleaning work on the damper, differential pressure pickup devices and pressure tubes

When cleaning the duct system or the VAV unit, remove the pressure tubes on the VAV controller so that it will not be affected.

Using compressed air, e.g. blowing out the differential pressure pickup devices or pressure tubes

Before doing this work, disconnect the differential pressure pickup devices or pressure tubes from the differential pressure sensor.

Connecting the pressure tubes

To ensure the correct installation of the pressure tubes, we recommend marking them with + or – before disassembly.

Service

Using Belimo Assistant 2, device parameters can be modified. Belimo Assistant 2 can operate on a smartphone, tablet or PC. The available connection options vary depending on the hardware on which Belimo Assistant 2 is installed.

For more information about Belimo Assistant 2, refer to the Quick Guide – Belimo Assistant 2.

Service

Wireless connection

Belimo devices marked with the NFC logo can be accessed either directly with an NFC-capable smartphone or with a Bluetooth-capable smartphone connected to Belimo Assistant Link.

Requirement:

- NFC- or Bluetooth-capable smartphone or tablet
- Belimo Assistant 2 (Google Play and Apple App Store)

Align the NFC-capable smartphone or Belimo Assistant Link with the device's NFC logo so that both NFC antennas are superposed.

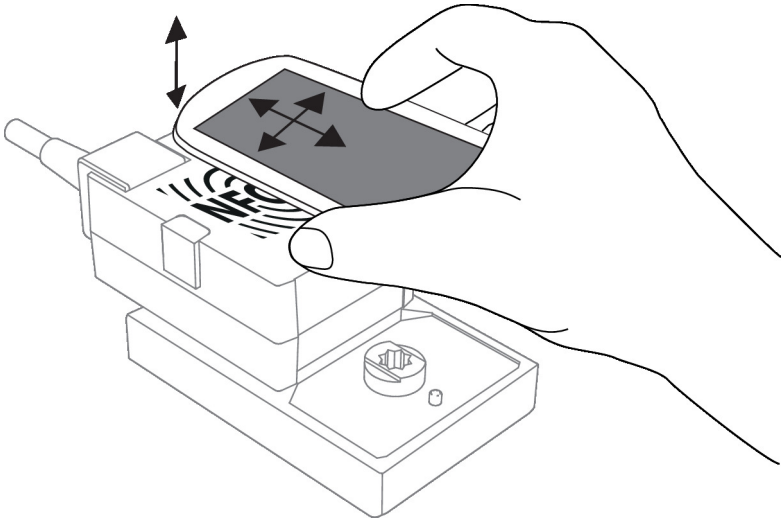

Wired connection

Belimo devices can be accessed by connecting Belimo Assistant Link to the USB port on a PC or laptop and to the Service Socket or MP-Bus wire on the device.

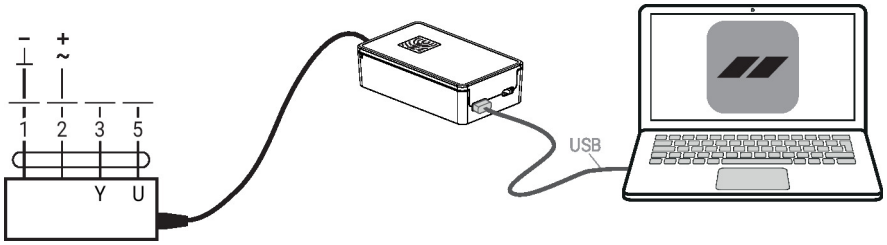

Dimensions

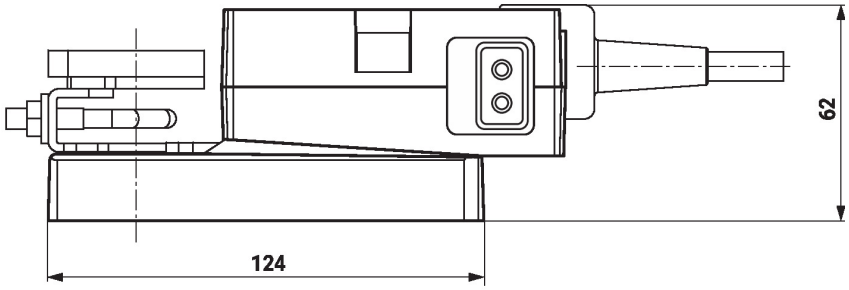

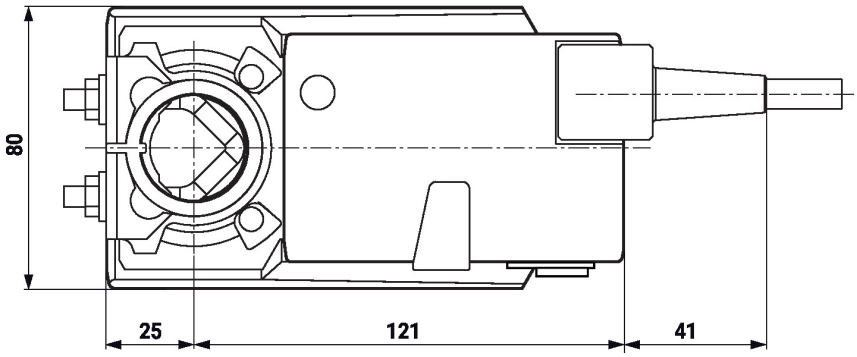

Further documentation

- VAV-Compact product range for comfort applications
- Tool connections
- Overview MP Cooperation Partners
- Introduction to MP-Bus Technology
- VAV-Universal application description
- Volumetric flow and pressure control from Belimo, product range overview
- Quick Guide – Belimo Assistant 2