Rotary actuator fail-safe for butterfly valves

- Torque motor 160 Nm
- Nominal voltage AC 24...240 V / DC 24...125 V
- Control modulating, communicative, hybrid
- With 2 integrated auxiliary switches
- Conversion of sensor signals
- Communication via BACnet MS/TP, Modbus RTU, Belimo-MP-Bus or conventional control

## Technical data

| | | |
|---|---|---|
| **Electrical data** | Nominal voltage | AC 24...240 V / DC 24...125 V |
| | Nominal voltage frequency | 50/60 Hz |
| | Nominal voltage range | AC 19.2...264 V / DC 19.2...137.5 V |
| | Power consumption in operation | 52 W |
| | Power consumption in rest position | 9 W |
| | Power consumption for wire sizing | with 24 V 54 VA / with 240 V 68 VA |
| | Power consumption for wire sizing note | Imax 20 A @ 5 ms |
| | Auxiliary switch | 2x SPDT, 1x 10° / 1x 0...90° (default setting 85°) |
| | Switching capacity auxiliary switch | 1 mA...3 A (0.5 A inductive), DC 5 V...AC 250 V |
| | Connection supply | Terminals 2.5 $mm^2$ |
| | Connection protective earth | earth terminal |
| | Connection control | Terminals 1.5 $mm^2$ |
| | Connection auxiliary switch | Terminals 2.5 $mm^2$ |
| | Parallel operation | Yes (note the performance data) |
| **Data bus communication** | Communicative control | BACnet MS/TP<br>Modbus RTU<br>MP-Bus |
| | Number of nodes | BACnet / Modbus see interface description<br>MP-Bus max. 8 |
| **Functional data** | Torque motor | 160 Nm |
| | Operating range Y | 2...10 V |
| | Input impedance | 100 kΩ |
| | Operating range Y variable | 0.5...10 V<br>4...20 mA |
| | Position feedback U | 2...10 V |
| | Position feedback U note | Max. 0.5 mA |
| | Position feedback U variable | 0.5...10 V |
| | Setting fail-safe position | 0...100%, adjustable with Belimo Assistant App (default setting 0%) |
| | Bridging time (PF) | 2 s |
| | Bridging time (PF) variable | 0...10 s |
| | Position accuracy | ±5% |
| | Manual override | hand crank |
| | Running time motor | 35 s / 90° |
| | Running time motor variable | 30...120 s |

## Technical data

| | | |
|---|---|---|
| **Functional data** | Running time fail-safe | 30 s / 90° |
| | Sound power level, motor | 68 dB(A) |
| | Sound power level, fail-safe | 61 dB(A) |
| | Position indication | Mechanical, integrated |
| **Safety data** | Protection class IEC/EN | I, protective earth (PE) |
| | Protection class UL | I, protective earth (PE) |
| | Degree of protection IEC/EN | IP66/67 |
| | Degree of protection NEMA/UL | NEMA 4X |
| | Enclosure | UL Enclosure Type 4X |
| | EMC | CE according to 2014/30/EU |
| | Low voltage directive | CE according to 2014/35/EU |
| | Certification IEC/EN | IEC/EN 60730-1 and IEC/EN 60730-2-14 |
| | UL Approval | cULus according to UL60730-1A, UL60730-2-14 and CAN/CSA E60730-1<br>The UL marking on the actuator depends on the production site, the device is UL-compliant in any case |
| | Type of action | Type 1.AA |
| | Rated impulse voltage supply | 4 kV |
| | Rated impulse voltage control | 0.8 kV |
| | Rated impulse voltage auxiliary switch | 2.5 kV |
| | Pollution degree | 3 |
| | Ambient humidity | Max. 100% RH |
| | Ambient temperature | -30...50°C [-22...122°F] |
| | Storage temperature | -40...80°C [-40...176°F] |
| | Servicing | maintenance-free |
| **Mechanical data** | Connection flange | F07 (F05/F10 only with accessory) |
| **Weight** | Weight | 6.5 kg |
| **Terms** | Abbreviations | POP = Power off position / fail-safe position<br>CPO = Controlled power off / controlled fail-safe<br>PF = Power fail delay time / bridging time |

## Safety notes

- This device has been designed for use in stationary heating, ventilation and air-conditioning systems and must not be used outside the specified field of application, especially in aircraft or in any other airborne means of transport.
- Caution: Power supply voltage!
- The device has a protective earthing. Incorrect connection of the protective earth can lead to hazards due to electrical shock.
- Only authorised specialists may carry out installation. All applicable legal or institutional installation regulations must be complied with during installation.
- Apart from the connection box, the device may only be opened at the manufacturer's site. It does not contain any parts that can be replaced or repaired by the user.
- The device contains electrical and electronic components and must not be disposed of as household refuse. All locally valid regulations and requirements must be observed.
- The two switches integrated in the actuator are to be operated either on power supply voltage or at safety extra-low voltage. The combination power supply voltage/safety extra-low voltage is not permitted.

## Product features

**Fields of application**

The actuator is particularly suitable for utilisation in outdoor applications and is protected against the following weather conditions:
- UV radiation
- Dirt / Dust
- Rain / Snow
- Air humidity

**Pre-charging time (start up)**

The capacitor actuators require a pre-charging time. This time is used for charging the capacitors up to a usable voltage level. This ensures that, in the event of a power failure, the actuator can move at any time from its current position into the preset fail-safe position.

The duration of the pre-charging time depends mainly on following factors:

– Duration of the power failure

– PF delay time (bridging time)

Typical pre-charging time

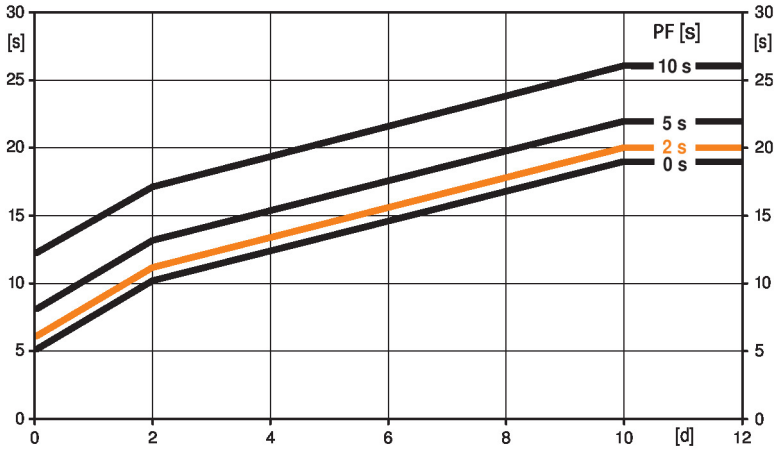


[d] = Power failure in days
[s] = Pre-charging time in seconds
PF[s] = Bridging time
Calculation example: Given a power failure of 3 days and a bridging time (PF) set at 5 s, the actuator requires a pre-charging time of 14 s after the power has been reconnected (see graphic).

| PF [s] | [d] | | | | |
|---|---|---|---|---|---|
| | 0 | 1 | 2 | 7 | ≥10 |
| 0 | 5 | 8 | 10 | 15 | 19 |
| 2 | 6 | 9 | 11 | 16 | 20 |
| 5 | 8 | 11 | 13 | 18 | 22 |
| 10 | 12 | 15 | 17 | 22 | 26 |
| | [s] | | | | |

**Delivery condition (capacitors)**

The actuator is completely discharged after delivery from the factory, which is why the actuator requires approximately 20 s pre-charging time before initial commissioning in order to bring the capacitors up to the required voltage level.

**Bridging time**

Power failures can be bridged up to a maximum of 10 s.

In the event of a power failure, the actuator will remain stationary in accordance with the set bridging time. If the power failure is greater than the set bridging time, then the actuator will move into the selected fail-safe position.

The pre-programmed bridging time is set to 2 s. This can be modified on site in operation with the use of the "Belimo Assistant App".

**Setting fail-safe position (POP)**

The desired fail-safe position can be set 0...100% with the "Belimo Assistant App" or ZTH EU. The setting always refers to the adapted angle of rotation range. In the event of a power failure, the actuator will move into the selected fail-safe position.

**Converter for sensors**

Connection option for two sensors (passive, active or switching contacts). In this way, the analogue sensor signal can be easily digitised and transferred to the bus systems BACnet or Modbus.

## Product features

**Internal heating**

An internal heater prevents condensation buildup.

Thanks to the integrated temperature and humidity sensor, the built-in heater automatically switches on/off.

**Parametrisable actuators**

The factory settings cover the most common applications.

The Belimo Assistant App is required for parametrisation via Near Field Communication (NFC) and simplifies commissioning. Moreover, it provides a variety of diagnostic options.

The ZTH EU service tool provides a selection of both diagnostic and setting options.

**Combination analogue - communicative (hybrid mode)**

With conventional control by means of an analogue control signal, BACnet or Modbus can be used for the communicative position feedback

**Simple direct mounting**

Simple direct mounting on the butterfly valve. The mounting orientation in relation to the butterfly valve can be selected in 90° (angle) increments.

**Manual override**

The valve can be manually operated using a hand crank. Unlocking is carried out manually by removing the hand crank.

**High functional reliability**

The actuator is overload protected, requires no limit switches and automatically stops when the end stop is reached.

**Flexible signalling**

The actuator has one auxiliary switch with a fixed setting (10°) and one adjustable auxiliary switch (0...90°).

## Accessories

**Electrical accessories**

| Description | Type |
|---|---|
| Signal converter voltage/current 100 kΩ 4...20 mA, Supply AC/DC 24 V | Z-UIC |

**Mechanical accessories**

| Description | Type |
|---|---|
| Position indicator and tappet shaft, F07, square 45° offset, SW 17, DN 125...300 | ZPR01 |
| Tappet shaft, F07, square 45° offset, SW 17 | ZPR02 |
| Position indicator and tappet shaft, F05, square 45° offset, SW 14, DN 80...100 | ZPR03 |
| RetroFIT+ adapter kit, F07/F10 (incl. screws F07), flat head/square, SW 17 | ZPR05 |
| RetroFIT+ adapter kit, F07/F10 (incl. screws F07), square 45° offset, SW 14 | ZPR06 |
| Adapter kit with spacer ring, F07, square 45° offset, SW 17 | ZPR08 |
| RetroFIT+ adapter kit, F07/F05/F10 (incl. screws F07), flat head/square, SW 14 | ZPR09 |
| RetroFIT+ adapter kit, F05/F07/F10 (incl. screws F05), flat head/square, SW 14 | ZPR10 |
| RetroFIT+ adapter kit, F07/F10 (incl. screws F07), square 45° offset, SW 18 | ZPR11 |
| RetroFIT+ adapter kit, F07/F10 (incl. screws F07), flat head/square, SW 16 | ZPR12 |
| RetroFIT+ adapter kit, F07/F05/F10 (incl. screws F07), flat head/square, SW 11 | ZPR13 |
| RetroFIT+ adapter kit, F07/F05/F10 (incl. screws F07), flat head/square, SW 12.7 | ZPR14 |
| RetroFIT+ adapter kit, F07/F10 (incl. screws F07), square 45° offset, SW 11 | ZPR15 |
| Hand crank for PR/PM/JR actuator | ZPR20 |
| Spacer ring, F04/F05, Height 22 mm | ZRI-001 |
| Spacer ring, F05/F07, Height 23.5 mm | ZRI-002 |

## Accessories

| Tools | Description | Type |
|---|---|---|
| | Belimo Assistant App, Smartphone app for easy commissioning, parametrising and maintenance | Belimo Assistant App |
| | Converter Bluetooth / NFC | ZIP-BT-NFC |
| | Service tool, with ZIP-USB function, for parametrisable and communicative Belimo actuators, VAV controller and HVAC performance devices | ZTH EU |
| | Connecting cable 5 m, A: RJ11 6/4 ZTH EU, B: 6-pin for connection to service socket | ZK1-GEN |

| Sensors | Description | Type |
|---|---|---|
| | Duct/Immersion sensor Temperature 500 mm x 6 mm Pt1000 | 01DT-1BH |
| | Duct/Immersion sensor Temperature 500 mm x 6 mm Ni1000 | 01DT-1CH |
| | Duct/Immersion sensor Temperature 100 mm x 6 mm Pt1000 | 01DT-1BL |
| | Duct/Immersion sensor Temperature 100 mm x 6 mm Ni1000 | 01DT-1CL |
| | Duct/Immersion sensor Temperature 150 mm x 6 mm Pt1000 | 01DT-1BN |
| | Duct/Immersion sensor Temperature 150 mm x 6 mm Ni1000 | 01DT-1CN |
| | Duct/Immersion sensor Temperature 200 mm x 6 mm Pt1000 | 01DT-1BP |
| | Duct/Immersion sensor Temperature 200 mm x 6 mm Ni1000 | 01DT-1CP |
| | Duct/Immersion sensor Temperature 300 mm x 6 mm Pt1000 | 01DT-1BR |
| | Duct/Immersion sensor Temperature 300 mm x 6 mm Ni1000 | 01DT-1CR |
| | Duct/Immersion sensor Temperature 450 mm x 6 mm Pt1000 | 01DT-1BT |
| | Duct/Immersion sensor Temperature 450 mm x 6 mm Ni1000 | 01DT-1CT |

## Electrical installation

**Caution: Power supply voltage!**

**Parallel connection of other actuators possible. Observe the performance data.**

**The wiring of the line for BACnet MS/TP / Modbus RTU is to be carried out in accordance with applicable RS-485 regulations.**

**Wiring diagrams**

AC 24...240 V / DC 24...125 V

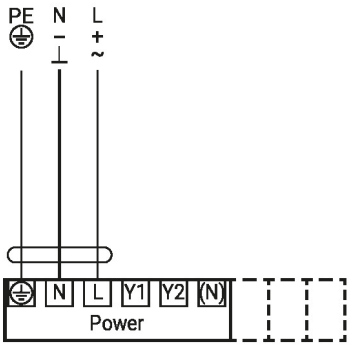


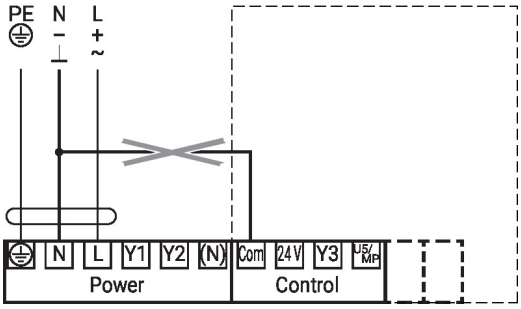


Power supply must not be connected to the signal terminals!

**Wiring diagrams**

Modulating control

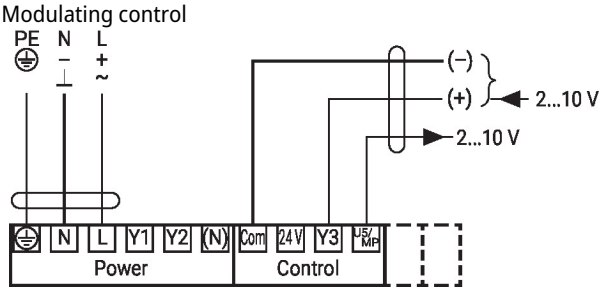


Parallel circuit 2...10 V

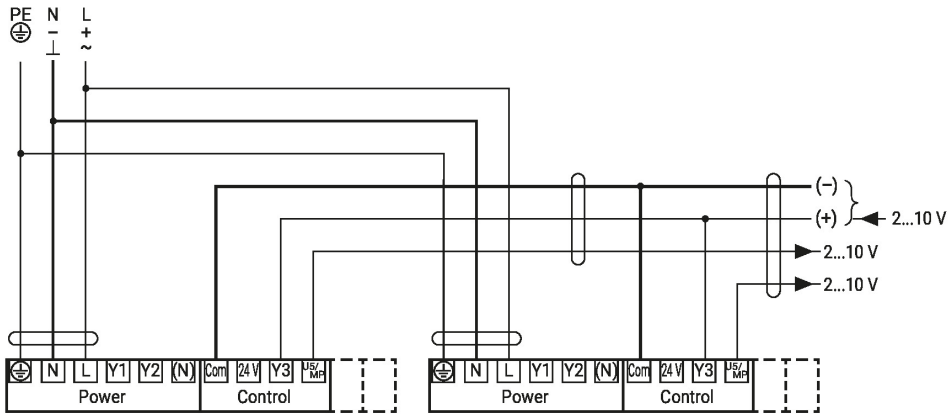


Setpoint 2...10 V

Parallel circuit 4...20 mA

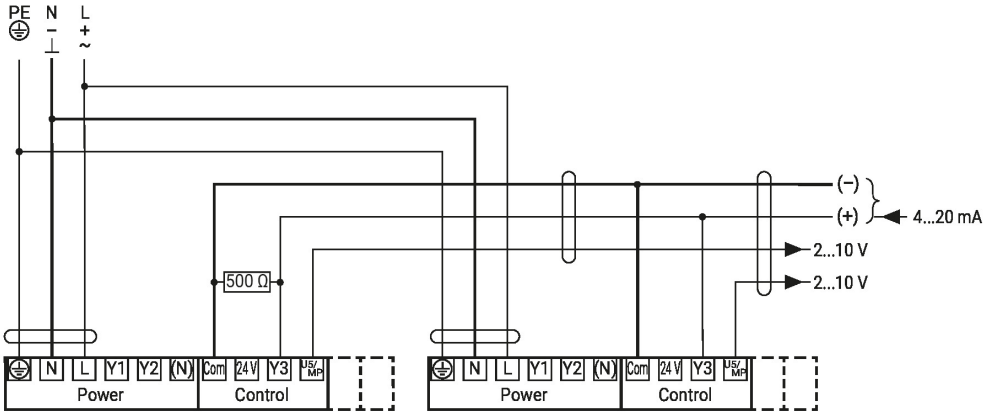


Setpoint 2...10 V

## Electrical installation

### Wiring diagrams

Connection BACnet MS/TP / Modbus RTU with analogue primary/secondary operation

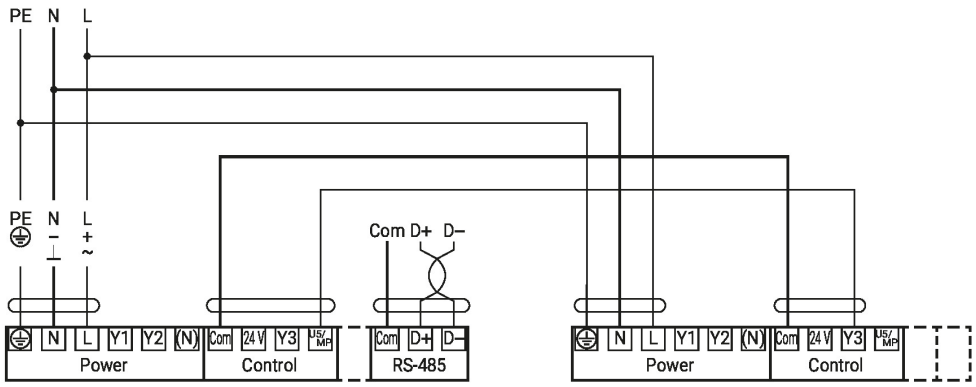


Auxiliary switch

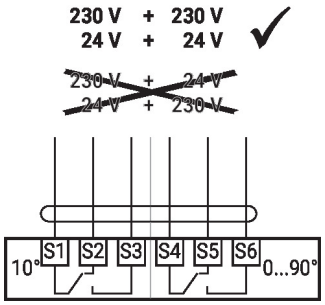


## Functions

### Functions with specific parameters (NFC)

Control open/close

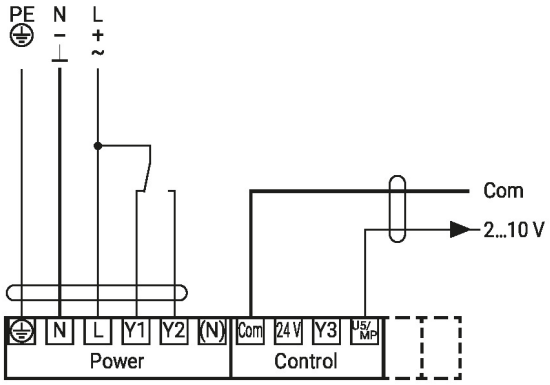


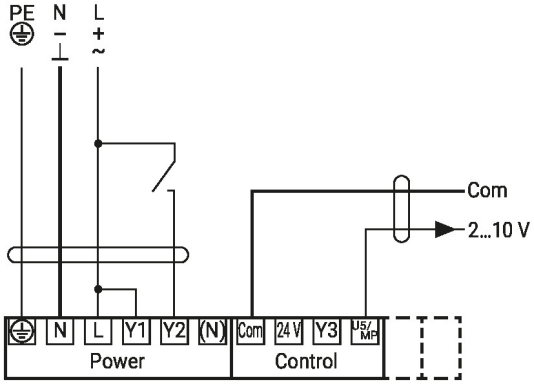


Control 3-point

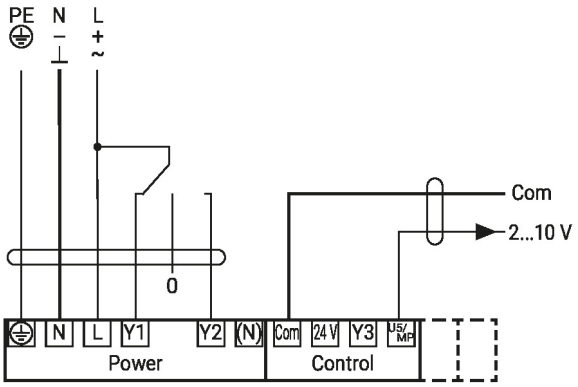

**Functions with specific parameters (NFC)**

Control 4...20 mA

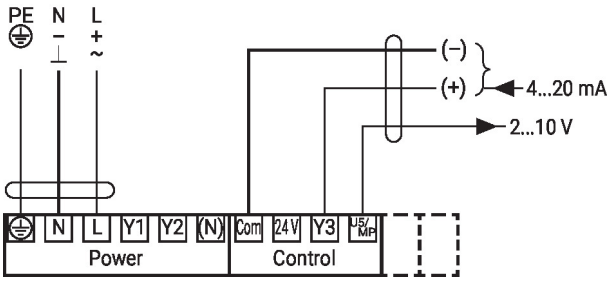


Positioner SG..

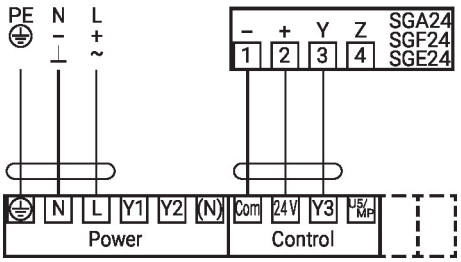


**Note**
Maximum output power «DC 24 V out» 1.2 W @ 50 mA!
A separate isolating transformer must be used for higher performance!

Connection on the MP-Bus

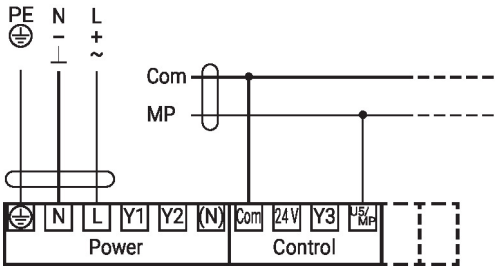


Max. 8 additional actuators

MP-Bus Network topology

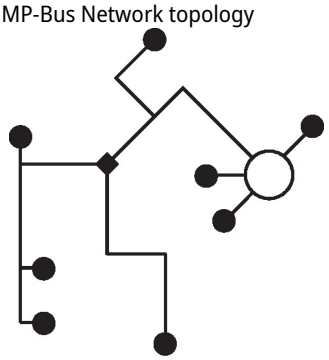

There are no restrictions for the network topology (star, ring, tree or mixed forms are permitted).
Supply and communication in one and the same 3-wire cable
• no shielding or twisting necessary
• no terminating resistors required

Connection BACnet MS/TP / Modbus RTU

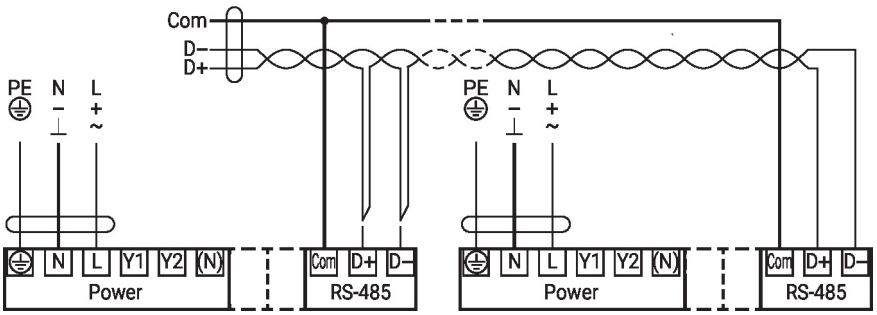

## Functions

### Functions with specific parameters (NFC)

Connection BACnet MS/TP / Modbus RTU with analogue setpoint (hybrid mode)

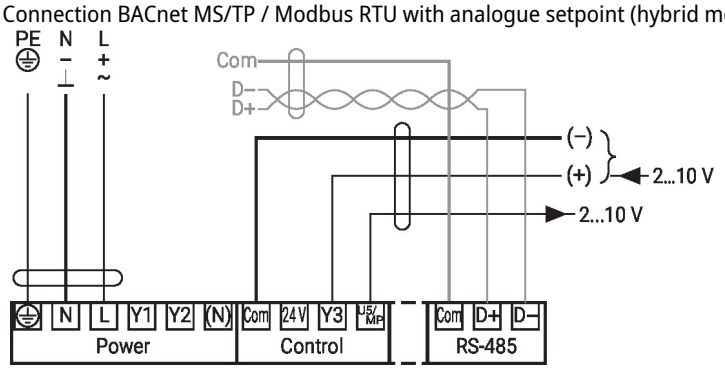


Connection of passive sensors (BACnet MS/TP / Modbus RTU)

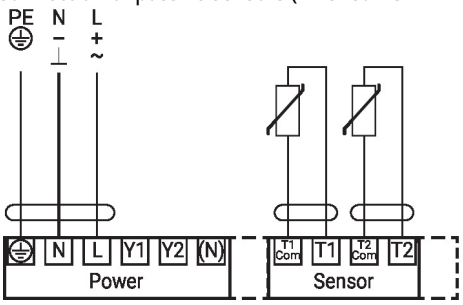


| 1) | 2) |
|---|---|
| 200 Ω...2 kΩ | 0.1 Ω |
| 2 kΩ...10 kΩ | 1 Ω |
| 10 kΩ...55 kΩ | 10 Ω |

1) Resistance range
2) Resolution
Compensation of the measured value is recommended
- Suitable for Ni1000 and Pt1000
- Suitable Belimo types 01DT-..

Connection of active sensors (BACnet MS/TP / Modbus RTU)

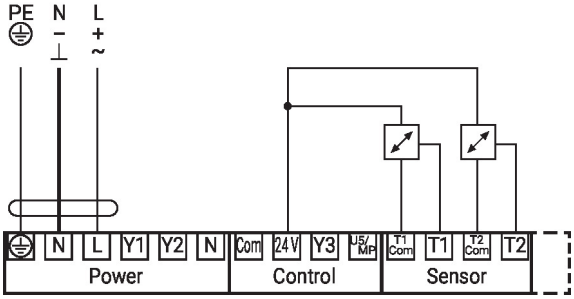


Possible input voltage range:
0...10 V
Resolution 5 mV
To capture for example:
- Active temperature sensors
- Flow sensors
- Pressure / differential pressure sensors

Switching contact connection (BACnet MS/TP / Modbus RTU)

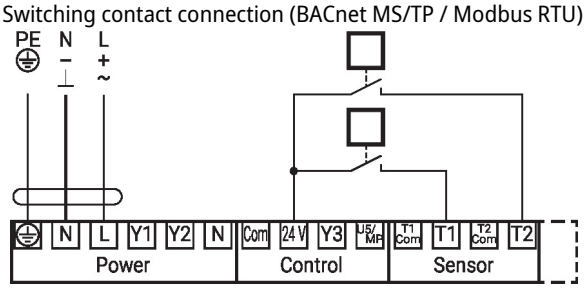


Switching contact requirements:
The switching contact must be able to switch a current of 16 mA at 24 V accurately.
To capture for example:
- Flow monitors
- Operation / malfunction messages of chillers

## Operating controls and indicators

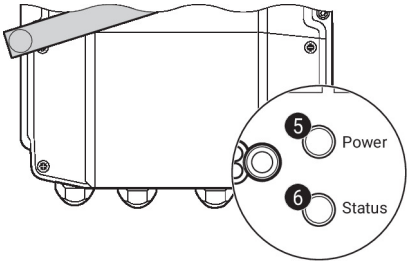


**5 Push-button and LED display green**

| | |
|---|---|
| Off: | No power supply or malfunction |
| On: | In operation |
| Press button: | Triggers test run, followed by standard mode |

**6 Push-button and LED display yellow**

| | |
|---|---|
| Off: | Standard mode |
| On: | Test run active |
| Flickering: | BACnet / Modbus communication active |
| Flashing: | Request for addressing from MP client |
| Press button: | Confirmation of the MP addressing |

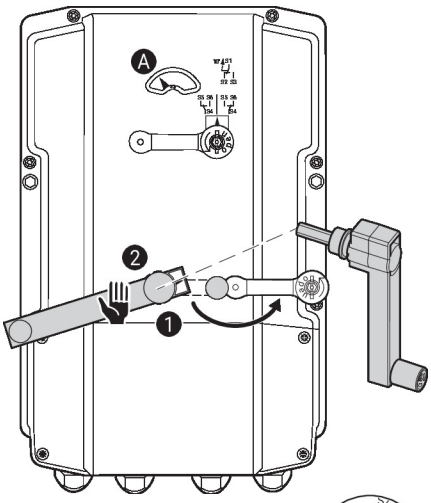


### Auxiliary switch settings

**Note:** Perform settings on the actuator only in deenergised state.

**For the auxiliary switch position settings, carry out points 1 to 4 successively.**

**1 Gear train disengagement**
Opening the manual override cover and adjusting the hand crank.
Manual override is possible.

**2 Manual override**
Turn the hand crank until the desired switching position A is indicated and then remove the hand crank.

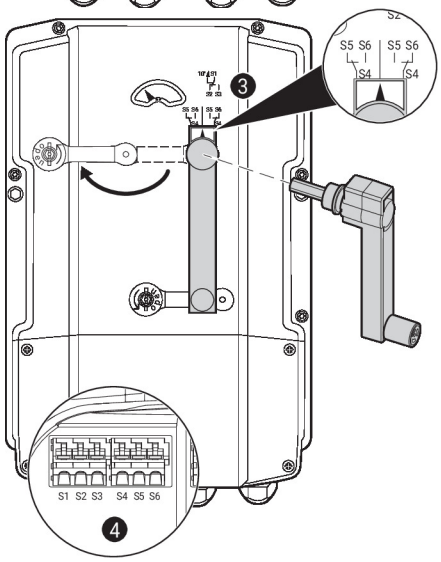


**3 Auxiliary switch**
For the auxiliary switch position settings, carry out points 1 to 4 successively.
Opening the auxiliary switch adjustment cover and adjusting the hand crank.
Turn the hand crank until the arrow points to the vertical line.

**4 Terminals**
Connect continuity tester to S4 + S5 or to S4 + S6.
If the auxiliary switch should switch in the opposite direction, rotate the hand crank by 180°.

## Service

**NFC connection**

Belimo devices marked with the NFC logo can be operated with the Belimo Assistant App.

Requirement:

- NFC- or Bluetooth-capable smartphone
- Belimo Assistant App (Google Play & Apple AppStore)

Align NFC-capable smartphone on the device so that both NFC antennas are superposed.

Connect Bluetooth-enabled smartphone via the Bluetooth-to-NFC Converter ZIP-BT-NFC to the device. Technical data and operation instructions are shown in the ZIP-BT-NFC data sheet.

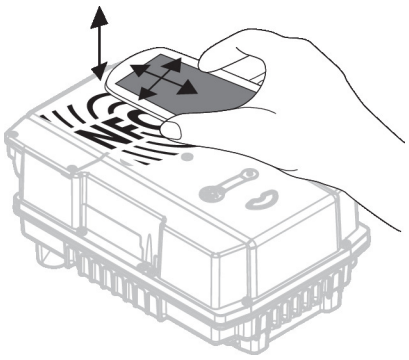

**Tool connection**

The actuator can be configured by the ZTH EU via the service socket.

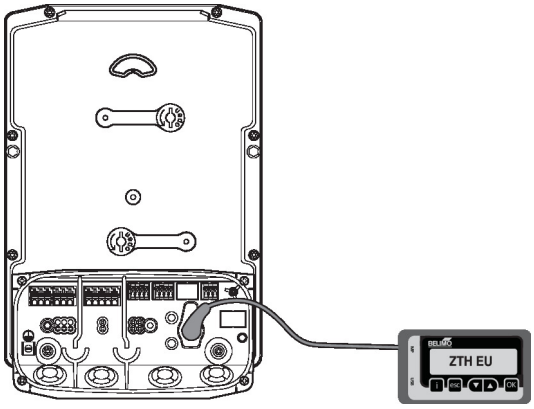

## Dimensions

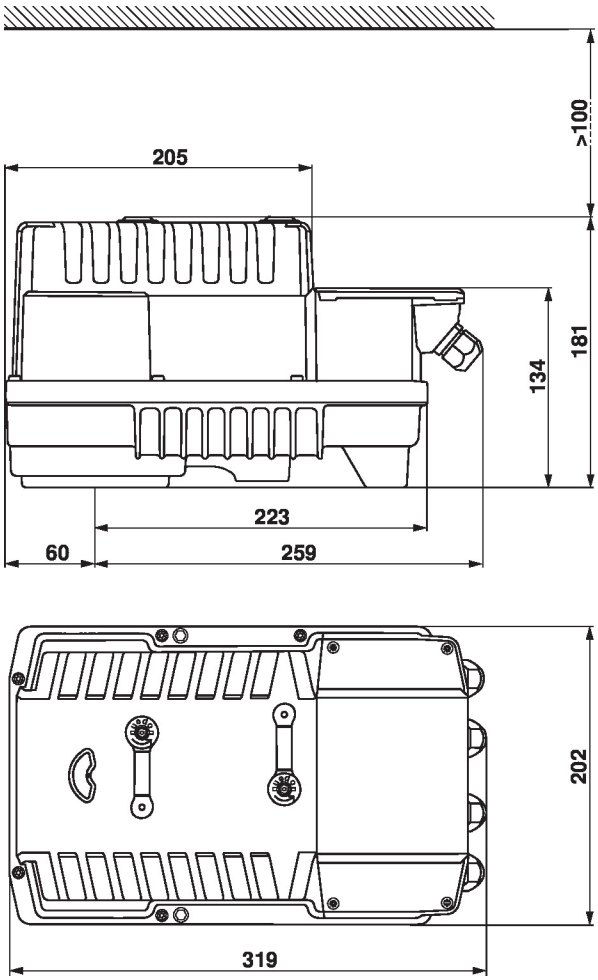


## Further documentation

- Tool connections
- BACnet Interface description
- Modbus Interface description
- Overview MP Cooperation Partners
- Introduction to MP-Bus Technology
- MP Glossary
- The complete product range for water applications
- Data sheets for butterfly valves
- Installation instructions for actuators and/or butterfly valves
- General notes for project planning