Differential pressure switch

For monitoring overpressure, vacuum and differential pressure of air or other non-combustible, non-aggressive gases for both HVAC and energy management applications. Automatic reset and field adjustable setpoints and switching hysterese.

Type Overview

Type	Output Signal	Measuring range pressure
01APS-10R	Switch	20...300 Pa
01APS-10U	Switch	50...500 Pa
01APS-101	Switch	200...1000 Pa
01APS-104	Switch	500...2500 Pa

Technical Data

Electrical data	Electrical connection	Terminals for wire 0.5...1.5 mm²
	Cable entry	Cable Gland Cap Nut with strain relief Ø5...10 mm
Functional data	Output signal switch note	Contact current max.1.0 A (0.4) / AC 250 V
	Media	Air
Measuring data	Measured values	Differential pressure
	Measuring media	Air, non-combustible and non-aggressive gases
	Accuracy pressure	±15% (tolerance for upper and lower switching pressure)
	Overload range	10 kPa,
	Burst pressure	10 kPa
Materials	Housing	Bottom Part: PA 6.6 Top Cover: PS
Safety data	Non-operating temperature	-40...85 °C [-40...185 °F]
	EU Conformity	CE Marking
	Certification IEC/EN	IEC/EN 60730-1 and IEC/EN 60730-2-6
	Degree of protection IEC/EN	IP54
	Degree of protection NEMA/UL	NEMA 3
	Quality Standard	ISO 9001

Accessories

Scope of delivery	2m PVC Hose 2 x Duct connectors (plastic)

Wiring diagram

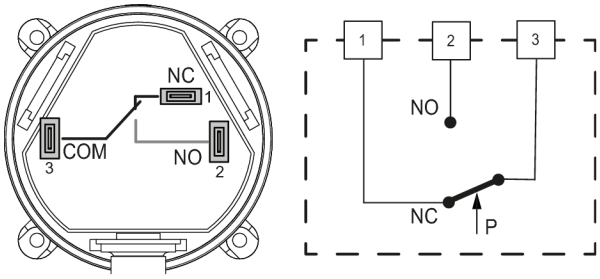
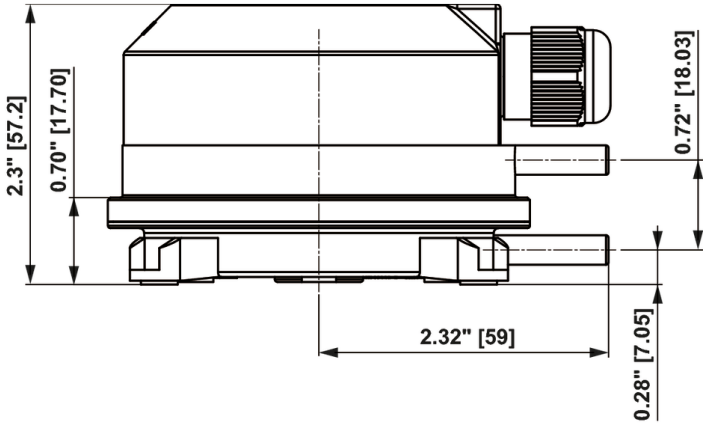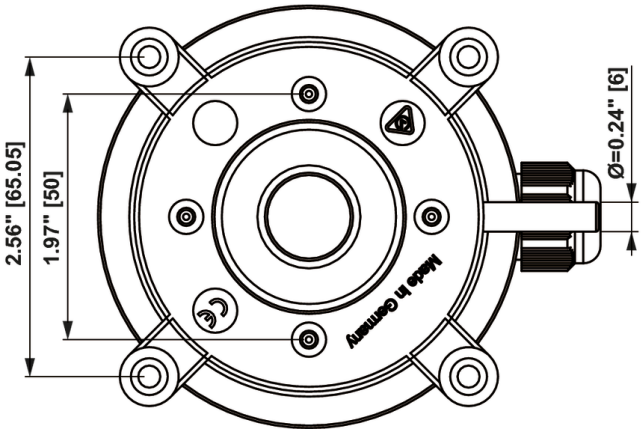
Dimensions