Frost Protection Thermostat

For measuring and detect low temperature. Also known as "Freeze Stats". For temperature monitoring on HVAC equipment that requires low-temperature cutout protection to prevent cooling coils from freezing. Manual or automatic reset versions available as well as various capillary lengths.

Type Overview

Type	Output signal temperature switch	Additional features	Probe length
01DTS-104	Changeover	Auto reset	3 m
01DTS-104X	Changeover	Manual reset	3 m
01DTS-105	Changeover	Auto reset	6 m
01DTS-105X	Changeover	Manual reset	6 m

Technical Data

Electrical data	Cable entry	Cable Gland Cap Nut with strain relief Ø6...8 mm
Functional data	Output signal switch note	single pole change over, switching load max. 10 A (DC 250 V)
	Media	Air
Measuring data	Measured values	Temperature
	Measuring range temperature	-10...12 °C
	Accuracy temperature	±0.5 °C
Materials	Cable gland	PA6, black
	Housing	Cover: Lexan, Belimo orange NCS S0580-Y6OR Bottom: Lexan, Belimo orange NCS S0580-Y6OR Seal: 0467 NBR70, black
Safety data	Ambient humidity	85% r.h., non-condensing
	Ambient Temperature	-35...70 °C [-30...160 °F]
	Protection class IEC/EN	III Protective extra-low voltage (PELV)
	EU Conformity	CE Marking
	Degree of protection IEC/EN	IP65
	Degree of protection NEMA/UL	NEMA 4
	Quality Standard	ISO 9001

Safety notes

The installation and assembly of electrical equipment should only be performed by authorized personnel.

The product should only be used for the intended application. Unauthorised modifications are prohibited! The product must not be used in relation with any equipment that in case of a failure may threaten, directly or indirectly, human health or life or result in danger to human beings, animals or assets. Ensure all power is disconnected before installing. Do not connect to live/operating equipment.

During installation, testing, servicing and troubleshooting of this product, it may be necessary to work with live electrical components. Have a qualified licensed electrician or other individual who has been properly trained in handling live electrical components perform these tasks. Failure to follow all electrical safety precautions when exposed to live electrical components could result in death or serious injury.

Please comply with
- Local laws, health & safety regulations, technical standards and regulations
- Condition of the device at the time of installation, to ensure safe installation
- This data sheet and installation manual

Accessories

Scope of delivery Installation kit

Wiring diagram

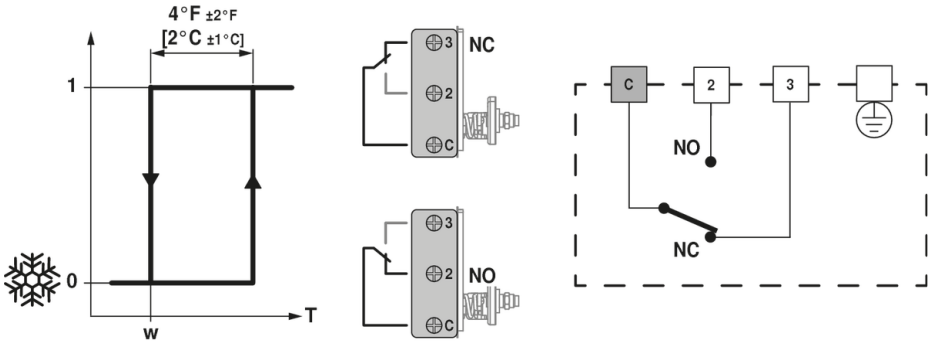

Set point range (factory setting 5 °C)
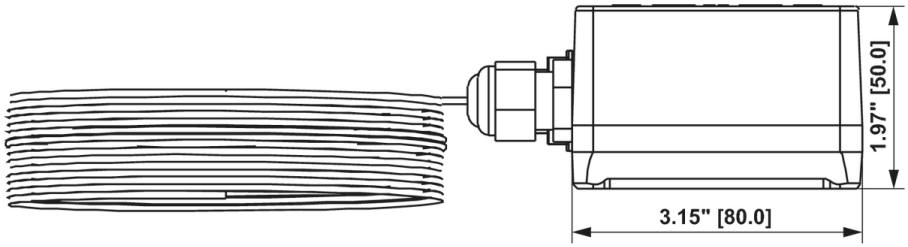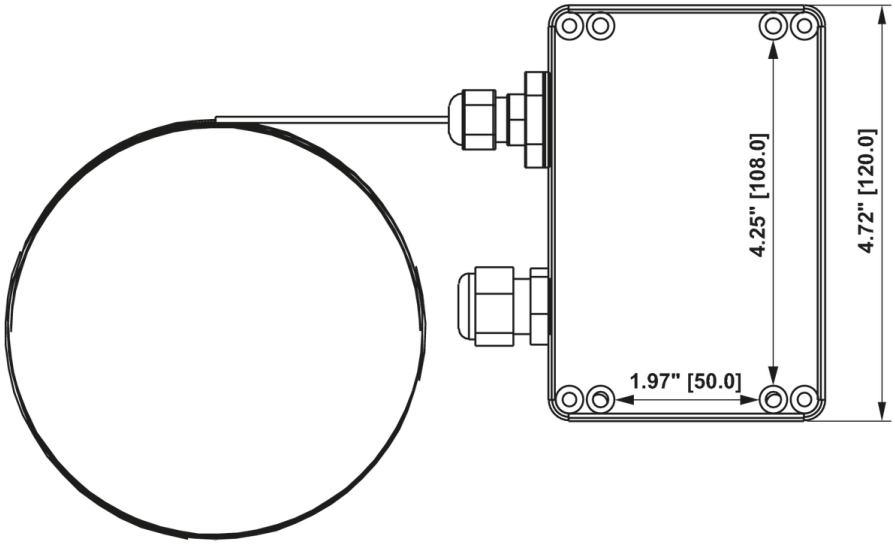
Dimensions