Duct Sensor Humidity / Temperature

For measuring the relative or absolute humidity and temperature in duct applications. The measured values are transmitted over Modbus. Instead of the humidity signal, the enthalpy or the dewpoint can be selected as an output signal. Nema 4X / IP65 rated enclosure.

Type Overview

Type	Output Signal	Output signal active temperature	Output signal active humidity
22DTH-15M	Modbus	DC 0...5 V, DC 0...10 V	DC 0...5 V, DC 0...10 V

Technical Data

Electrical data	Power Supply DC	15...24 V, ±10%, 0.7 W
	Power Supply AC	24 V, ±10%, 1.8 VA
	Electrical connection	Removable spring loaded terminal block max. 2.5 mm²
	Cable entry	Cable gland M20 2 x Ø6 mm, with strain relief 2 x Ø6 mm
Functional data	Sensor Technology	Polymer capacitive sensor with stainless steel wire mesh filter
	Communicative control	Modbus RTU (Details see separate document "Sensor Modbus Register")
	Output signal active note	Output DC 0...5/10 V selectable with switch
	Media	Air
Measuring data	Measured values	Temperature Humidity Dew point Enthalpies Absolute humidity
	Measuring range humidity	0...100% rH selectable via Modbus
	Measuring range temperature	-35...90 °C -31...194 °F selectable via Modbus
	Measuring range absolute humidity	0...80 g/m³ selectable via Modbus
	Measuring range enthalpy	0...85 kJ/kg selectable via Modbus
	Measuring range dew point	-20...80 °C selectable via Modbus
	Accuracy humidity	±2% between 10...90% r.H. @ 21 °C
	Accuracy temperature	±0.5 °C @ 25 °C
	Accuracy temperature	±0.5 °C @ 25 °C
	Operating condition air flow	max. 12 m/s
Materials	Cable gland	PA6, black
	Housing	Cover: Lexan, Belimo orange NCS S0580-Y6OR Bottom: Lexan, Belimo orange NCS S0580-Y6OR Seal: 0467 NBR70, black

Safety data

Ambient humidity	85% r.H., non-condensing
Ambient temperature	-20...50 °C [-5...122 °F]
Operating condition air flow	max. 12 m/s
Protection class IEC/EN	III Safety Extra-Low Voltage (SELV)
Protection class UL	UL Class 2 Supply
EU Conformity	CE Marking
Certification IEC/EN	IEC/EN 60730-1 and IEC/EN 60730-2-13
Certification UL	pending
Degree of protection IEC/EN	IP65
Degree of protection NEMA/UL	NEMA 4X
Quality Standard	ISO 9001
Weight	0.22 kg

Safety notes

The installation and assembly of electrical equipment should only be performed by authorized personnel.

The product should only be used for the intended application. Unauthorised modifications are prohibited! The product must not be used in relation with any equipment that in case of a failure may threaten, directly or indirectly, human health or life or result in danger to human beings, animals or assets. Ensure all power is disconnected before installing. Do not connect to live/operating equipment.

Please comply with
- Local laws, health & safety regulations, technical standards and regulations
- Condition of the device at the time of installation, to ensure safe installation
- This data sheet and installation manual

Remarks

Build-up of Self-Heating by Electrical Dissipative Power

Temperature sensors with electronic components always have a dissipative power which affects the temperature measurement of the ambient air. The dissipation in active temperature sensors shows a linear increase with rising operating voltage. This dissipative power should be taken into account when measuring temperature. In case of a fixed operating voltage (±0.2 V) this is normally done by adding or reducing a constant offset value. As Belimo transducers work with a variable operating voltage, only one operating voltage can be taken into consideration, for reasons of production engineering. Transducers 0...10 V / 4...20 mA have a standard setting at an operating voltage of DC 24 V. That means, that at this voltage, the expected measuring error of the output signal will be the least. For other operating voltages, the offset error will be increased by a changing power loss of the sensor electronics. If a re-calibration should become necessary later directly on the sensor, this can be done by means of a trimming potentiometer on the sensor board.

Application Notice for Humidity Sensors

Refrain from touching the sensitive humidity sensor/element. Touching the sensitive surface will void warranty.

For standard environmental conditions the manufacturing accuracy specified in the datasheet will be covered by the calibration warranty for two years. When exposed to harsh environmental conditions such as; high ambient temperature and/or high levels of humidity or presence of aggressive gases (i.e. chlorine, ozone, ammonia) the sensor element may be affected and readings may be outside specified accuracy. Replacement of deteriorated humidity sensor due to harsh environmental conditions are not subject of the general warranty.

Accessories

Scope of delivery

Mounting flange
Cable Gland Nut PG11, Ø6...10 mm
Strain relief Ø6...8 mm

Optional accessories

Description	Type
Mounting flange for duct humidity and CO_2 sensor	A-22D-A34
Replacement filter Stainless steel, wire mesh	A-22D-A06

Wiring diagram

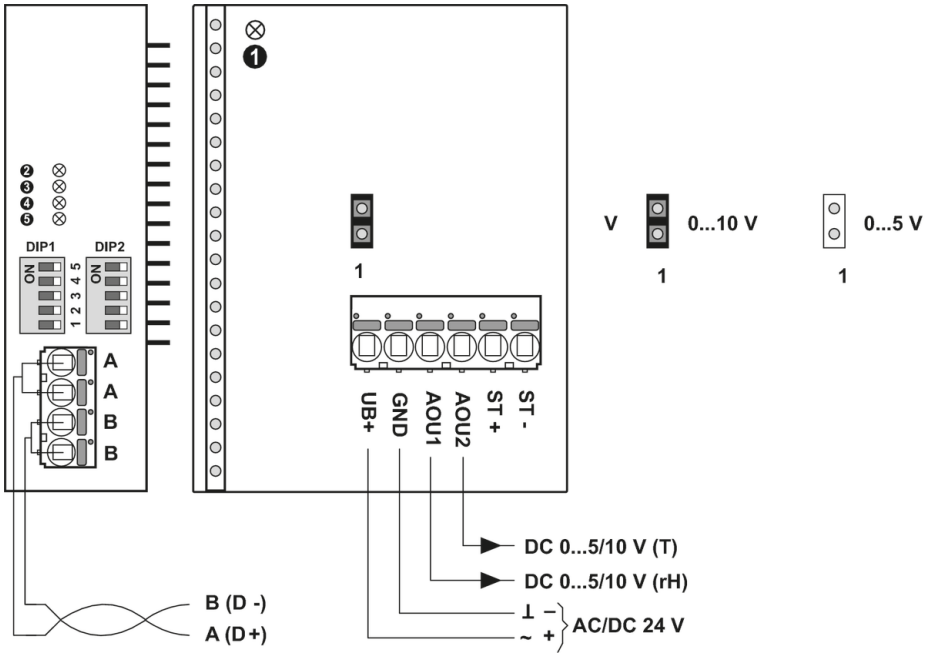

① and ⑤: Status LED
② red: Error
③ yellow: Tx
④ yellow: Rx

Detailed documentation

The separate document Sensor Modbus-Register informs about Modbus register, addressing, parity and bus termination (DIP1: address, DIP2: baud rate, parity, bus termination)

Notes Wiring RS485

Connection via safety isolating transformer.

Parallel connection of other actuators possible. Observe the performance data.

The wiring of the line for Modbus (RTU) / BACnet (MS/TP) is to be carried out in accordance with applicable RS485 regulations.

Modbus / BACnet: Supply and communication are not galvanically isolated. Connect earth signal of the devices with one another.

Dimensions

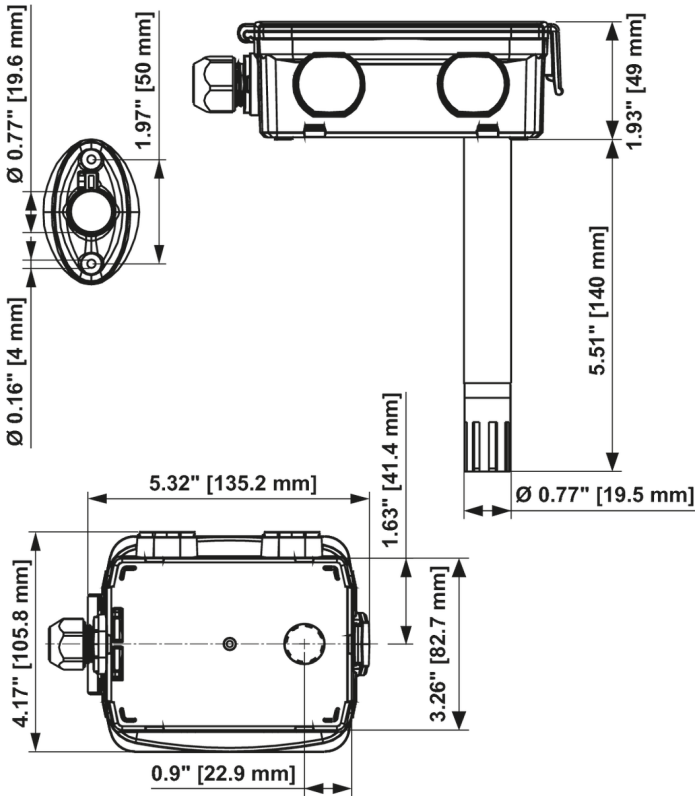
Ø 0.77" [19.6 mm]
1.97" [50 mm]
Ø 0.16" [4 mm]
1.93" [49 mm]
5.51" [140 mm]
Ø 0.77" [19.5 mm]
5.32" [135.2 mm]
1.63" [41.4 mm]
4.17" [105.8 mm]
3.26" [82.7 mm]
0.9" [22.9 mm]