Impianto osmosi inversa con pompa
Reverse osmosis system with pump
WTS *compact*

ITA Manuale d'uso

ENG User manual

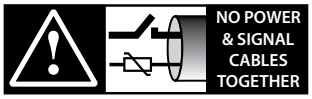

READ CAREFULLY IN THE TEXT!

Content

1. GENERAL FEATURES AND MODELS 7

1.1 Description of the unit....7
1.2 General principle of reverse osmosis....7
1.3 ROC operating principle....7
1.4 End of production of desalinated water....7
1.5 Part description....8
1.6 Technical specifications (for ROC025500N - ROC040500N - ROC0605000)....9
1.7 Electrical system conformity....9

2. INSTALLATION 10

2.1 Installation of cartridges....10
2.2 Diaphragm assembly....10
2.3 Water connections....10

3. STARTING THE SYSTEM 12

3.1 Checks to be performed whenever starting the system....12
3.2 Switching on and password entering....12
3.3 Language selection....12
3.4 First start....12
3.5 Checks and adjustment after start....12
3.6 System stopping....13
3.7 Summary of the start and adjustment step....13
3.8 List of available menus....14

4. TROUBLESHOOTING 15

5. MAINTENANCE 17

5.1 Routine maintenance....17
5.2 Overtime maintenance....17
5.3 Disposal....17
5.4 Instructions for emergency situations....17

6. REGULAR MAINTENANCE RECORDING FORM 18

7. SPARE PARTS 19

7.1 ROC025-ROC040 spare parts....19
7.2 ROC060 spare parts....20

8. WATER CIRCUIT 21

8.1 ROC025/040 water circuit....21
8.2 ROC060 water circuit....22

1. GENERAL FEATURES AND MODELS

1.1 Description of the unit

The reverse osmosis desalinators described in this manual are purpose-built for treating water used in technological processes. These units can resolve the problem of excessive mineral salts in the feed water, making such water drinkable. Reverse osmosis desalinators are made up of the following main components:

- micron filter;
- high pressure pump;
- desalination module (osmotic diaphragms);
- electrical control panel;
- expansion vessel.
- The list of the available codes is the following:

Carel code	Description
ROC025500N	Reverse osmosis system, 25 l/h, with 50 Hz pump and 15 l expansion vessel
ROC025600N	Reverse osmosis system, 25 l/h, with 60 Hz pump and 15 l expansion vessel
ROC040500N	Reverse osmosis system, 40 l/h, with 50 Hz pump and 15 l expansion vessel
ROC040600N	Reverse osmosis system, 40 l/h, with 60 Hz pump and 15 l expansion vessel
ROC0605000	Reverse osmosis system, 60 l/h, with 50 Hz pump and 15 l expansion vessel
ROC0606000	Reverse osmosis system, 60 l/h, with 60 Hz pump and 15 l expansion vessel

Tab. 1.a

WTS Compact models are available as well, without expansion vessel if the same vessel comes with the unit. Remember that the WTS Compact systems cannot operate without expansion vessel or associated return vessel

The list of available codes is the following:

Carel code	Description
ROC025500W	Reverse osmosis system, 25 l/h, with 50 Hz pump without expansion vessel
ROC025600W	Reverse osmosis system, 25 l/h, with 60 Hz pump without expansion vessel
ROC040500W	Reverse osmosis system, 40 l/h, with 50 Hz pump without expansion vessel
ROC040600W	Reverse osmosis system, 40 l/h, with 60 Hz pump without expansion vessel
ROC060500W	Reverse osmosis system, 60 l/h, with 50 Hz pump without expansion vessel
ROC060600W	Reverse osmosis system, 60 l/h, with 60 Hz pump without expansion vessel

Tab. 1.b

1.2 General principle of reverse osmosis

Osmosis is a natural process whereby diluted or lighter solutions spontaneously pass through semipermeable membranes into more concentrated solutions.

When a solution passes through a semipermeable membrane, the pressure on the side with the lower concentration decreases and at the same time the pressure of the more concentrated solution increases, until reaching a point of equilibrium, at which point the solution stops flowing. The pressure difference between the two solutions, in conditions of equilibrium, is called the "osmotic pressure".

Reverse osmosis, on the other hand, is a scientific process that reverses this natural process. It involves applying a pressure exceeding osmotic pressure to the more concentrated solution, so as to reverse the flow through the semipermeable membrane and separate the salts dissolved in the water.

This principle can be applied to water desalination, for both drinking and technological uses.

Reverse osmosis has several advantages:

- water desalination regardless of salt content;
- no chemicals that need to be drained after use, so no pollution problems;
- relatively low running costs compared to ion-exchange resin systems, above all with high salinity of the water being treated;
- easy operation.

1.3 ROC operating principle

The feed water enters the cartridge filter that guarantees dechlorination and final filtering at 5 µm. In this way, the required degree of limpidity for the water entering the permeators is guaranteed (the water corresponds to the project specifications). The supply pressure, during standard operation, must be at least 1.5 bar, to guarantee the correct pressure quantity at the pump inlet.

When the pressure exiting the cartridge filter is below 0.8 bar, the pressure switch PS1 sends a dedicated signal to the board, stopping the machine. Water is then returned from pump P1 so that the diaphragms can have the pressure required for the demineralization process. Pressure switch PS2 is adjusted so that it sends a signal should the permeator pressure exceed 10 bar.

Treated water flows out the system through the permeate pipe supplied as standard; the system starting and switching off are operated through the pipe and with the aid of pressure switches PS2 and PS3.

Example: on a 25 l/h machine (ROC025500N) of standard production, the following approximate values should be found: osmotised water production 25 l/h, discharge 60 l/h, pressure at the permeators 7-8 bar (PI1). These values are theoretical ones, because they can change when the feed water temperature varies and depending on its chemical-physical specifications. These values were taken into account for a recovery of 30% (TDS 250 ppm and feed water temperature 16°C); for calculating it, the following operation is required:

$$\text{RECOVERY (\%)} = \frac{\text{PERMEATE}}{\text{(PERMEATE+DISCHARGE)}} \times 100$$

To adjust the supply pressure to the permeators in the best way, you can use the by-pass inside the pump. The feed water temperature remarkably influences both productivity and quality of the permeate. As temperature increases, even only a few degrees, a higher productivity will be achieved (with an improved recovery) with a worse conductivity value.

1.4 End of production of desalinated water

The end of production of desalinated water is automatically managed by the electronic control through the pressure switches installed on the permeate piping. The max. pressure switch stops its operation when the pressure on the downstream circuit exceeds a given value (default 4.0 bar).

The pressure on the downstream circuit is kept through the expansion vessel (included in the ROC% code).

The min. pressure switch restarts the machine when the pressure on the downstream circuit drops below 2.0 bar (close to an emptying of the expansion vessel).

Note WTS Compact systems cannot operate if not coupled with the expansion vessel.

1.5 Part description

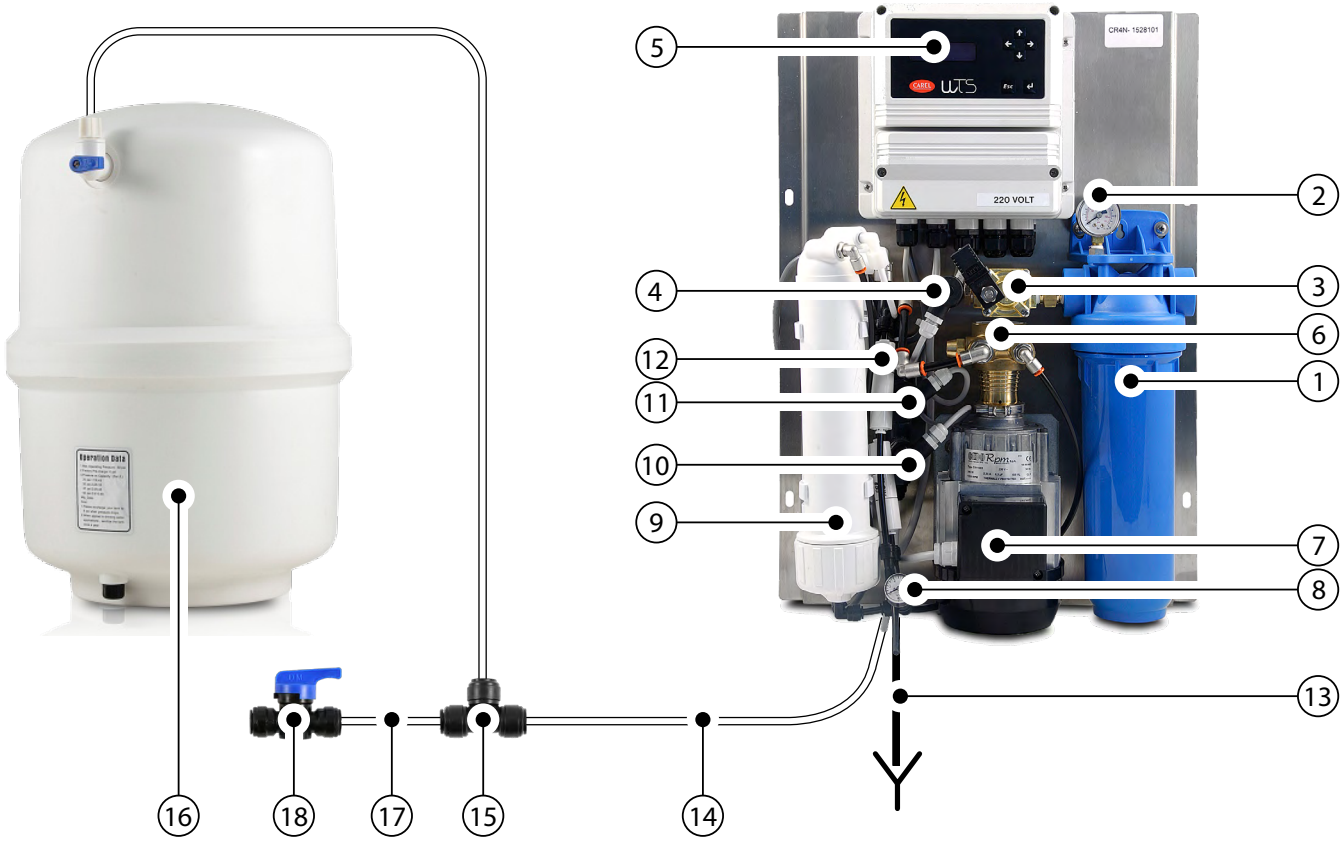

Rif.	Description	Re. circuit, chapter 9
1	Inlet filter	
2	System supply pressure gauge	
3	Charge solenoid valve	
4	Min. pressure switch for feed water	
5	Control electronic board	
6	Blade rotary pump, 150 l/h	
7	Motor	
8	Pump pressure gauge	
9	Osmotic diaphragm	
10	Start pressure switch	
11	Stop pressure switch	
12	Flow restrictor drain pipe for ROC025	
13	Drain pipeline (dia. 8 mm)	
14	Permeate pipeline (dia. 6 mm)	
15	T-piece for expansion vessel	

Rif.	Description	Re. circuit, chapter 9
16	Expansion vessel 15 l	
17	Permeate user line (dia. 10 mm)	
18	Check valve for user line (ball valve, dia. 10)	

In the ROC060 models present:

Rif.	Description	Re. circuit, chapter 9
19	Pump max. pressure switch	
20	Flushing solenoid valve	
21	Conductivity meter on the permeate line	

Overall dimensions and weight (LxHxW))

Model	ROC025500N	ROC040500N	ROC0605000	ROC025500W	ROC040500W	ROC060500W
With package (mm)	600x450x450	600x450x450	650x700x510			
Without package (mm)	420x580x200	420x580x200	600x650x270	420x580x200	420x580x200	600x650x270
Total weight (with package)	21 kg	22 kg	23 kg	21 kg	22 kg	23 kg

Tab. 1.c

Fig. 1.a

Fig. 1.b

Specifications of the feed water

Water to be treated must be clear and drinking type; it must comply with the parameters recommended by the 98/83/EC standard. The max. allowed concentration is the following:

Appearance	1000 µS
Turbidity	< 1 NTU
Iron	< 0,15 ppm
SDI (Silt Density Index)	< 3
Water temperature	5 ÷ 30 °C
Free chlorine	< 0,2 ppm
TDS (Total Dissolved Solids)	< 750 ppm
Water hardness	< 30 °Fr
SO4	< 75 ppm
SiO2	< 15 ppm
TOC (Total Organic Carbon)	< 3 mg/l
COD (Chemical Oxygen Demand)	< 10 mg/l

Tab. 1.d

Again depending on the characteristics of the water being treated, the membrane separates around 93 % of all dissolved salts and can also trap bacteria. Nonetheless, it is also worth checking the quality of the feed water, so the membrane will not be damaged over time by the action of microorganisms.

1.6 Technical specifications (for ROC025500N - ROC040500N - ROC0605000)

Feed water pressure	1,5...4	bar
Operating pressure	5 - 10	bar
Water temperature	5...30	°C
Room temperature	5...40	°C
Power supply	230V – 50Hz monofase/230V - 60Hz	
Storage and delivery conditions	-5...40 °C and sheltered from sun-light and excessive humidity	
Function conditions	5...40 °C and sheltered from sunlight and excessive humidity	

Tab.1.c

	ROC025500*	ROC040500*	ROC060500*
Minimum feed water flow-rate (l/h)	150 (referred to the pump)	150 (referred to the pump)	300 (referred to the pump)
Production (± 10%) - (l/h)	25	40	80
Drain (for 30 % recovery) - (l/h)	60	90	190
Number of membranes	1	2	2
Membrane model	2" x 15"	2" x 15"	2.8"x 15"
Installed power (W)	245	245	300
Feed water connection Ø	½" F	½" F	½" F
Permeate connection Ø	Dia. 10 mm pipe	Dia. 10 mm pipe	Dia. 10 mm pipe
Drain connection Ø	Dia. 8 mm pipe	Dia. 8 mm pipe	Dia. 8 mm pipe

Tab. 1.e

Note: the above data refer to clear water, without iron and free chlorine, at a temperature of 16°C, and TDS of 250 ppm.

1.7 Electrical system conformity

The reverse osmosis desalting kits comply with the following directives:

- Machinery Directive 2006/42/EC;
- Low voltage directive 2006/95/EC
- Electromagnetic compatibility directive (EMC) 2004/108/EC

2. INSTALLATION

The installation must be performed complying the regulations in force, according to the manufacturer's instructions and by skilled staff. The manufacturer cannot be held responsible for a wrong manufacturing. Electrical safety is obtained only when the equipment is connected to a plug having an efficient earthing system, equipped with magneto-thermal differential protection, as prescribed by the safety standards in force.

THE MANUFACTURER CANNOT BE HELD RESPONSIBLE FOR POSSIBLE DAMAGE CAUSED BY THE ABSENCE OF THE EARTHING SYSTEM OR NON-COMPLIANCE WITH THE STANDARDS IN FORCE.

Secure the system to a wall that can support the total weight with water (min. 25 kg). Use the supplied screws fitting them in the holes on the sides.

Caution: leave enough space at the front so that the operator can have space enough for adjustment and/or maintenance operations.

2.1 Installation of cartridges

Before fitting the cartridge in the vessel make sure that water supply is closed and there is no pressure, then disassembly the filter covers using the supplied wrench. Position the new cartridge as shown in the picture and reposition the cover in the proper way, tightening it by the wrench.

Fig. 2.a

Model ROC060 has two inlet filters: first position the green charcoal one (CBEC) and then the white micrometric one (CPP)

2.2 Diaphragm assembly

Before fitting the diaphragm in the vessel make sure that water supply is closed and that there is no pressure. Then move away the pipe from the connector and, if required, disconnect it from the quick couplings to create space enough for performing the operation. Undo the vessel cap and fit the diaphragm, paying attention to the fitting direction (black lip seal facing downwards). Then, make sure that the diaphragm is properly positioned and close the vessel cap.

2.3 Water connections

The reverse osmosis desalting kits can operate properly when the supply pressure ranges between min. 1.5 bar and max. 4 bar.
If pressure is below 1.5 bar, a pressurizing kit must be installed upstream of the equipment. On the other hand, if pressure exceeds 4 bar, a dedicated pressure reducer must be installed upstream of the equipment.

2.3.1 Connection of the system supply

Connect the system supply with a pipe having at least the same diameter as the one of the equipment (1/2" female GAS coupling). Provide for a cut-off valve upstream of the system.
Provide for a possible by-pass if water is to be supplied to the users even when the WTS Compact system is stopped.

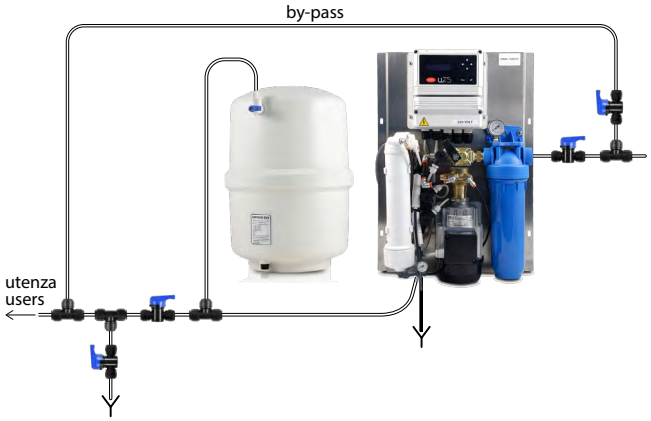

Fig. 2.b

2.3.2 Connection of the osmotised water line

Connect the pipe of generated water (dia. 6-mm white pipe) to the couplings of the pressure switches (dia. 6-mm quick coupling).

Fig. 2.c

2.3.3 Connection of the concentrate drain line

Connect the concentrate pipe (dia. 6-mm black pipe) coming from the flow reducer to a free drain (using the dia. 8 black pipe); the connector between the two pipes D.6 and D.8 is included in the standard supply (Fig. 2.d, 2.e).

The free drain must be earthed or lower than the same connection. The supplied connector (3/8" male thread) can be used with the coupling for a drain pipe, ø 40, from under the sink.

Fig. 2.d

2.3.4 Expansion vessel connection

Connect the permeate pipe (white, 6-mm dia. pipe) to the T-shaped connector (both included in the standard supply). Then, connect them to BV1 valve of the expansion vessel (Fig. 2.g, 2.h).

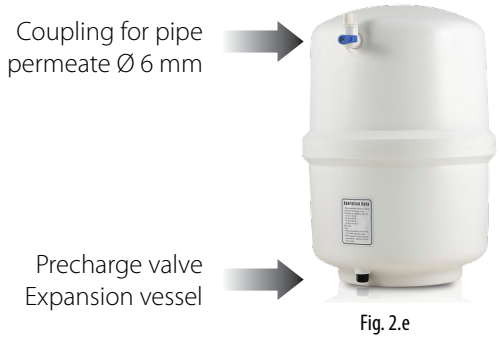

Fig. 2.e

Caution: it is advisable to install the expansion vessel close to the WTS Compact, within a range of 3-5 metres. The distance of the user depends on the diametre of the pipe used for the permeate and on the pressure required to the feed water. With a permeate pipe having 10 mm diameter and with a feed pressure request ≈ 1 bar, the recommended pressure should not exceed 20 metres.

2.3.5 Precharge of the expansion vessel

Precharge the expansion vessel using compressed air until reaching a pressure lower or equal to the min. pressure of the permeate pressure switch (~1.5 ÷ 1.8 bar). Charge the vessel through the valve located at the bottom (see arrow, fig. 2.f).

Caution:
precharge the
expansion vessel at 1.5...1.8 bar

Fig. 2.f

2.3.6 Return vessel connection

WTS Compact can also be installed with a return vessel equipped with pump. In this case, the authorisation to operation does not depend on pressure anymore (as it happened with the expansion vessel), rather it is determined by the high/low level signal sent by the float inside the vessel.

In case of installation of WTS compact with return vessel, comply with the following instructions:

- open the case of the electronic controller.
- disconnect the cables of the pressure switches from terminals 22-23 and 33-34 (factory fit wiring).
- connect the high level signal to terminals 22-23 and the low level signal to terminals 33-34 (Fig. 3A).
- enable the high level signal from menu "5 HIGH LEVEL - LIVELLO ALTO" (see paragraph 3.6).
- enable the low level signal from menu "4 LOW LEVEL - LIVELLO BASSO" (see paragraph 3.6).
- In these menus you can set the logic of the contact (N.C. or N.O.) and the delay of the signal (DEFAULT 00 sec.)

2.1 Electrical connections

Connect the system to the single phase line 230 V 50 Hz (or 60 Hz single phase) through the supplied socket. The user should not install any other wiring, unless for connecting an alarm output (to be connected to terminals 19 [N.O.]-20 [C]-21 [N.C.]) or an external remote consent (to be connected to terminals 37 [common] - 38 [input]). For completeness purposes, the diagram of all internal connections and available terminals follows:

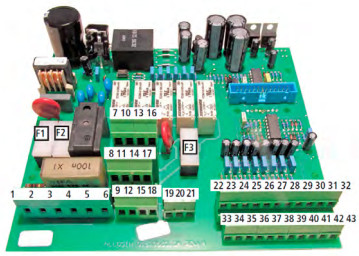

Fig. 2.g

Terminal	Description	ROC025 - ROC040	ROC060
1[L] - 2[ground] - 3[N]	Equipment supply input (230 V)	x	x
4[L] - 5[ground] - 6[N]	230 Vac output for pump supply	x	x
7[L] - 8[ground] - 9[N]	230 Vac output for metering pump	--	--
10[L] - 11[ground] - 12[N]	230 Vac for charge solenoid valve	x	x
13[L] - 14[ground] - 15[N]	230 Vac for drain solenoid valve	--	--
16[L] - 17[ground] - 18[N]	230 Vac for flushing solenoid valve	--	x
19[NO] - 20[C] - 21[NC]	Alarm output	optional	optional
22[C] - 23[IN]	Max. pressure switch for permeate line / high level	x	x
24[C] - 25[IN]	Input to high pressure switch for pump delivery	--	x
26[C] - 27[IN]	Pump cut-out switch input	--	--
28[C] - 29[IN]	Metering pump alarm input	--	--
30[shield] - 31 - 32	Probe for output permeate conductivity	--	--
33[C] - 34[IN]	Min. pressure switch for permeate line / low level	x	x
35[C] - 36[IN]	Low pressure switch input	x	x
37[C] - 38[IN]	Remote on/off input	optional	optional
39[C] - 40[IN]	Filter inlet from softener	--	--
41[shield] - 42 - 43	Input water conductivity probe	--	--

Tab. 2.a

3. STARTING THE SYSTEM

3.1 Checks to be performed whenever starting the system

Each machine is pre-calibrated and tested in the factory according to a suitable testing procedure. At the first starting of the equipment, the user should check as follows:

- tightness of the various connections;
- operation of the feed water circuit;
- electrical connections;

Now water can be supplied to the system by opening the ball valve suitably installed upstream. Wait until the complete filling and the wetting of the input filter. Check on the pressure gauge if the supply pressure is enough (1.5 bar).

3.2 Switching on and password entering

After electrical and hydraulic connections, switch the equipment on:

- press the ***Esc*** button at least for two seconds. The display will show "ATTESA ON" for a few seconds (the time used by the equipment to preset), then the current status is displayed.
- pressing the arrows ↑ and ↓ you can display (in read-only mode) information about the equipment operation (hour counter, conductivity, ...).
- press ↵ to access the configuration templates of the system.
- enter the PASSWORD. The default value is "0077". To enter the password, use the → and ← arrows to move the cursor, ↑ and ↓ to change the value. Press ↵ to confirm.
- In this way you enter the list of items that can be modified.

⚠ Caution: the parameters that can be modified were already set at commissioning, thus they do not need any change. Check that the parameter configuration complies with the default settings (as per paragraph 3.6). Comply with the information of the manual and change only the items listed here below.

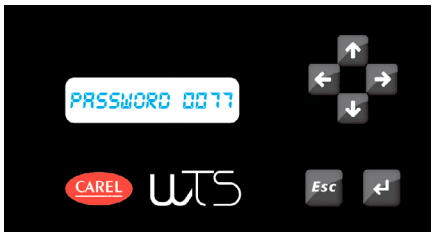

Fig. 3.a

3.3 Language selection

- With equipment on, press ↵ to access the configuration templates of the system.
- enter the password "0077" to enter the menu 01
- Using ↑ and ↓ arrows, scroll to the menu 16 "LINGUA". Press ↵ to enter.
- Scroll the available languages moving ↑ and ↓ and select among the available ones (ITALIANO, INGLESE, FRANCESE, TEDESCO, SPAGNOLO). Press ↵ to confirm.

3.4 First start

During the first start, the purpose is wetting the diagrams gradually, without submitting them to the work pressure (5-6 bar) before they are completely wet. Water must flow according to the network pressure for a few minutes through filters and diaphragms before the pump can be operated.

Water produced during this stage cannot be used. It is advisable to disconnect the permeate line and free drain all the water produced during start.

The procedure is the following:

1. Disconnect the permeate line and temporarily convey it to a free drain. Slightly open (one third) the feed cock (suitably installed upstream of the system), so that the water flow coming from the network decreases to minimum.
2. Switch the system on pressing the ***Esc*** button at least for two seconds. The display shows ATTESA ON for a few seconds, then it shows the main screen. Press ↵ to access the configuration templates of the system.
3. enter the password "0077" to enter the menu 01. Now the equipment movement is stopped.
4. Using ↑ and ↓ arrows, scroll to the menu 14 "TEST IMPIANTO - SYSTEM TEST". Press ↵ to enter.
5. In this menu, all components are deactivated. You can decide to activate/deactivate the individual components manually, using the following buttons of the controller:

↑	inlet solenoid valve
↓	drain solenoid valve (NOT PRESENT)
←	flushing solenoid valve (ONLY ON ROC060)
→	pump
↵	metering pump (NOT PRESENT)

6. Press ↑ to activate the drain solenoid valve: in this way, the N.C. valve is supplied and opens the circuit, letting water in only when the network pressure has been reached.

FOR ROC060 ONLY: press the ← arrow to operate the flushing valve: in this way, the N.C. valve is powered and opens the drain a bit more, getting an increased water flow and reducing the pressure difference between upstream and downstream of the diaphragms.

Note: please note that it is always advisable to let the diaphragms work at the lowest possible pressure (5...6 bar), above all during start, but also during the system standard operation. This ensures a longer life of the same diaphragms.

7. Leave the system in these conditions for at least 10 minutes.
8. Open again a little bit (two thirds) the cock upstream of the system, so that the water flow reaching the diaphragms increases. Leave the system in these conditions for at least 10 minutes.
9. Fully open the cock upstream of the system, leave the system in these conditions for 10 more minutes.
10. Check that the charge valve (and the flushing one if necessary) are still open. Now, operate the pump pressing the → button (still from inside the menu 14).
11. Immediately check the working pressure of the diaphragms, that can be read on the pressure gauge on the equipment, on the pump delivery side. Turn the adjustment screw opening the by-pass valve of the pump (anticlockwise direction), to reduce the pressure to about 2-3 bar. Leave the system in these conditions for 10 minutes.
12. Close the flushing valve if installed (pressing the ← again). Make the working pressure correspond to 5-6 bar, that is the standard operating pressure for a WTS Compact with new diaphragms.
13. Quit the menu 14 pressing ***Esc*** and go back to the main template of WTS Compact. Now the equipment is ready to work properly.

3.5 Checks and adjustment after start

After start, some checks for the correct operation of the WTS Compact system must be made.

1. Before connecting the permeate pipe to the expansion vessel, check that the permeate flow rate is correct and the conductivity ranges between the required values.

I

f the permeate flow rate is not enough it is advisable to close slightly the by-pass valve of the pump, to increase pressure to the permeators and get a higher flow rate of demineralised water (obviously with higher conductivity).
Should the permeate conductivity become too high and not satisfactory enough, it is advisable to open slightly the pump by-pass valve, to reduce pressure to the permeators and get water with a lower salt content (to the detriment of permeate flow rate produced). Please note that the percentage of salt rejection depends on inlet water quality and temperature and in no way can it be measured only on the conductivity value at the outlet. To adjust the pump by-pass, remember the following basic rules:

- clockwise tightening: close the by-pass, then increase the pressure to the diaphragms.
- anticlockwise loosening: open the by-pass, then decrease the pressure to the diaphragms.

2. Connect the permeate pipe to the expansion vessel, that now has no water. Please note that the vessel must have been precharged with compressed air, till getting a pressure of 1.5-1.8 bar. Let the WTS Compact operate until the vessel is full and thus until the pump stops automatically (according to the value on the max. pressure switch). Check that the stop pressure corresponds to about 4 bar.
3. Manually drain the expansion vessel opening one of the downstream cocks. Wait until the pump switches on again automatically, operated by the minimum pressure switch. Make sure that the WTS Compact starts again when the pressure on the permeate line is about 2 bar.

3.6 System stopping

The correct operation of the reverse osmosis system depends on the continuous production of demineralised water. For a stop shorter than 10 days, just leave the equipment powered both electrically and hydraulically, as it occasionally flushes the diaphragms (the default value is 30 seconds every 24 hours of inactivity). This parameter can be selected in menu 11H - FLUSHING - LAVAGGIO.

For stops longer than 10 days, up to max. 1-2 months, it is advisable to change the set of periodic flushing operations (menu 11H) to 15 minutes every 48 hours. To change the set of flushing operations proceed as follows:

- enter the list of items that can be modified;
- use the ↑ and ↓ arrows to select the item "11 LAVAGGIO";
- press ↵
- scroll through all the templates 11A, 11B, 11C pressing ↵, until template 11H is displayed. Pay attention in order not to change the default values of the scrolled templates.
- Template 11H is used to set the flushing of diaphragms cyclically for an x time every n hours. Set the max. duration of the flushing, expressed in minutes and seconds (max. value 99 minutes and 59 seconds) and the recurrence in hours (max. value 99 hours). Use the → and ← arrows to move the cursor to the selected digit; use the ↑ and ↓ arrows to enter the value. **Caution:** setting "00 h" means that the periodic flushing is disabled.
- pressing ↵ you return to the main menu confirming the modifications made.
- pressing ***Esc*** you scroll backwards the various templates, until reaching the main menu without confirming the modifications made.

For inactivity periods longer than 1-2 months, or when you decide to disconnect the osmosis system from the hydraulic/electric supply, the system maintenance procedure must be applied. This procedure implies draining the system completely and then filling it using a dedicated maintenance liquid. This activity must be exclusively performed by authorised technical staff, as agreed with Carel.

⚠ **Caution:** please note that during equipment inactivity the expansion or accumulation vessel must be drained. At the following start, perform a flushing procedure of the line and of the vessel, using demineralised water. It is recommended to drain and flush periodically the expansion vessel also after long periods of standard operation (about every two months).

3.7 Summary of the start and adjustment step

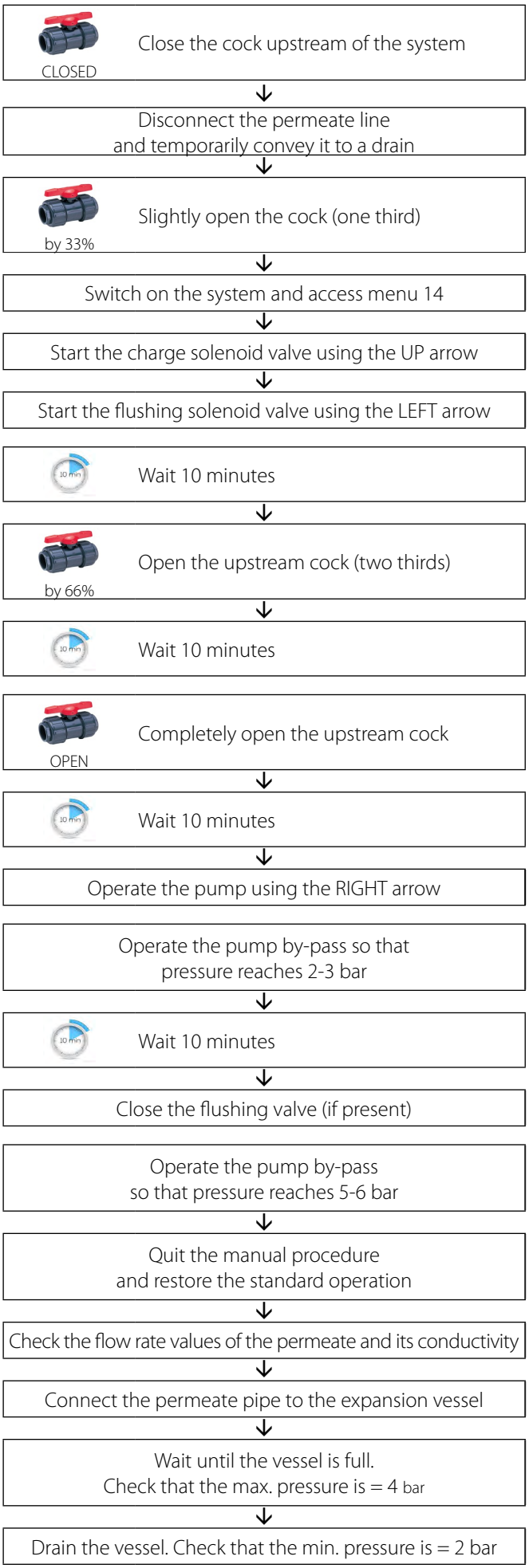

3.8 List of available menus

					ROC025 - ROC040	ROC060
1	INLET PROBE CALIBRATION	Conductivity probe on feed water	1a	Zero setting of the conductivity probe	not used (due to the absence of the conductivity meter at the inlet)	not used (due to the absence of the conductivity meter at the inlet)
			1b	Setting of the reading scale of the conductivity probe		
2	OUTLET PROBE CALIBRATION	Conductivity probe on permeate water	2a	Zero setting of the conductivity probe	not used (due to the absence of the conductivity meter at the outlet)	already calibrated in the factory
			2b	Setting of the reading scale of the conductivity probe		
3	OUTLET SET POINT	Check the conductivity value at the outlet. If conductivity exceeds the set threshold (3B) for a certain time (3D), it locks in DRIVER ALARM FOR SYSTEM STOPPING - IMPIANTO FERMO ALLARME CONDUC	3a	Enabled / disabled	not used (due to the absence of the conductivity meter on the equipment)	enabled
			3b	Conductivity set point at the outlet (from 0.0 to 99.9 µS)		80 µS
			3c	Reading at flushing end (locking): enabled / disabled		disabled
			3d	Delay time for alarm signal (from 0 min 0 sec to 9 min 59 sec)		5 min 00 sec
4	INLET SET POINT	Check on the conductivity value at the inlet.	4a	Enabled / disabled	disabled (due to the absence of the conductivity meter at the inlet)	disabled (due to the absence of the conductivity meter at the inlet)
5	LOW LEVEL	Min. pressure switch on permeate line	5a	Enabled / disabled	enabled	enabled
			5b	State of the high level contact (high pressure): N.C. / N.O.	N.C.	N.C.
			5c	Signal acquisition delay (from 0 to 59 sec)	0 sec	0 sec
6	HIGH LEVEL	Max. pressure switch on permeate line	6a	Enabled / disabled	enabled	enabled
			6b	State of the high level contact (high pressure): N.C. / N.O.	N.C.	N.C.
			6c	Signal acquisition delay (from 0 to 59 sec)	0 sec	0 sec
7	MINIMUM PRESSURE	Contact of the min. pressure switch for feed water	7a	Enabled / disabled	Enabled	Enabled
			7b	State of the contact with right pressure: N.C. / N.O.	N.C.	N.C.
			7c	Signal acquisition delay (from 0 to 59 sec)	05 sec	05 sec
			7d	Number of attempts before the alarm	4	4
			7e	Alarm during flushing as well: YES/NO	YES	YES
8	MAXIMUM PRESSURE	Check of the value of max. pressure downstream of the pump (from pressure switch calibrated at 12 bar)	8a	Enabled / disabled	disabled (due to the absence of the max. pressure switch)	enabled
			8b	State of the contact with right pressure: N.O. / N.C.	- - -	N.C.
			8c	Signal acquisition delay (from 0 to 59 sec)	00 sec	00 sec
9	PUMP CUT-OUT SWITCH	Protection of the pump motor from high temperature	9a	Enabled / disabled	disabled (due to the absence of temperature sensor on pump motor)	disabled (due to the absence of temperature sensor on pump motor)
			9b	State of the contact with right temperature: N.C. / N.O.		
			9c	Signal acquisition delay (from 0 to 59 sec)		
10	FILTER INLET	Forced system stop when the upstream softener makes salt regeneration	10a	Enabled / disabled	disabled (due to the absence of the upstream softener)	disabled (due to the absence of the upstream softener)
			10b	State of the contact with active softener: N.C. / N.O.		
			10c	Signal acquisition delay (from 0 to 59 sec)		
11	FLUSHING	Flushing at the start or after switching off the system, before or after each production cycle	11a	Enabled / disabled	disabled	enabled
			11b	Flushing with pump: YES / NO	no	yes
			11c	Flushing with charge solenoid valve open: YES / NO	yes	yes
			11d	Flushing at the beginning of production cycle: enabled / disabled	disabled	enabled
			11e	Duration of the flushing from production start (from 0 to 99 min 59 sec)	00 min 00 sec	00 min 20 sec
			11f	Flushing at the end of production cycle: enabled / disabled	disabled	enabled
			11g	Duration of the flushing from production end (from 0 to 99 min 59 sec)	00 min 00 sec	00 min 15 sec
	PERIODIC FLUSHING	Flushing of the diaphragms in a cyclical way, every "n" hours and for a variable "x" duration	11h	PERIODIC FLUSHING OF DIAPHRAGMS: duration of the flushing (from 00 min 00 sec to 99 min 59 sec) and frequency of the flushing (from 00 h to 99 h)	00 min 30 sec every 24 h	01 min 00 sec every 08 h
12	ALARM	Output of the alarm signal with connection to an external device	12a	Enabled / disabled	disabled	disabled
			12b	State of the contact with no alarm: N.C. / N.O.	- - -	- - -
13	RESET	Reset of the counter for the work hours accumulated by the system	13a	Reset of the hour counter: YES / NO		
			13b	Reset of the time interval before next maintenance: YES / NO		
14	SYSTEM TEST	Manual procedure to be activated individually for each single component: to be used during the FIRST START of the system	UP	Inlet solenoid valve: enabled / disabled		
			DOWN	Discharge solenoid valve: enabled / disabled	absent	absent
			RIGHT	Flushing solenoid valve: enabled / disabled	absent	
			LEFT	Pump: enabled / disabled		
			ENT	Metering pump: enabled / disabled	absent	absent
15	ALARM TEST	Check if the alarm output is operating	UP	Press the arrow up to manually activate the alarm		
16	LANGUAGE	Select the display language		Italian / English / French / German / Spanish	Italian	Italian
17	PASSWORD	Entering a new password		Key in the new password twice to confirm the choice	0077	0077
18	MAINTENANCE	Maintenance warning interval	18a	Maintenance warning: enabled / disabled	enabled	enabled
			18b	Interval before maintenance warning (from 0 to 19999 h)	240 h	240 h
19	METERING PUMP	Locking alarm signal from metering pump	19a	Input for metering pump alarm: enabled / disabled	not used (there is no metering pump)	not used (there is no metering pump)
			19b	State of the contact with no alarm: N.C. / N.O.		
			19c	Signal acquisition delay (from 0 to 59 sec)		
20	STAND-BY	Input for stand-by (remote on-off)	20a	Remote input: enabled / disabled	disabled	disabled
			20b	State of the contact with no external signal: N.C. / N.O.	- - -	- - -
			20c	Signal acquisition delay (from 0 to 59 sec)	- - -	- - -
21	PUMP DELAY	Pump delay, recommended when a return pump is installed upstream of the system	21a	Start delay of the pump for the reverse osmosis system after opening the charge solenoid valve (from 0 to 999 sec)	000 sec	000 sec

Tab. 3.a

4. TROUBLESHOOTING

Alarm	Cause	Remedy
STOPPED SYSTEM - HIGH PRESSURE	The maximum pressure switch downstream of the pump measures a pressure higher than the set value (12 bar) (ONLY FOR ROC060)	- check that the pressure switch is calibrated correctly and that the alarm actually occurs when the set pressure is exceeded (12 bar, readable from the manometer downstream of the pump)
		- act on the pump by-pass to reduce the pressure downstream of the pump (suggested value between 5 and 10 bar)
		- use the menu 8C to set a specific delay in reading the maximum pressure switch (5 seconds)
		- If the problem persists, check that the permeate pipe is not obstructed and that the produced flow is close to the nominal value.
STOPPED SYSTEM - LOW PRESSURE	The inlet minimum pressure switch measures a feed water pressure lower than the set value (0.8 bar) for a certain number of consecutive attempts	- check that the water supply pipe upstream of the system has a suitable diameter (at least 1/2")
		- while reading the inlet pressure on the manometer, check that the supply water pressure is guaranteed (both static pressure with WTS off and dynamic pressure with WTS pump on).
		- if there is a pressurisation pump upstream of the WTS, check that it operates correctly. If necessary, delay the WTS pump switching-on (menu 21A) of a few seconds to allow the pressurisation pump to activate.
		- check the conditions of the inlet filters and the pressure loss caused by them (by means of a pressure gauge upstream and one downstream of the filters). If necessary, replace the filter cartridges and clean the inside of the vessels.
		- check that the pressure switch is calibrated correctly and that the alarm actually occurs below the set pressure (0.8 bar) Check whether the NC/NO logic of the contact is implemented correctly (menu 7B, with reference to terminals 35-36). If necessary, carry out a new calibration of the pressure switch.
CHECK HI-LEVEL LOW-LEVEL CONTACTS	The contact opening/closing sequence for operation authorisation (in the case of vessel filling/draining) is incorrect	- the authorisation to START is given by a minimum pressure switch (when the pressure drops below 2 bar) or by a float (which indicates the low level). The signal is controlled by terminals 33-34 of the electronic board. Check that the authorisation to START activates the signal (check that the signal is enabled in menu 5A; use a tester to measure the terminal continuity at its ends) and that the signal logic (NC/NO) complies with the one set in the display (menu 5B)
		- STOP is given by a maximum pressure switch (when the pressure reaches 4 bar) or by a float (which indicates the high level). The signal is controlled by terminals 22-23 of the electronic board. Check that the authorisation to STOP activates the signal (check that the signal is enabled in menu 6A; use a tester to measure the terminal continuity at its ends) and that the signal logic (NC/NO) complies with the one set in the display (menu 6B)
STOPPED SYSTEM - CONDUCTIVITY ALARM	During the production phase, the conductivity exceeds the set threshold for a certain period of time (ONLY FOR ROC060)	- Carry out an independent measurement of the produced water conductivity (for example by means of an external conductivity meter)
		- check that the conductivity meter on the machine operates correctly; if necessary, clean the head and/or recalibrate the measuring instrument (see point 5.8)
		- check the conditions of the membranes and monitor their performance deterioration over time (see point 5.9)
		- check the supply water quality: the output conductivity always depends on the quality of the supply water.
		- correct the threshold value set in menu 3B if it is too low
		- basically, the first water produced after a period of inactivity will always have a higher conductivity. It is advisable to increase the alarm delay by a time that can be set in menu 3D
		- if you want to ignore the alarm and you do not want to stop the normal operation of the WTS, disable the Output Set Point in menu 3A
MAINTAIN THE SYSTEM	The time set for the scheduled maintenance has expired.	- reset the scheduled maintenance timer in screen 13B to the value set in menu 18B
		- enable or disable the scheduled maintenance warning in screen 18A; use screen 18B to set the time before maintenance request

Tab. 4.a

The following problems can be found and solved with the following procedures:

Problem	Solution
The flow rate of the permeate is not the rated one. The demineralised water quantity from the permeate line is not enough.	- check that the feed flow rate is guaranteed and that there are not obstructions on the charge line. Check the conditions of the inlet filters.
	- check that the pressure generated downstream of the pump and reaching the diaphragms corresponds at least to 5-7 bar. If necessary, close the by-pass tightening the screw (clockwise). Check that there are no leaks from junctions or pipelines.
	- Check the drain line: the installed flow restrictor must generate a proper charge loss for generating pressure to the diaphragms and thus for producing permeate. Check that the relationship between drain water and permeate is about unit (0.8 ÷ 1.2). Replace the flow restrictor (if necessary).
	- check that the diaphragms are not clogged and refer to the periodic maintenance sheets to check their conditions. In standard conditions, the diaphragms have a gradual performance loss over time. If necessary, replace the diaphragms.
The conductivity of permeate is too high.	- first of all, measure the conductivity of the feed water, because conductivity value at the outlet can always be compared with the inlet one (90%-95% of salty rejection with new diaphragms).
	- conductivity is the most significant value but there are others to be taken into account: the reduction of TDS is extremely important for evaluating the good conditions of the diagrams and the good operation of the system.
	- when the operating pressure of the diaphragms is higher, a higher flow rate of permeate is generated, with a higher conductivity value. - check that the pressure generated downstream of the pump and reaching the diaphragms corresponds approx. to 5-7 bar. If necessary, open the by-pass loosening the screw (anticlockwise).
	- check that the diaphragms are not clogged and refer to the periodic maintenance sheets to check their conditions. In standard conditions, the diaphragms have a gradual performance loss over time. If necessary, replace the diaphragms.
The conductivity meter of the WTS Compact is not calibrated (on ROC060 only).	- remove the conductivity meter from its housing and clean the heads. Perform the measurement again.
	- check the non-calibration of the conductivity meter on the equipment: to do so, you need to measure the conductivity of the permeate with a second independent device. Make sure that the calibration of the second conductivity meter is certified.
	- the conductivity meter on the equipment is calibrated following the standard factory procedure and this operation is not easy to repeat. For a new calibration, proceed as follows: - arrange a buffer solution with known salinity (ranging between 0 and 100 µS), measured through an external device - remove the conductivity meter from its housing and keep it hanging, still connected to the power line - enter the menu 2A ZERO CALIB - press ENTER to confirm the value displayed in the "lettura" box: in this way, the zero is calibrated - If the "lettura" box displays an irregular value, the display shows "ZERO cal errata"; press ESC to quit without saving, then clean again the heads of the conductivity meter, or replace it. - enter the menu 2B SLOPE CALIB - dip the conductivity meter in the buffer solution with known conductivity - wait until the "lettura" value stabilises - press ENTER to save the measurement or press ESC to go back to the previous menu and quit. - if the conductivity meter measures a conductivity value of the buffer solution extremely different from the actual one (known), replace the conductivity meter.
The WTS Compact system never starts or never stops.	- the logic of the permeate pressure switches might have been entered in a wrong way: check on the display that status N.C. corresponds to menus 5b and 6b.
	- the pressure switch could be not calibrated. Check the calibration pressure by monitoring the behaviour of the WTS and of the pressure switches during the vessel charging (check which is the pressure value that closes the contact) and during the manual draining of the vessel (check at what pressure value the pressure switch opens the contact).
	- check the operation of the pressure switches, possibly disconnecting the cables at the ends of the pressure switch, and try to enable/disable the WTS opening the contact. If either pressure switch features an irregular operation, replace the pressure switches.
	Note Please note that the max. pressure switch for the permeate is calibrated at 4 bar and is placed in the high position. The min. pressure switch for the permeate is calibrated at 2 bar and is placed in the low position.
Password 0077 does not work.	- Try to enter "0000".
	- If this password as well does not work, make a "RESET PASSWORD" procedure, restoring the default value "0000". Proceed as follows: - disconnect power supply from the equipment - simultaneously press the buttons "UP" and "ESC" and reconnect power supply.
	- For a few seconds the display shows "RESET PASSWORD" before going back to standard operation. The stored password now is "0000".
	- To configure a new password, access the menu 17 of the electronic controller.

Tab. 4.b

Please note that the logics of pressure switches on the equipment is the following:

Pressure switch	Logic	Calibration	Operating example	
Pump min. flow rate	N.O.	1 bar	>1 bar = closes	equipment ON
			<1 bar = opens	equipment OFF
Permeate min. flow rate	N.C.	2 bar	>2 bar = opens	equipment OFF
			<2 bar = closes	equipment ON
Permeate max. flow rate	N.C.	4 bar	>4 bar = opens	equipment OFF
			<4 bar = closes	equipment ON

Tab. 4.c

5. MAINTENANCE

For a good operation of the reverse osmosis system, the working conditions must be constantly monitored, in particular:
- check that the concentrate of chlorine concentration in the feed water is not too high (max. 0.2 ppm);
- check that hardness and conductivity of the feed water range between the limit values (indicated in par. 7.1);
- check the inlet pressure and the charge loss due to the filter;
- check the working pressure of the diaphragms: it should range between the limit values (max. 10 bar);
- check the conditions of pipes and connections, making sure that there are no water leaks.
- check the permeate water flow and the drain water flow; monitor the recovery value;
- check the conductivity of the feed water and that of the produced water;
- check the regular operation of the system (IMPORTANT);
- avoid any prolonged stagnation of water in the expansion vessel, drain, rinse and then refill it at regular intervals;
- keep the equipment and the surrounding area properly clean

For all these operation, a monthly frequency is recommended.
It is recommended to note down the operations performed on a copy of the model shown in chapter 7.

5.1 Routine maintenance

The routine maintenance is extremely important: otherwise, the osmosis system operation might be impaired. In particular, a regular draw by the user should be ensured, with a suitable frequency of flushing steps, so that the WTS system is used frequently.

5.1.1 Replacement of the inlet filters

The inlet filter unit is formed by a single CBC charcoal filter in the ROC025500N and ROC040500N units.
On the other hand, the ROC0605000 model is formed by two filters with serial connection; the first one is the CBC charcoal filter, while the second one is a CPP micrometric filter.
These filters need a continuous monitoring and replacement, when required.

Replacement of the CBC charcoal filter: the CBC charcoal filter is used to abate the content of chlorine in the feed water. The presence of chlorine in water might damage the diaphragms beyond repair. The charcoal filter has a chemical operation, combining and absorbing all chlorine molecules. Performance decay over time is normal. The CBC cartridge should be replaced:
- every four months if the content of chlorine in feed water is lower that 0.1 ppm.
- every two months if the content of chlorine in feed water ranges between 0.1 and 0.2 ppm.

Replacement of the 5 µm CPP micrometric filter: the CPP micrometric filter retains the foreign bodies over 5 µm. The filter has a mechanical operation, making feed water pass through a filtering mesh. It is normal for the filter to get clogged over time, making less water pass and decreasing its pressure.
The replacement of the CPP cartridge is necessary when the system supply pressure (after passing through the inlet cartridge filters) is lower than 1 bar during standard operation (pressure shown in the pressure gauge PI01).

5.1.2 Reset of the hour counter for the maintenance interval

To display the production hours of the system, from the home screen showing the system status, press ARROW DOWN, sequentially scrolling through the templates, until reading the working hours of the system (where one working hour corresponds to a decimal) and the count-down of the hours before the next scheduled maintenance operation, displayed by default every 240 operating hours (maintenance interval that can be set through the menu "18B MAINTENANCE - MANUTENZIONE").
The reset of the system hour counter (menu "13A HOUR COUNTER RES - RES CONTAORE") is not recommended, unless exceptional circumstances occur (e.g. replacement of the diaphragms).
The reset of the hour counter for maintenance (menu "13B RES MANUT - MAINTENANCE RES.") must be performed after the equipment has signalled the maintenance alarm, meaning that an intervention on the system is required.

The reset of the hour counter can be managed through the user interface, in menu "13 RESET":
- The display shows the first template "13A HOUR COUNTER RESET - RES CONTAORE".
- The cursor default setting is NO (press OK to confirm).
- Press ARROW UP or DOWN, to change the setting to YES-NO.
- Press "OK" to confirm the selection.
- Pressing again, the second template "13B RES MANUT - MAINTENANCE RES" is displayed
- The cursor default setting is NO (press OK to confirm).
- Press ARROW UP or DOWN, to change the setting to YES-NO.
- Press "OK" to confirm the selection.

5.2 Overtime maintenance

Overtime maintenance concerns repair or replacement of one or more components: usually this type of intervention is not required, unless exceptional circumstances occur.

5.2.1 Replacement of diaphragms

- Diaphragms have a natural decay over time, in particular:
- yearly decrease of produced permeate: 7%
- yearly increase of conductivity of the produced permeate: 10%
- Diaphragms, after a longer or shorter period, depending on the features and the volume of treated water, get clogged, thus reducing their efficiency.
- The decay of diaphragm performance can depend on the following main factors:
- clogging due to precipitation of iron or sulphate and calcium carbonate
- biological clogging
- long interval between CBC charcoal filter replacement (resulting in corrosion due to the presence of chlorine in the feed water)
- The replacement is required when the following main parameters in the system change (recorded at the same temperature of the feed water):
- decrease of the produced water flow rate until reaching an insufficient value for the application connected downstream of the osmosis system.
- too high increase of the conductivity of produced water until reaching a too high value for the application connected downstream of the system.

5.3 Disposal

Should you decide not to use the desalting kit anymore, it must be dismantled. This operation must be carried out according to the regulations in force and with separate collection of the different materials inside (rubber, plastic, polyethylene, fibreglass, PVC, electronic circuits, etc.).

5.4 Instructions for emergency situations

In case of fire, use powder fire extinguishers in compliance with the regulations in force. Never use liquid fire extinguishers.
Pay attention to combustion gases, as they can be extremely toxic.

6. REGULAR MAINTENANCE RECORDING FORM

Model: WTS Compact

Serial number

Date of first start-up

Regular maintenance recording form (to be filled in with a monthly interval)

Values to be measured on the spot

Conductivity at the inlet

Conductivity at the outlet

Pump working pressure
(default 5...10 bar)

Decay quantity

Drain quantity

Recovery value
permeate / (permeate+drain) = about 50%

Expansion vessel

Stop pressure (default 4 bar)

Start pressure (default 2 bar)

Air precharge pressure (default 1.8 bar)

To measure the precharge pressure, it is advisable to drain the vessel and use a pressure gauge to measure the air residual pressure in the same vessel. It is advisable to perform this operation every month, to guarantee the hygiene of the stored water.

Spare parts

Micrometric filter

Feed water pressure

Water pressure downstream of the filter

If pressure drop > 1 bar
IMMEDIATELY REPLACE THE FILTER or REPLACE EVERY YEAR

Date of last filter replacement:

Micrometric filter

Quantity of free chlorine in the feed water

- ☐ If < 0.02 replacement every 4 months
- ☐ If < 0.04 replacement every 3 months
- ☐ If > 0.04 replacement every 2 months

Date of last filter replacement:

Osmotic diaphragm

Replacement recommended when the conductivity value of the permeate or the permeate flow rate value is not satisfactory any more

Regular replacement recommended once every two years.

Date of last diaphragm replacement:

UV light (optional)

The UV light should be replaced every 10000 hours of operation (about once a year).
Date of last UV light replacement:

The removal and cleaning of quartz is recommended approximately every 6 months

Date of last UV/quartz light cleaning:

Various remarks

N.

Date

Person in charge

Signature

7. SPARE PARTS

7.1 ROC025-ROC040 spare parts

Where necessary, the parts of the desalinator must only be replaced by qualified personnel, when the appliance is off and depressurised. In all cases, contact the supplier or the manufacturer directly.

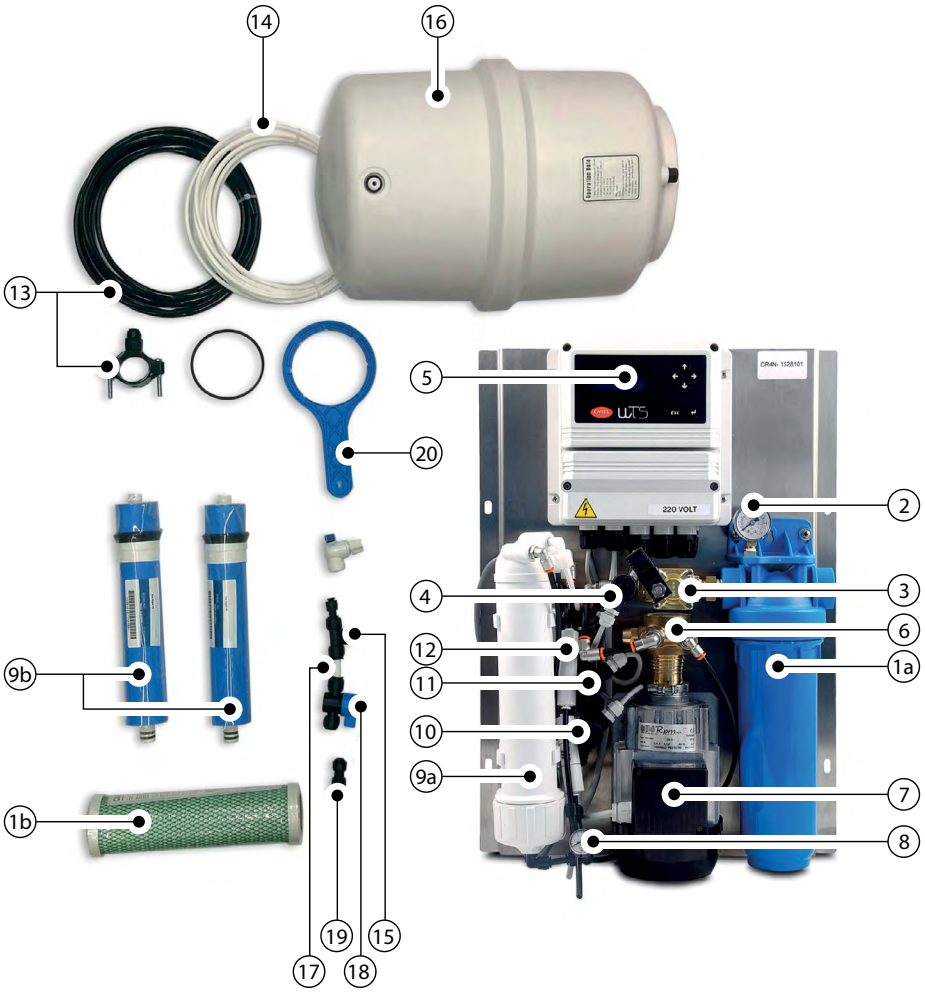

Fig. 7.a

Rif. n°	Code	Description
1a	ROKC00HOU1	Single BLUE container for water inlet filter, 10" - 1/2" connection
1b	ROKC00FLT2	Cartridge CBEC 10" – 5 micron
2	- - -	Pressure gauge 0-6 bar – radial connection 1/8"
3	ROKL00IV12	Water inlet solenoid valve with coil 230 V – 1/2"
4	ROKC00PSLP	N.O. pump min. pressure switch, made of brass, calibrated at 1 bar - 1/4"
5	ROKC00EP01	Preset electronic control board
6	ROKC00PUMP	Pump 150 l/h
7	ROKC00MOT5	Single phase, 230 V, 50 Hz, 245 W motor
	ROKC00MOT6	Single phase, 230 V, 60 Hz, 245 W motor
8	ROKC00MAK1	Kit of pressure gauges for permeate, dia. 25, installed on T-shaped quick coupling (for dia. 6 pipe)
9a	ROKC00VESS	Vessel for diaphragm 2" (there are two on ROC040 models)
9b	ROKC00MEMB	Osmotic diaphragm (there are two on ROC040 models)
10	ROKL00PSLL	Permeate N.C. min. pressure switch, calibrated at 2 bar
11	ROKL00PSHL	Permeate N.C. max. pressure switch, calibrated at 4 bar
	ROKC00PSK0	Kit of min./max. pressure switches installed on PVC mount
12	ROKC00FR25	Drain adjuster 800 for ROC025
	ROKC00FR40	Drain adjuster 2 x 600 for ROC040 (required quantity: 2)
13	ROKC00BR08	Black pipe, dia. 8 mm for water drain with bracket connector under the sink (L = 3 m)
14	ROKC00P064	PE white pipe, dia. 6 - whole coil L = 100 m
15	ROKC00TEE1	T-shaped connector with quick couplings for dia. 10 pipe
	ROKC00RD10	Reduction connection, dia. 10-6 with quick coupling
16	ROKC00KTVE	Kit of additional expansion vessel, capacity 15 l + pipe and connectors
	ROKC00VE15	Expansion vessel (spare part without pipes and connectors)
17	ROKC00P107	PE white pipe, dia. 10, for permeate line - whole coil L = 150 m
18	ROKC00VALS	Quick coupling ball valve for dia. 10 pipe
19	- - -	Reduction connection, dia. 10-8 with quick coupling for drain pipe
20	ROKC00WREN	Spanner for 10" filter tightening

Tab. 7.a

7.2 ROC060% spare parts

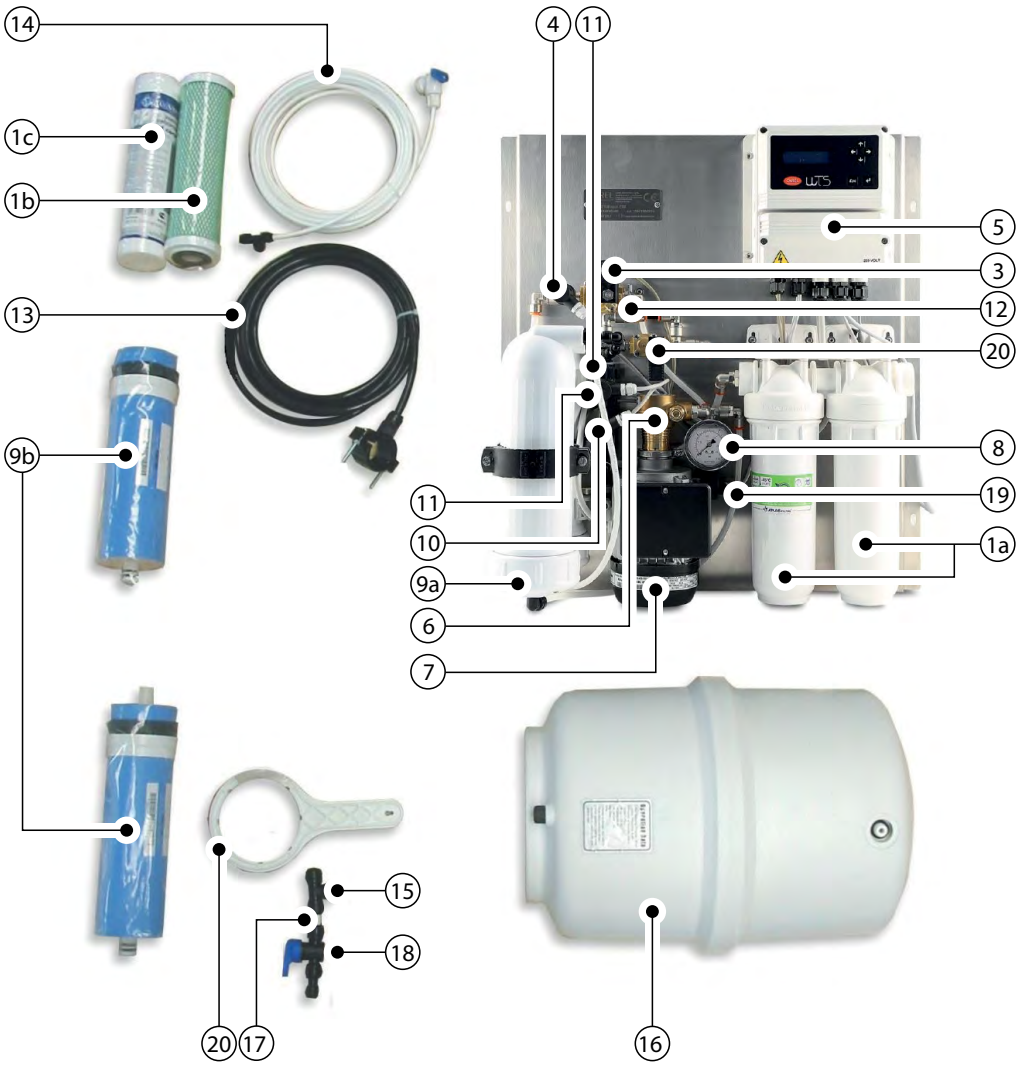

Fig. 7.b

Rif. n°	Code	Description
1a	ROKL00HOU1	Double WHITE container for water inlet filter, 10" - 1/2" connection
1b	ROKC00FLT1	Spare filter cartridge CBEC 10'' – 10 micron
1c	ROKC00FLT3	Spare filter cartridge CPP 10'' – 5 micron
3	ROKL00IV12	Water inlet solenoid valve with coil 230 V – 1/2"
4	ROKC00PSLP	N.O. pump min. pressure switch, made of brass, calibrated at 1 bar - 1/4''
5	ROKC00EP01	Preset electronic control board
6	ROKC00PU00	Pump 300 l/h
7	ROKC00MO65	Single phase, 220 V, 50 Hz, 300 W motor
	ROKC00MO66	Single phase, 220 V, 60 Hz, 300 W motor
8	ROKL00MA16	Stainless steel, dia. 63 pressure gauge, 0-16 bar, with brass connector - 1/4" rear connection
9a	ROKC00VS28	Vessel for diaphragm 2.8"
9b	ROKL00MEMB	Diaphragm 2.8"
10	ROKL00PSLL	Permeate N.C. min. pressure switch, calibrated at 2 bar
11	ROKL00PSHL	Permeate N.C. max. pressure switch, calibrated at 4 bar
	ROKC00PSK0	Kit of min./max. pressure switches installed on PVC mount
12	- - -	Drain adjuster with check valve
13	ROKC00BR08	Black pipe, dia. 8 mm for water drain with bracket connector under the sink (L = 3 m)
14	ROKC00P064	PE white pipe, dia. 6 - whole coil L = 100 m
15	ROKC00TEE1	T-shaped connector with quick couplings for dia. 10 pipe
16	ROKC00KTVE	Kit of additional expansion vessel, capacity 15 l + pipe and connectors
	ROKC00VE15	Expansion vessel (spare part without pipes and connectors)
17	ROKC00P107	PE white pipe, dia. 10, for permeate line - whole coil L = 150 m
18	ROKC00VALS	Quick coupling ball valve for dia. 10 pipe
19	ROKL00PSHP	Pump max. pressure switch, in brass, calibrated at 12 bar - 1/4" - N.C.
20	ROKL00IV14	Flushing solenoid valve, 230 V - 1/4"
21	ROKL00EC01	Conductivity meter for permeate conductivity measurement
22	ROKC00WREN	Spanner for 10" filter tightening

Tab. 7.b

8. WATER CIRCUIT

8.1 ROC025/040 water circuit

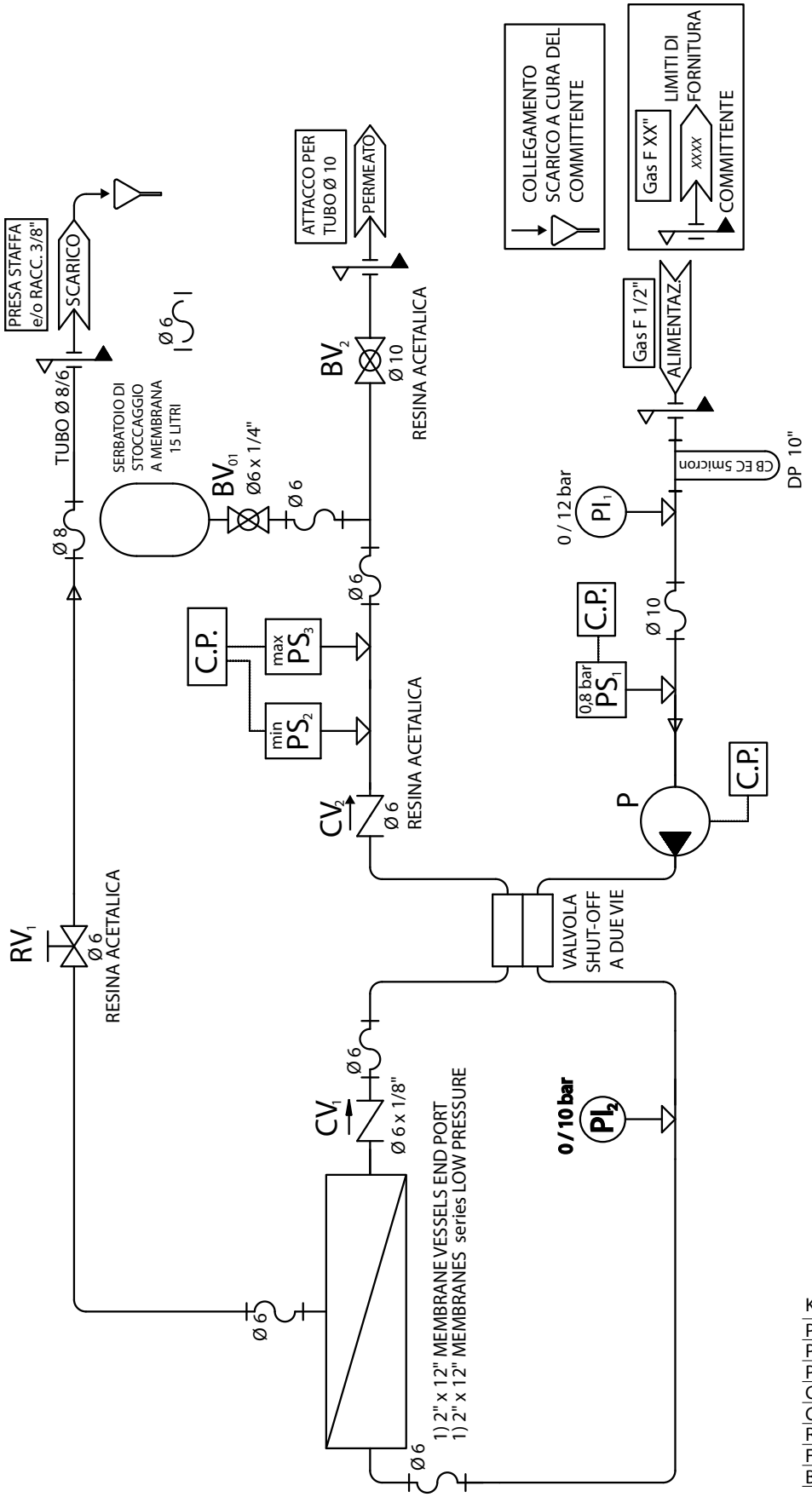

Key	
PI	pressure gauge
PS	pressure switch
P	rotary electric pump
CV	spring-loaded check valve
C.P.	RO system control panel
RV	regulating valve
FR	calibrated flow restrictor
BV	manual ball valve

Fig. 8.a

8.2 ROC060 water circuit

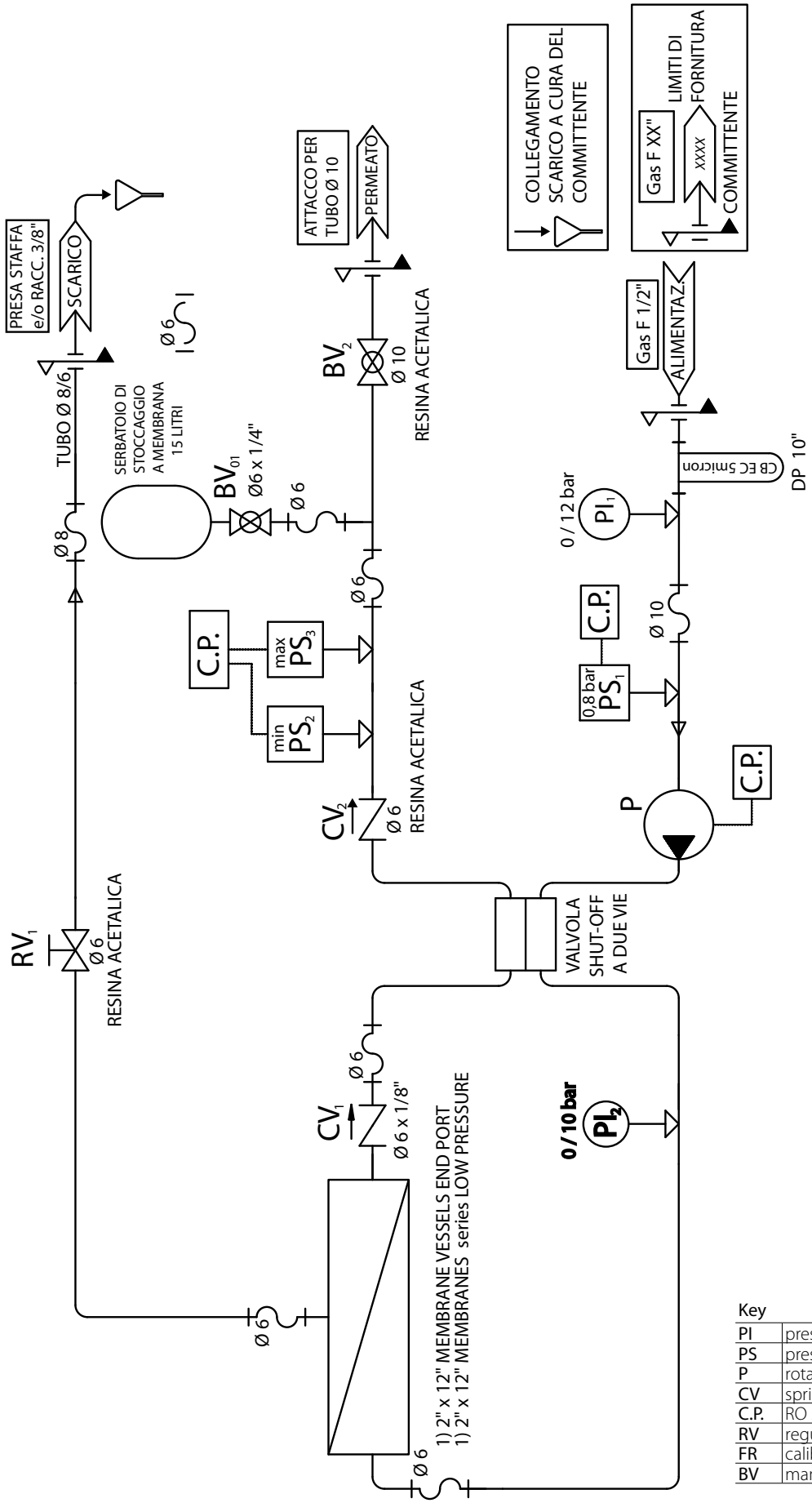

Key	
PI	pressure gauge
PS	pressure switch
P	rotary electric pump
CV	spring-loaded check valve
C.P.	RO system control panel
RV	regulating valve
FR	calibrated flow restrictor
BV	manual ball valve

Fig. 8.b