humiSteam Wellness

humidifiers for steam baths

CAREL

ENG User manual

LEGGI E CONSERVA QUESTE ISTRUZIONI

READ AND SAVE THESE INSTRUCTIONS

Integrated Control Solutions & Energy Savings

WARNINGS

The CAREL humidifiers are advanced products, whose operation is specified in the technical documentation supplied with the product or can be downloaded, even prior to purchase, from the website www.carel.com. Each CAREL product, in relation to its advanced level of technology, requires setup/configuration/programming/commissioning to be able to operate in the best possible way for the specific application. The failure to complete such operations, which are required/indicated in the user manual, may cause the final product to malfunction; CAREL accepts no liability in such cases.
The customer (manufacturer, developer or installer of the final equipment) accepts all liability and risk relating to the configuration of the product in order to reach the expected results in relation to the specific final installation and/or equipment. CAREL may, based on prior agreements, act as a consultant for the installation/commissioning/use of the unit, however in no case does it accept liability for the correct operation of the humidifier and the final installation if the warnings or suggestions provided in this manual or in other product technical documents are not heeded. In addition to observing the above warnings and suggestions, the following warnings must be heeded for the correct use of the product:

- **DANGER OF ELECTRIC SHOCK**

The humidifier contains live electrical components. Disconnect the mains power supply before accessing inside parts or during maintenance and installation.

- **DANGER OF WATER LEAKS**

The humidifier automatically and constantly fills/drains certain quantities of water. Malfunctions in the connections or in the humidifier may cause leaks.

- **DANGER OF BURNS**

The humidifier contains high temperature components and delivers steam at 100°C/ 212°F.

Important:

- The installation of the product must include an earth connection, using the special yellow-green terminal available in the humidifier.
- The environmental and power supply conditions must conform to the values specified on the product rating labels.
- The product is designed exclusively to humidify rooms either directly or through distribution systems (ducts).
- Only qualified personnel who are aware of the necessary precautions and able to perform the required operations correctly may install, operate or carry out technical service on the product.
- Only water with the characteristics indicated in this manual must be used for steam production.
- All operations on the product must be carried out according to the instructions provided in this manual and on the labels applied to the product. Any uses or modifications that are not authorised by the manufacturer are considered improper. CAREL declines all liability for any such unauthorised use.
- Do not attempt to open the humidifier in ways other than those specified in the manual.
- Observe the standards in force in the place where the humidifier is installed.
- Keep the humidifier out of the reach of children and animals.
- Do not install and use the product near objects that may be damaged when in contact with water (or condensate). CAREL declines all liability for direct or indirect damage following water leaks from the humidifier.
- Do not use corrosive chemicals, solvents or aggressive detergents to clean the inside and outside parts of the humidifier, unless specifically indicated in the user manual.
- Do not drop, hit or shake the humidifier, as the inside parts and the linings may be irreparably damaged.

CAREL adopts a policy of continual development. Consequently, CAREL reserves the right to make changes and improvements to any product described in this document without prior warning. The technical specifications shown in the manual may be changed without prior warning.
The liability of CAREL in relation to its products is specified in the CAREL general contract conditions, available on the website www.carel.com and/or by specific agreements with customers; specifically, to the extent where allowed by applicable legislation, in no case will CAREL, its employees or subsidiaries be liable for any lost earnings or sales, losses of data and information, costs of replacement goods or services, damage to things or people, downtime or any direct, indirect, incidental, actual, punitive, exemplary, special or consequential damage of any kind whatsoever, whether contractual, extra-contractual or due to negligence, or any other liabilities deriving from the installation, use or impossibility to use the product, even if CAREL or its subsidiaries are warned of the possibility of such damage.

DISPOSAL

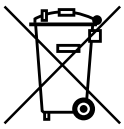

The humidifier is made up of metal parts and plastic parts. In reference to European Union directive 2002/96/EC issued on 27 January 2003 and the related national legislation, please note that:

1. WEEE cannot be disposed of as municipal waste and such waste must be collected and disposed of separately;
2. the public or private waste collection systems defined by local legislation must be used. In addition, the equipment can be returned to the distributor at the end of its working life when buying new equipment;
3. the equipment may contain hazardous substances: the improper use or incorrect disposal of such may have negative effects on human health and on the environment;
4. the symbol (crossed-out wheeled bin) shown on the product or on the packaging and on the instruction sheet indicates that the equipment has been introduced onto the market after 13 August 2005 and that it must be disposed of separately;
5. in the event of illegal disposal of electrical and electronic waste, the penalties are specified by local waste disposal legislation.

Warranty on the materials: 2 years (from the date of production, excluding consumables).

Approval: the quality and safety of CAREL products are guaranteed by the ISO 9001 certified design and production system, as well as by the CE mark.

CONTENT

1. INTRODUCTION AND ASSEMBLY 7

1.1 humiSteam Wellness (UEW*) 7
1.2 Dimensions and weights 7
1.3 Opening the packaging 7
1.4 Positioning 7
1.5 Wall-mounting 8
1.6 Removing the front cover 8
1.7 Fitting the front cover 9
1.8 Components and accessories 9

2. WATER CONNECTIONS 10

2.1 Supply water 12
2.2 Drain water 12

3. STEAM DISTRIBUTION 13

3.1 CAREL jet distributors (SDPOEM00**) 13
3.2 CAREL linear distributors for air ducts (DP***DR0) 13
3.3 Steam hoses 14
3.4 Condensate drain hose 14

4. ELECTRICAL CONNECTIONS 15

4.1 Preparing the electric cableways 15
4.2 Power cable connection 15
4.3 Control signals (M2.1 - M2.8; M7.1 - M7.2) 15
4.4 Alarm contact (M6.1 - M6.3) 17
4.5 Utility connections (light, fans, sanitisation, essences) 17
4.6 Remote display terminal 19
4.7 GSM network connection (send SMS) 19
4.8 Supervisory network (J19) 19
Control of production from serial port (BMS) 20
Stop production from serial port (BMS) 20
Modbus® protocol 20

5. STARTING AND USER INTERFACE 21

5.1 Starting 21
5.2 Stopping 21
5.3 Basic configuration (WIZARD) 21
5.4 Keypad 22
5.5 "Simple" screen 22
5.6 "Main" screen 22
5.7 "Rapid Selection" screen 22
5.8 "INFO" screen (read-only) 23
5.9 "Alarms" screen 23
5.9a Main menu 24

6. USER MENU 26

6.1 Keyboard lock 26
6.2 Alarm Hight Temperature 26
6.3 System clock 26
6.4 Enable scheduler 26

7. INSTALLER MENU 27

7.1 Type of control 27
7.2 Utilities configuration 27
7.3 Functional options 28
7.4 Drain options 28
7.5 Supervisory 29
7.6 GSM 29

8. MAINTENANCE MENU 30

8.1 Config. resore 30
8.2 System info 30
8.3 Manual procedure 30
8.4 Cylinder substitution 30
8.5 Alarm history 30

9. TABLE OF ALARMS 31

10. MAINTENANCE AND SPARE PARTS 33

10.1 Spare parts for models UE001 to UE018 33
10.2 Spare parts for models UE025 to UE065 35
10.3 Cleaning and maintenance of the cylinder 37
10.4 Mechanically draining the water in the cylinder 37
10.5 Cylinder connection, three-phase models UE001 to UE065 38
10.6 Cleaning and maintenance of the other components 38

11. WIRING DIAGRAMS 39

11.1 Diagram of single-phase models UE001 to UE009 39
11.2 Diagram of three-phase models UE003 to UE018 40
11.3 Diagram of three-phase models UE025 to UE065 41

12. GENERAL FEATURES AND MODELS 42

12.1 humiSteam models and electrical specifications 42
12.2 Technical specifications 43
12.3 Models of steam hoses 43
12.4 Models of concentrated jet steam distributors 44
12.5 Models of linear distributors 44
12.6 Controlling the board via network 45

13. TECHNICAL APPENDIX 49

13.1 Operating principle 49
13.2 Control principles 49
13.3 Supply water conductivity 50
13.4 Automatic draining 50
13.5 Automatic insufficient supply water management 50
13.6 Cylinder "exhaustion" and cylinder " pre-exhaustion" alarms 50

1. INTRODUCTION AND ASSEMBLY

1.1 humiSteam Wellness (UEW*)

Range of isothermal immersed electrode humidifiers with liquid crystal display for the control and distribution of steam.

Models available (identifiable from the code shown on the product):
UE001, UE003, UE005, UE008, UE009, UE010, UE015, UE018: steam production capacity up to 18 kg/h (39.7 lb/h), water connections under the base of the humidifier;
UE025, UE035, UE045, UE065: steam production capacity from 25 to 65 kg/h (55.1 to 144.3 lb/h), water connections on the side of the humidifier.

1.2 Dimensions and weights

Models UE001 to UE018

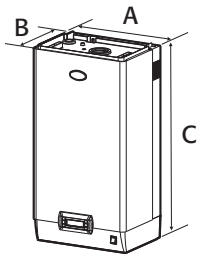

Fig. 1.a

		UE001 to UE008	UE009 to UE018
dimensions mm (in)	A	365 (14.4)	
	B	275 (10.8)	
	C	712 (28.0)	
weights kg (lb)	packaged	16 (35.3)	20 (44.0)
	empty	13.5 (29.8)	17 (37.5)
	installed*	19 (41.9)	27 (59.5)

Models UE025 to UE065

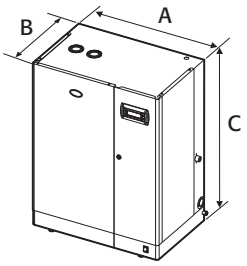

Fig. 1.b

		UE001 to UE008	UE009 to UE018	UE025 to UE045	UE045** to UE065
dimensions mm (in)	A	365 (14.4)		545 (21.5)	635 (25.0)
	B	275 (10.8)		375 (14.8)	465 (18.3)
	C	712 (28.0)		815 (32.0)	890 (35.0)
weights kg (lb)	packaged	16 (35.3)	20 (44.0)	39 (86.0)	51 (112.4)
	empty	13.5 (29.8)	17 (37.5)	34 (74.9)	44 (97.0)
	installed*	19 (41.9)	27 (59.5)	60.5 (133.4)	94 (207.2)

*: in operating conditions
**: 230 Vac model

1.3 Opening the packaging

- ☐ make sure the humidifier is intact upon delivery and immediately notify the transporter, in writing, of any damage that may be due to careless or improper transport;
- ☐ move the humidifier to the site of installation before removing from the packaging, grasping the neck only from underneath the base;
- ☐ open the cardboard box, remove the protective material and remove the humidifier, keeping it vertical at all times.

1.4 Positioning

- the unit is designed to be mounted on a wall that is strong enough to support the weight in normal operating conditions (see Wall-mounting below). Models UE025 to UE065 can stand on the floor;
- to ensure correct steam distribution, position the humidifier near the point of steam distribution;
- make sure the humidifier is level, allowing the minimum clearances (see Fig. 1.d) for maintenance operations.

Important: during operation the metal casing heats up and the rear part resting against the wall may reach temperatures in excess of 60 °C (140 °F) .

Distances from walls

Models UE001 to UE018 Models UE025 to UE065

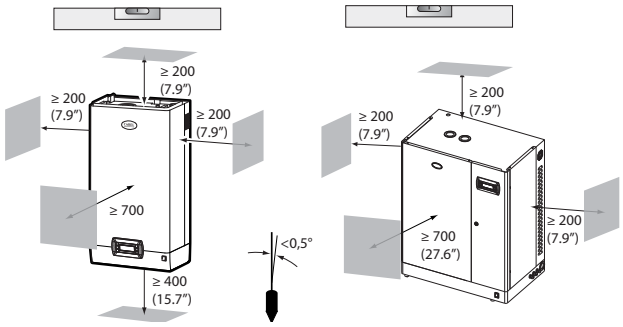

Fig. 1.c

1.5 Wall-mounting

Fit the humidifier on the wall using the support bracket and the screw kit supplied (for the dimensions in mm see Fig. 1.d).
Assembly instructions:

1. unscrew the wall bracket from the humidifier bracket;
2. fasten the wall bracket (see Fig. 1.e), checking horizontal position with a spirit level; if installed on a masonry wall, the plastic anchor plugs (dia. 8 mm/0.31") and screws (dia. 5 mm x L= 50 mm/ 0.19"x L= 1.97") supplied can be used;
3. hang the appliance to the bracket using the slot on the top edge of the rear of the appliance;
4. secure the appliance to the wall through the hole in the centre on the rear of the unit. For the weights and dimensions see Figs. 1.a, 1.b, 1.c

Wall-mounting

Models UE001 to UE065

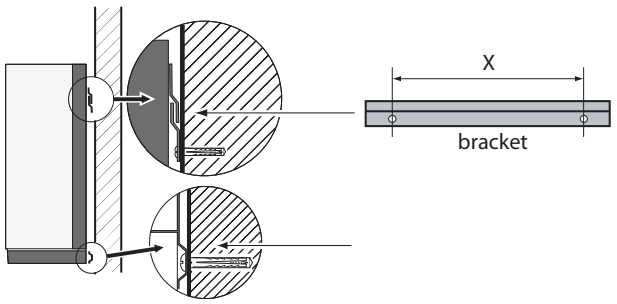

Fig. 1.d

Spacing of the holes on the wall
Models UE001 to UE018

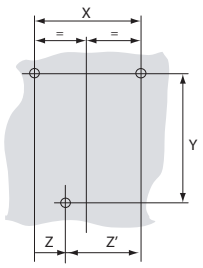

distance mm (in)	Models	
	UE001 to UE008	UE009 to UE018
X	270 (10.7)	
Y	580 (22.8)	
Z	107 (4.2)	107 (4.2)
Z'	163 (6.4)	163 (6.4)

Fig. 1.e

Models UE025 to UE065

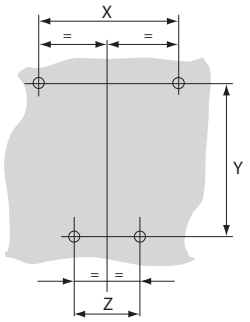

distance mm (in)	UE025 to UE045	UE045* to UE065
X	445 (17.5)	535 (21.0)
Y	655 (25.8)	730 (28.7)
Z	250 (9.8)	340 (13.4)

* 230 Vac models only

Fig. 1.f

1.6 Removing the front cover

Models UE001 to UE018

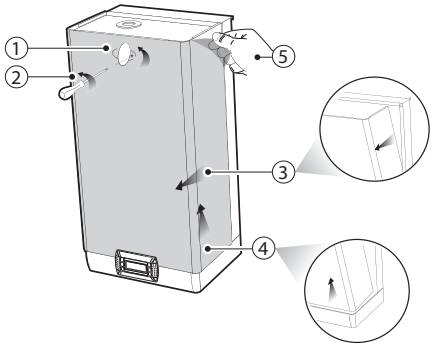

Fig. 1.g

1. turn oval-shaped label with the Carel logo, revealing the head of the earth screw below;
2. remove the screw using a screwdriver;
3. hold the cover by the sides and tilt;
4. remove the cover by moving to the bottom;
5. remove the protective film

Models UE025 to UE065

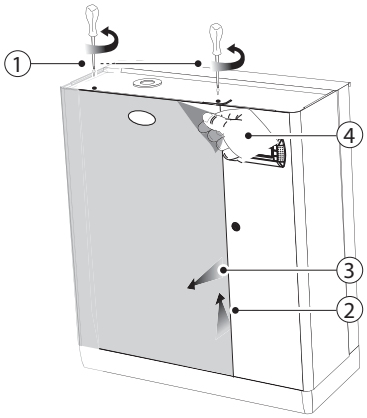

Fig. 1.h

1. remove the screws from the top of the humidifier using a screwdriver;
2. hold the cover/covers from the top and lift it around 20 mm (0.79");
3. remove the cover/covers by moving it/them forwards;
4. remove the protective film (on all the outside surfaces of the humidifier).

1.7 Fitting the front cover

Models UE001 to UE018

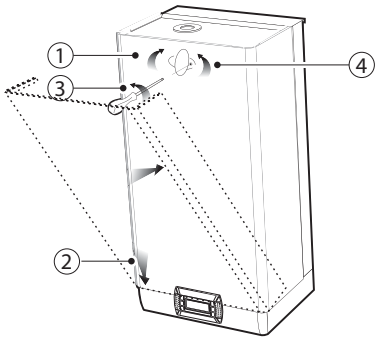

Fig. 1.i

1. turn the red oval-shaped plate with the CAREL logo, revealing the fastening hole below;
2. slip the cover onto the frame (keeping it slightly oblique), until it rests on the rear edges, paying attention to the positioning holes on the side;
3. tighten the earth screw using a screwdriver;
4. turn the red oval-shaped plate with the CAREL logo until covering the fastening holes.

Models UE025 to UE065

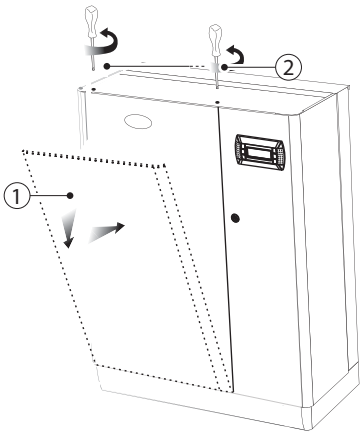

Fig. 1.l

1. slip the cover/covers onto the frame (keeping it/them slightly raised and tilted), until it rests on the rear edges;
2. tighten the screws on the top of the humidifier using a screwdriver.

Important: in models UE025 to UE065 open the electrical compartment on the humidifier using the lock with slot.

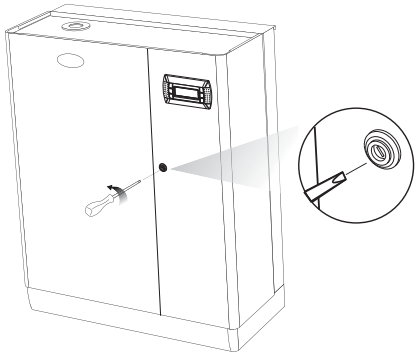

Fig. 1.m

1.8 Components and accessories

Once having opened the packaging and removed the front cover of the humidifier, make sure the following are included:

☐ kit of screws with plugs for wall-mounting;

☐ kit code 98C565P009 of connectors for the electronic board

☐ kit code 98C565P012 of connector with label and cable gland for the connection of the utility cables (light, fans, essences and sanitisation pump)

☐ filter code 98C565P016 for fill solenoid valve

☐ kit code 98C565P018 of connectors for terminals with voltage-free contacts

☐ models UE025 to UE065 only: code FWHDCV0000 non-return valve with connection pipe

☐ UE025 to UE065 only: angular plastic hose (drain water connection).

2. WATER CONNECTIONS

Important: before proceeding, disconnect the power supply.
.

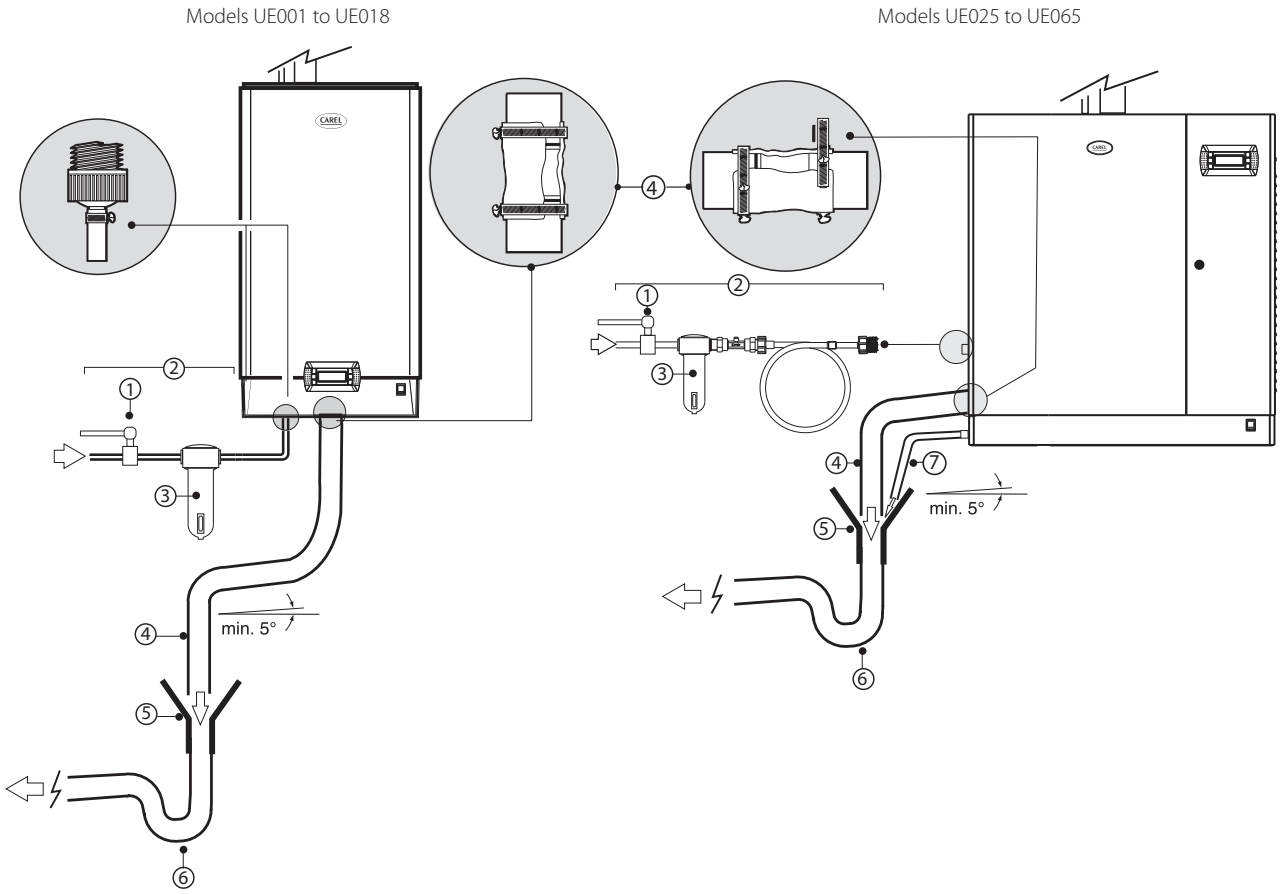

Fig. 2.a

Water connections:

- ☐ 1. install a manual valve upstream of the installation (to be able to cut off the water supply);
- ☐ 2. connect the humidifier to the water supply. On models UE001 to UE0018, use a hose with 3/4"G fittings (see par. "Technical specifications" page 41, compatible CAREL hose: code FWH3415000). On models UE025 to UE065 connect the hose with the non-return valve supplied (code FWHDCV0000) to prevent the water inside the humidifier from coming into contact with the mains water;
- ☐ 3. install a mechanical filter to trap any solid impurities (to be connected downstream of the tap);
- ☐ 4 connect a section of non-conductive pipe or hose for draining (resistant to temperatures of 100 °C (212 °F) and with a minimum inside diameter of 40 mm/1.6");
- ☐ 5 prepare a funnel to interrupt continuity in the drain line;
- ☐ 6 connect a drain trap to prevent the return of bad odours (minimum inside diameter 40 mm/1.6");
- ☐ 7 in models UE025 to UE065: connect a drain hose from the bottom tank of the humidifier (this can run into the drain funnel).

Important: when installation is completed, flush the supply hose for around 30 minutes by piping water directly into the drain, without sending it into the humidifier. This will eliminate any scale or processing residues that may block the drain pump and cause foam when boiling.

Fittings provided for the water connections:

Modelli UE001…UE018

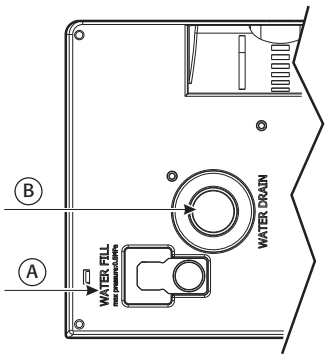

Modelli UE025…UE065

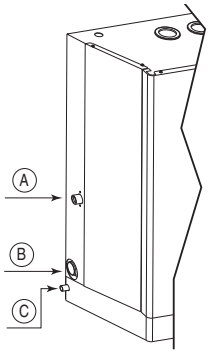

Key:

A. supply water inlet
B. drain water outlet
C. bottom tank drain water outlet (models UE025 to UE065 only)

Fig. 2.b

Hydraulic interfaces dimensions

Interfaces dimensions drain/fill

dimensions mm (inc)	UE001 a UE018
D	72.6 (28.6)
D'	125.4 (49.4)
E	52.6 (20.7)
E'	107.5 (42.3)

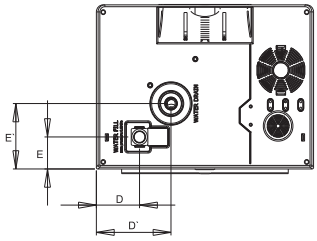

Interfaces dimensions steam outlet and condensed drain

dimensions mm (inc)	UE001 a UE018
F	126.7 (5)
F'	224 (8.82)
G	137.9 (5.43)
G'	21.7 (0.85)

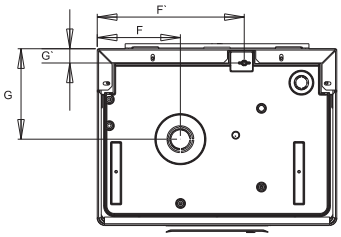

Interfaces dimensions drain/fill

dimensions mm (inc)	UE025 a UE065
I	40 (1.58)
I'	72 (2.83)
I"	10.2 (0.4)
L	123.2 (4.85)
L'	231.2 (9.10)
L"	49.1 (1.93)

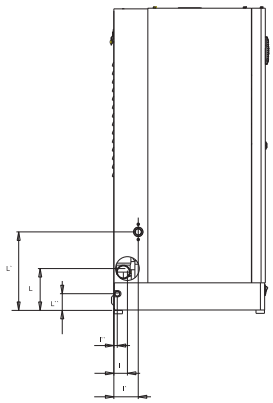

Interfaces dimensions steam outlet and condensed drai

dimen. mm (inc)	UE025 a UE045	UE045* a UE065
M	172 (67.7)	223.7 (88.1)
M'	30.2 (11.9)	30.2 (11.9)
N	181 (71.3)	181 (71.3)
N'	---	100 (39.4)
N"	55 (21.7)	61 (24.0)

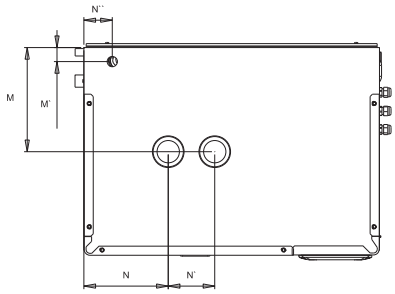

* modells 230 Vac only

2.1 Supply water

Only use mains water with:

- pressure between 0.1 and 0.8 MPa (14.5 and 116 PSI), temperature between 1 and 40 °C (33.8 and104 °F) and an instant flow-rate no lower than the rated flow of the fill solenoid valve, the connection is G3/4M (see par. "Technical specifications" page 41);
- range hardness 10 to 40 °F h (equal to 400 ppm of $CaCO_3$), conductivity: 75 to 1250 µS/cm;
- no organic compounds.

supply water characteristics	unit of measure	normal water		water with low salt content	
		min.	max.	min.	max.
Hydrogen ions (pH)		7	8.5	7	8,5
Specific conductivity at 20°C ($\sigma_{R,\,20\,°C}$)	µS/cm	350	1250	75	300
Total dissolved solids (c_R)	mg/l	(1)	(1)	(1)	(1)
Dry residue at 180°C (R_{180})	mg/l	(1)	(1)	(1)	(1)
Total hardness (TH)	mg/l $CaCO_3$	100 (2)	400	50 (2)	150
Temporary hardness	mg/l $CaCO_3$	60 (3)	300	30 (3)	100
Iron + Manganese	mg/l Fe+Mn	=	0.2	=	0.2
Chlorides	ppm Cl	=	30	=	20
Silica	mg/l SiO_2	=	20	=	20
Residual chlorine	mg/l Cl-	=	0.2	=	0.2
Calcium sulphate	mg/l $CaSO_4$	=	100	=	60
Metallic impurities	mg/l	0	0	0	0
Solvents, thinners, detergents, lubricants	mg/l	0	0	0	0

Tab. 2.a

(1)= values depend on the specific conductivity; in general:
TDS ≅0,93 * $\sigma_{R,\,20\,°C}$; R_{180} ≅ 0,65 * $\sigma_{R,\,20\,°C}$
(2) = not less than 200% of the chloride content in mg/l CL
(3) = not less than 300% of the chloride content in mg/l CL

There is not reliable relationship between hardness and conductivity of the water

Important:

- do not treat the water with softeners, this may cause the entrainment of foam, affecting the operation of the unit;
- do not add disinfectants or anticorrosive compounds to the water, as these are potential irritants;
- the use of well water, industrial water or water from cooling circuits and, in general, any potentially chemically or bacteriologically contaminated water is not recommended.

2.2 Drain water

- this contains the same substances dissolved in the supply water, however in larger quantities;
- it may reach a temperature of 100 °C (212 °F);
- it is not toxic and can be drained into the sewerage system.

3. STEAM DISTRIBUTION

For the correct delivery of steam, a steam distributor must be used, sized according to output of the humidifier.
In addition, the distributor must be installed in a part of the steam bath that is easily reached by the hoses running from the humidifier (see Fig. 3.b as an installation example).

3.1 CAREL jet distributors (SDPOEM00**)

These can be fitted horizontally or vertically (hole facing upwards).
See page 42 for the models of distributors.
Assembly instructions (see Fig.3.a):
- make a series of holes on the wall according to the distributor drilling template;
- insert the distributor;
- fasten the flange using 4 screws.

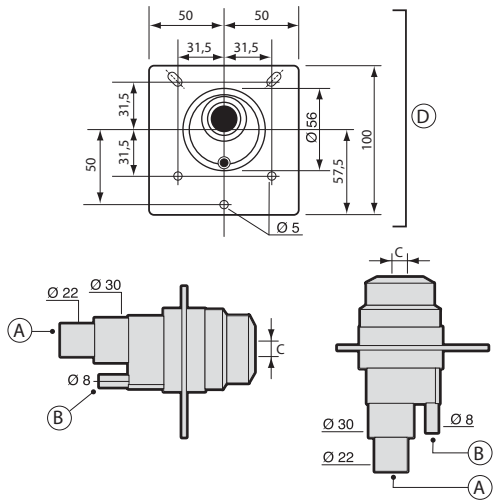

Fig. 3.a

Key:

A. steam inlet
B. condensate drain
C. steam outlet.
the dimensions of the hole vary depending on the models of distributor:
model SDPOEM0000: hole made manually, up to 30 mm (1.2") in diameter);
model SDPOEM0012: diameter of the hole 12 mm (0.5");
model SDPOEM0022: diameter of the hole 22 mm (0.9").
D drilling template

Note: if steam hoses with an inside diameter of 30 mm (1.2") are used, remove the 22 mm (0.9") steam inlet section.

3.2 CAREL linear distributors for air ducts (DP***DR0)

Install away from obstacles (curves, branches, changes in cross-section, grills, filters, fans).
Minimum distance between the distributor and the obstacle: 1/1.5 m (3.3/4.9 ft). Increase the distance if:
- the air speed increases in the duct,
- the relative humidity of the air increases before and after humidification,
- the turbulence decreases.

See page 42 for installation examples.

Assembly instructions (see Fig.3.b):
- make a series of holes on the wall according to the distributor drilling template (included in the packaging with the distributor);
- fasten the flange using 4 screws.

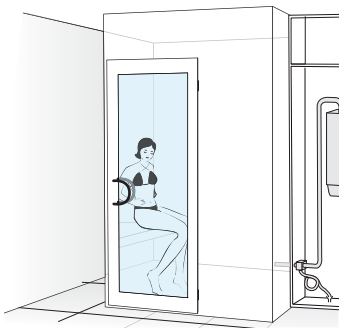

Fig. 3.b

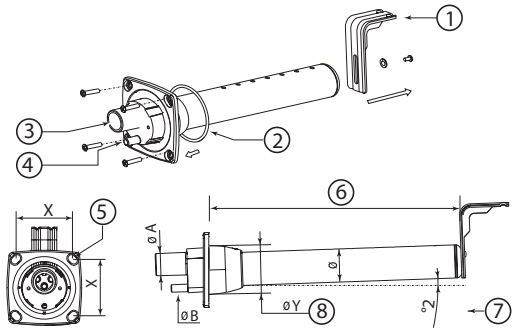

Fig. 3.c

Key:

1 "L"-shaped mounting support (where featured)
2 flange gasket
3 steam inlet (ØA)
4 condensate drain (ØB)
5 screw diameter (see the instruction sheet supplied with the distributor)
6 length (depending on the model of distributor, see par. "10.5" page 42)
7 angle (around 2°) for draining the condensate.
8 diameter of the hole on the wall (ØY)

Dimensions in mm (in)

	CAREL linear distributors		
	DP***D22R0	DP***D30R0	DP***D40R0
ØA	22 (0.9")	30 (1.18")	40 (1.57")
ØB	10 (0.4")	10 (0.4")	10 (0.4")
ØY	58 (2.3")	68 (2.7")	89 (3.5")
Ø	35 (1.4")	45 (1.8")	60 (2.4")
X	68 (2.7")	77 (3.0")	99 (3.9")

Tab. 3.a

Important:

1. fit the distributor at a slight incline (at least 2°, to prevent the return of condensate);
2. the "L"-shaped mounting support (see part 1 Fig. 3.c) is supplied with steam distributor models from DP085* to DP025*. For shorter lengths, the support can be supplied as an option (code 18C478A088).

3.3 Steam hoses

- use CAREL hoses (max. 4 m long, see "Models of steam hoses", page 41). Rigid pipes may break and cause steam leaks;
- avoid the formation of pockets or traps (causes of condensate);
- avoid choking the hose due to tight bends or twisting.
- fasten the end of the hose to the connectors on the humidifier and the steam distributor using metal clamps, so that these do not detach due to the high temperature.

3.4 Condensate drain hose

During the operation of the humidifier some of the steam may condense, causing a decline in efficiency and noise (gurgling).
To drain the condensate, connect a drain hose with a drain trap and a minimum slope of 5° to the bottom of the humidifier (see Fig. 3.d). CAREL condensate drain hoses: code 1312353APG

Important: the drain trap in the condensate drain hose must be filled with water before starting the humidifier.

Example of correct and incorrect installation of the steam hose and condensate drain hose.

Final checks

- ☐ the steam outlet hoses run upwards and the distributor has a minimum incline of 2° upwards (see Fig. 3.c);
- ☐ the ends of the hose are tightened to the fittings with metal clamps;
- ☐ the curves in the tubing are sufficiently wide (radius > 300 mm / 11.8") so as to not cause bending or choking;
- ☐ the steam hose has no pockets or traps for condensate to form;
- ☐ the paths of the steam and condensate hoses are as described in this chapter (see Fig. 3.d);
- ☐ the length of the steam hose is no greater than 4 metres (13.1 feet);
- ☐ the incline of the steam hose is sufficient to allow correct draining of the condensate (> 20° for the upward sections, > 5° for the downward sections);
- ☐ the incline of the condensate hose is at least 5° at every point;
- ☐ the condensate hose always follows a downwards path and features a drain trap (filled with water before starting operation) to avoid steam being released.

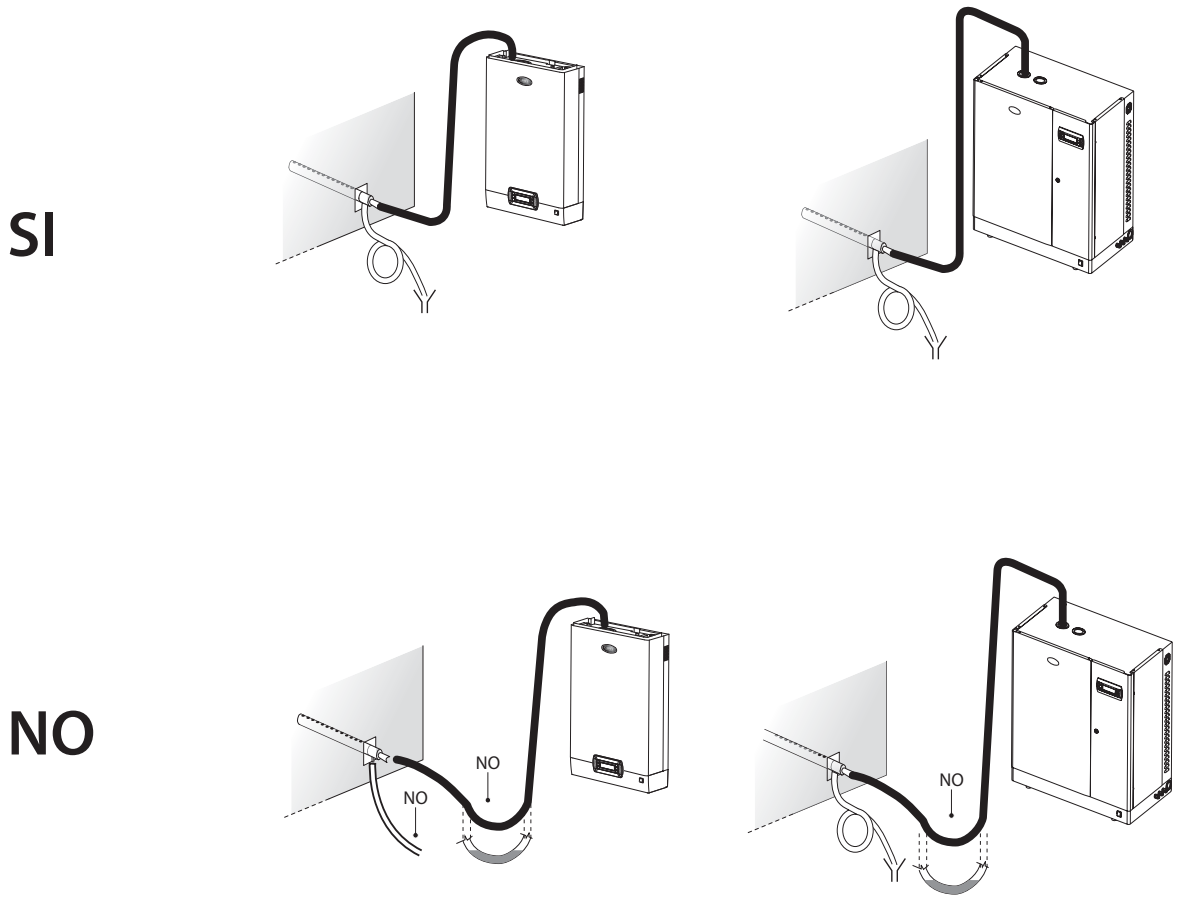

Fig. 3.d

4. ELECTRICAL CONNECTIONS

4.1 Preparing the electric cableways

Models UE001 to UE018

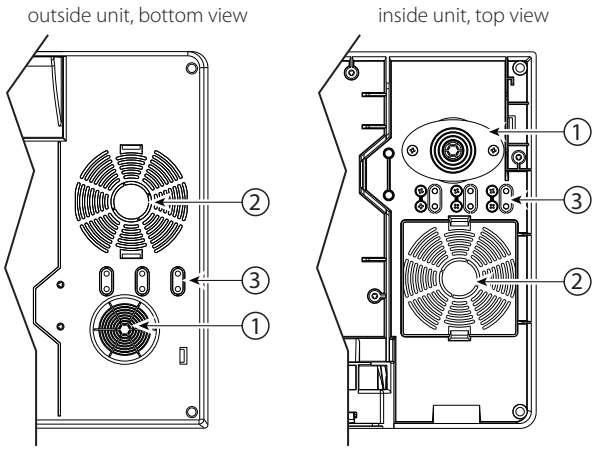

Fig. 4.a

Models UE025 to UE065
outside unit, side view

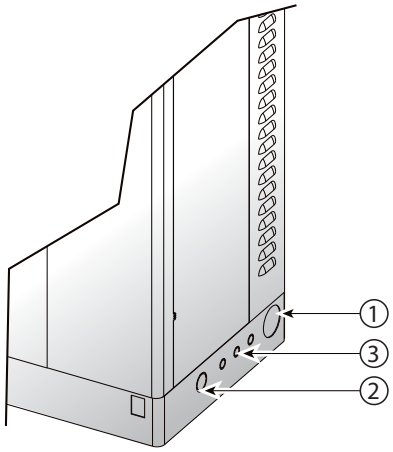

Fig. 4.b

Key to Figs. 4.a & 4.b:

1. power cable inlet;
2. optional utility cable inlet (after drilling).
3. probe cable inlet. On models UE001 to UE018, remove the plastic "tab" and use it to secure the cable (held in place by the screws provided).

4.2 Power cable connection

Before making the connections, ensure that the machine is disconnected from the mains power supply.
Check that the power supply voltage of the appliance corresponds to the value indicated on the rating plate inside the electrical panel.
Insert the power and ground connection cables into the electrical panel compartment using the tear-proof cable gland supplied, or through the cable gland with cable stop, and connect the ends to the terminals (see Fig. 4.c). The humidifier power line must be fitted, by the installer, with a disconnecting switch and fuses protecting against short circuits.
Table 12.a lists the recommended cross-sections of the power supply cable and the recommended fuse ratings; note, however, that this data is purely a guide and, in the event of non-compliance with local standards, the latter must prevail.

Note: to avoid unwanted interference, the power cables should be kept apart from the probe signal cables.

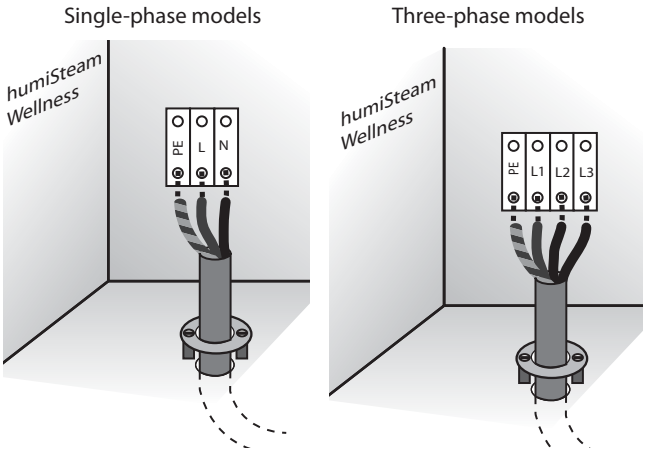

Fig. 4.c (view inside unit, electrical compartment)

Important: connect the yellow-green cable to the earth point (PE).

4.3 Control signals (M2.1 - M2.8; M7.1 - M7.2)

Steam production by the humidifier is enabled or controlled.
For connection of control signals, use the connection kit (supplied in the packaging) and run the cables from the humidifier through the cable gland (Fig. 4.a or 4.b).

Depending on the type of signal used, steam production can be enabled and/or managed in different ways.

1. Enable steam production using:

REMOTE CONTACT (ON/OFF action)

- jumper outputs M7.1 and M7.2
- connect outputs M2.7 and M2.8 to a remote contact (e.g.: switch, timer,…).

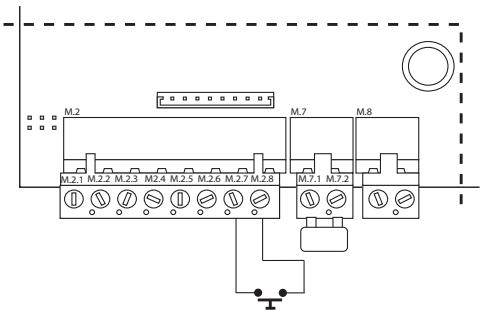

Fig. 4.d

HUMIDISTAT (ON/OFF action)

- connect outputs M7.1 and M7.2 to a humidistat
- jumper outputs M2.7 and M2.8

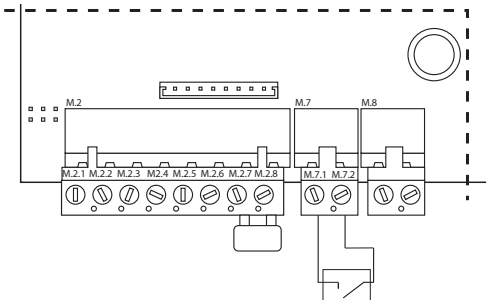

Fig. 4.e

HUMIDISTAT and REMOTE CONTACT (ON/OFF action)

- connect outputs M7.1 and M7.2 to a humidistat
- connect outputs M2.7 and M2.8 to a remote contact (e.g.: switch, timer,…)

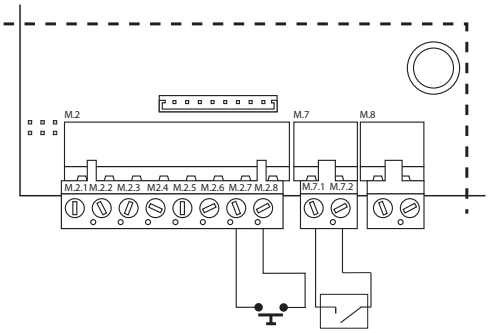

Fig. 4.f

2. Enable and control the steam production using:

PROPORTIONAL EXTERNAL CONTROLLER

- jumper outputs M2.7 and M2.8 or connect to a remote contact
- connect outputs M2.1 and M2.2 to an external controller
- The humidifier can be programmed to receive one of the following signals:

Voltage: 0 to 1 Vdc, 0 to 10 Vdc, 2 to 10 V
Current : 0 to 20 mA, 4 to 20 mA

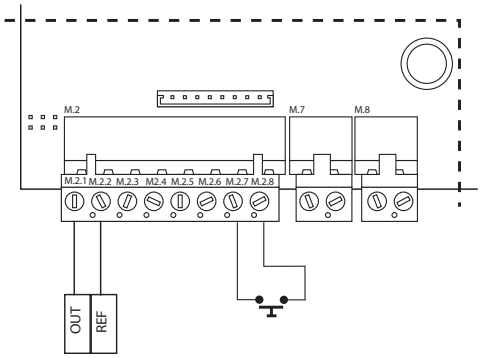

Fig. 4.g

CONTROL WITH TWO CAREL PROBE

- jumper outputs M2.7 and M2.8 or connect to a remote contact
- connect outputs M2.1, M2.2 and M2.3 to main probe
- connect second probe to terminals M2.3, M2.5 and M2.6

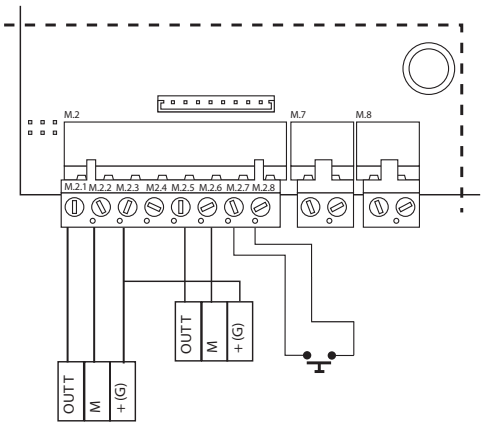

Fig. 4.h

CONTROL WITH CAREL TEMPERATURE PROBE

The humidifier can be connected to both active probes (voltage or current signal), and to passive NTC temperature probes (variable resistance).

CAREL active probe connection:

jumper outputs M2.7 and M2.8 or connect to a remote contact
connect the temperature probe to terminals M1.2, M2.2 and M2.3

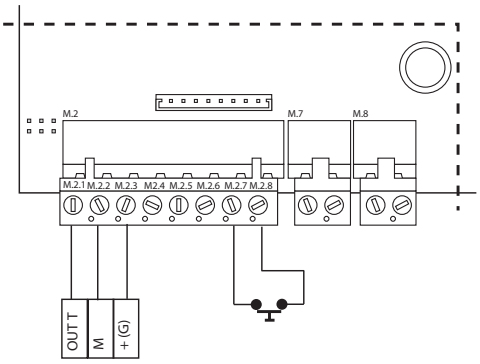

Fig. 4.i

CAREL NTC probe connection:

jumper outputs M2.7 and M2.8 or connect to a remote contact;
connect the NTC probe to terminals M1.2, M2.2 ;
connect the second NTC probe if available to terminals M2.5, M2.6 ;

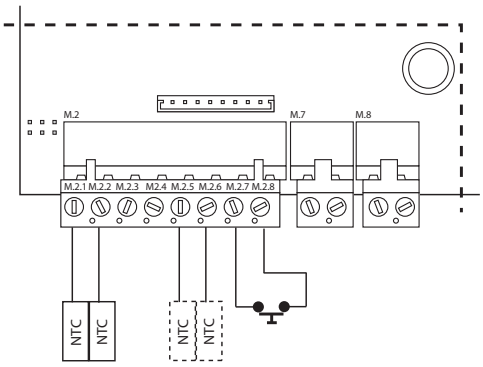

Fig. 4.j

CAREL PROBES AVAILABLE:
- room: code ASET030001

If non-CAREL probes are used, check:
- voltage signal: 0 to 1 Vdc, 0 to 10 Vdc, 2 to 10 Vdc, terminal M2.1 (GND: M2.2);
- current signal: 4 to 20, 0 to 20 mA, terminal M2.4 (GND: M2.6).

In addition, depending on the type of power supply:
- +15 Vdc, terminal M2.3;
- + 1 Vdc 135 ohm, terminal M2.4.

Input probe configuration (pin strip connectors JS5, JS6)

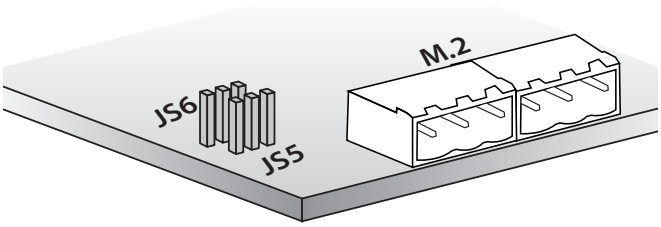

Fig. 4.k (detail of electronic board, in the humidifier electrical compartment)

pin strip	configuration	position	
		0 to 10 Vdc 2 to 10 Vdc	0 to 1 Vdc, 4 to 20/0 to 20 mA, NTC probes
JS5	main probe		basic configuration
JS6	limit probe		basic configuration

Important:
- to avoid unbalanced control, the earth of the probes or the external control devices must be connected to the earth of the appliance's controller.
- If ON/OFF terminals are not closed, all the internal and external devices managed by the controller will be disabled, with the exception of the drain pump for emptying the unit after extended periods.

Note: in industrial environments (IEC EN61000-6-2), the cables leaving the unit must not exceed 30 m in length, except for the main probe (terminals M2 pin 1-2-3-4-5-6), the remote ON/OFF digital input (terminal M2 pin 7-8) and cable shields for RS485 communication.

4.4 Alarm contact (M6.1 - M6.3)

Contact available for the remote signalling of one or more alarms.

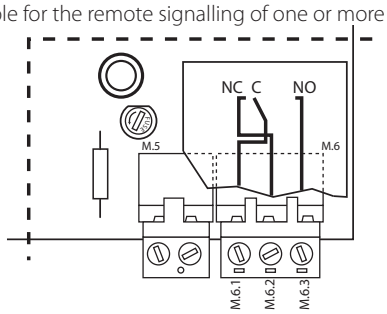

Fig. 4.l

Electrical specifications: 250 Vac; Imax: 2 A resistive 2 A inductive.

Note: use clamps on the relay terminal blocks (alarm, utilities) to prevent the cables from being detached.

Final checks

The following conditions represent correct electrical connection:

- ☐ the rated voltage of the appliance corresponds to the rated supply voltage;
- ☐ the fuses installed are suitable for the line and the power supply voltage;
- ☐ a mains disconnect switch has been installed to disconnect power to the humidifier when required;
- ☐ the humidifier has been correctly earthed;
- ☐ the power cable is fastened using the tear-proof cable gland;
- ☐ terminals M2.7 and M2.8 are jumpered or connected to an enable-operation contact;
- ☐ if the humidifier is controlled by an external control device, the earth of the signal is electrically connected to the controller earth.

4.5 Utility connections (light, fans, sanitisation, essences)

The humidifier features of a terminal block for connecting the utilities, located under the electronic board (see the following figure for the connections).

Depending on the type of connection, the required voltage is made available for the outputs to the utilities (12 V, 24 V, 230 V or voltage-free contact).

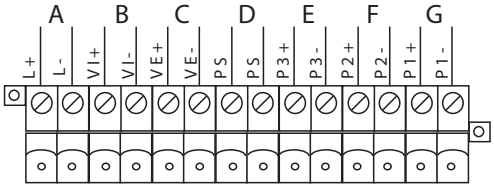

Fig. 4.m (detail of utilities board, humidifier electrical compartment)

Legenda:

A light (L+ L-);
B supply fan (VI+ VI-);
C exhaust fan (VE+ VE-);
D sanitisation pump (PS PS);
E essence pump 3 (P3+ P3-);
F essence pump 2 (P2+ P2-);
G essence pump 1 (P1+ P1-).

Types of utility connection

♦ "Utilities powered at the same voltage"
The humidifier supplies power to and activates the utilities connected at the same voltage. This is done by applying a 12 V, 24 V or 230 V power supply to terminals AP1 and AP2.

Procedure:
insert the terminal block supplied (code 98C565P012) into connector A and connect the utilities (see the following figure).

Note:

- maximum load for each utility: 2 A;
- AP1 and AP2 are protected by 6.3 A fuses.

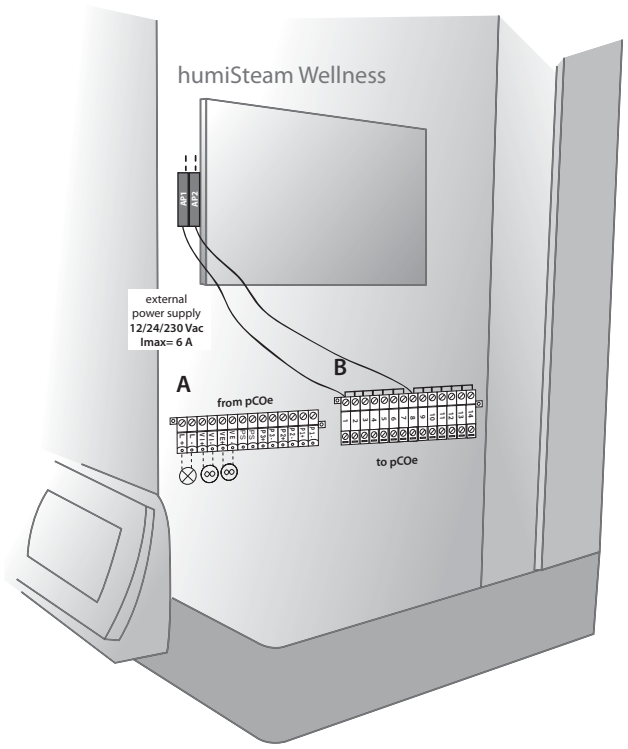

Fig. 4.n

♦ "Utilities powered at different voltages (only 12/24V)"
The humidifier activates but does not supply power to the utilities. The utilities are thus powered externally and at different voltages.

Procedure:
1. remove the terminal block (2 pieces) from connector B and disconnect the L, N cables;
   Insert the terminal block supplied (code 98C565P018) into connector B and reconnect the cables, L (terminal 1) & N (terminal 8);
2. jumper terminals AP1 and AP2;
3. insert the terminal block supplied (code 98C565P012) into connector A and connect the utilities (see the following figure).

Note:

- maximum load for each utility: 2 A;
- AP1 and AP2 are protected by 6.3 A fuses;
- the utilities must be suitably protected against overloads and short-circuits.

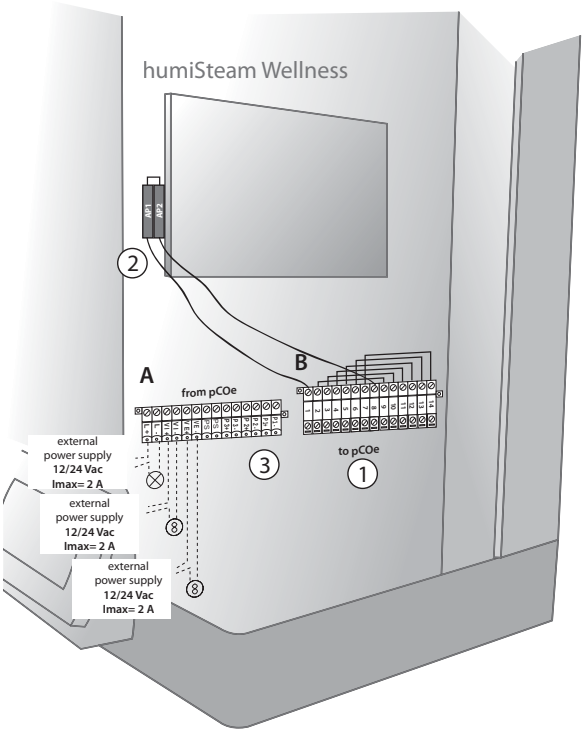

Fig. 4.o

Final checks

- ☐ the rated voltage of the appliance corresponds to the rated supply voltage;
- ☐ the fuses installed are suitable for the line and the power supply voltage;
- ☐ a mains disconnect switch has been installed to disconnect power to the humidifier when required;
- ☐ the humidifier has been correctly earthed;
- ☐ the power cable is fastened using the tear-proof cable gland;
- ☐ terminals M2.7 and M2.8 are connected by jumper or connected to an enable-operation contact;
- ☐ if non-CAREL probes are used: the earth of the probes is electrically connected to the humidifier board earth;
- ☐ if the humidifier is controlled by an external control device, the earth of the signal is electrically connected to the controller earth.

4.6 Remote display terminal

The display terminal can be detached from the humidifier and moved to another place.
Depending on the distance required, the following are necessary:
- up to 50 metres: 6-wire telephone cable and two EMC filters (code 0907858AXX) (see Fig. 5.a);
- up to 200 metres: two CAREL TCONN6J000 boards, 6-wire telephone cables and an AWG20-22 shielded cable with 3 twisted pairs (for the connection of the two boards, Fig. 5.b).

Note: to fill the empty space left by the display terminal on the humidifier, use CAREL kit code HCTREW0000.

Remote connection of the terminal up to max 50 m

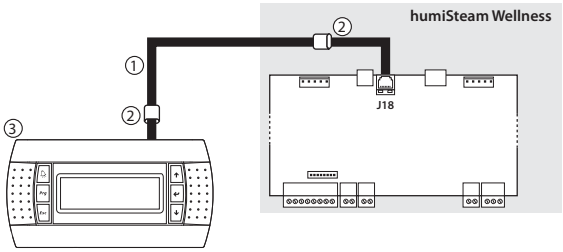

Fig. 4.p

Key:
1 telephone cable (up to 50 m distance);
2 EMC filters (code 0907858AXX) to be applied to the ends of the telephone cable;
3 remote display terminal.

Remote connection of the terminal up to 200 m

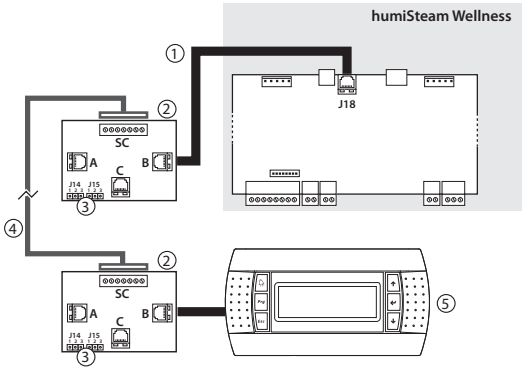

Fig. 4.q

Key:

1 telephone cable (up to 0.8 m distance);
2 CAREL TCONN6J000 board;
3 pin strip J14 and J15 in position 1-2 (power supply available on the telephone connectors A, B and C and screw SC);
4 WG20-22 shielded cable with 3 twisted pairs to move the display terminal up to 200 m away. Connection to the TCONN6J00 board:

terminal SC	function
0	EARTH (shield)
1	+VRL
2	GND
3	RX/TX-
4	RX/TX+
5	GND
6	+VRL

5 remote display terminal

4.7 GSM network connection (send SMS)

The humidifier can be configured to send SMS message for alarms and malfunctions (see menu installer > supervisor > GSM protocol).

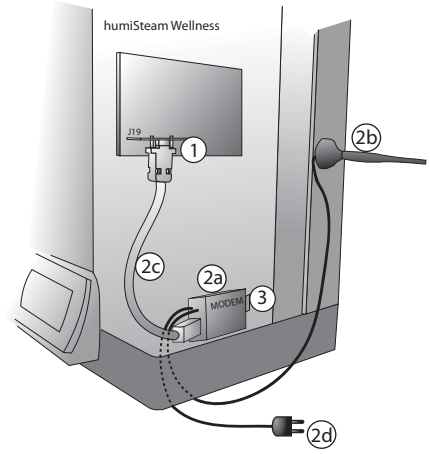

Fig. 4.r (inside humidifier, electrical compartment)

Key:
1 electronic board PCOI00MDM0 (to be connected to connector J19 on the humidifier board)
2 • CAREL GSM kit PLW0PGSM00, made up of:
  - 2.a modem
  - 2.b antenna (with magnetic base)
  - 2.c serial cable
  - 2.d power supply
3 SIM card to be inserted in the modem. Make sure that the access password (PIN number) is not enabled

4.8 Supervisory network (J19)

The humidifier is equipped with serial interface:
- PCOS004850 (for connections protocol Carel, Modbus®, Winload)

Instead of the supplied, they can be connected to a supervisory system via RS232 serial lines or FTT10 LON using the optional cards shown in the following table.

optional cards	characteristics supported	protocols
PCO1000WB0	provides BACnet 8802.3 Ethernet, BACnet/IP and MS/TP connectivity	BACnet™
PCO1000BA0	Provides BACnet MS/TP over RS485	BACnet™
PCO100MDM0	used for the direct interface of the controller to an RS232 network with an external modem	CAREL for remote connections
PCO10000F0	used to interface of the controller to an FTT10 LON network, when suitably programmed	LON-Echelon®

Tab. 5.a

Connection is also possible to TREND systems using a card sold directly by TREND.

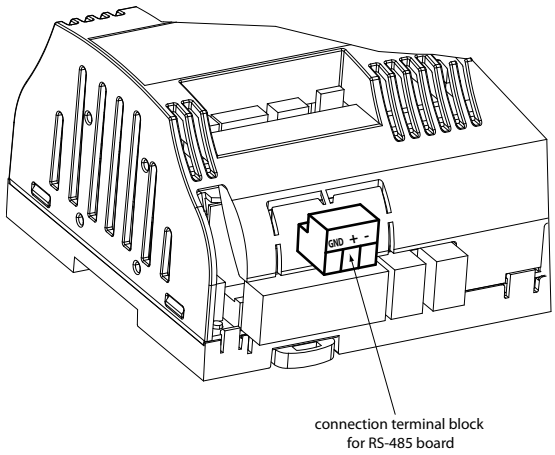

Fig. 4.s (detail of the electronic board, humidifier electrical compartment)

For the connecting remove the cover , and connect cards optional connector J19.

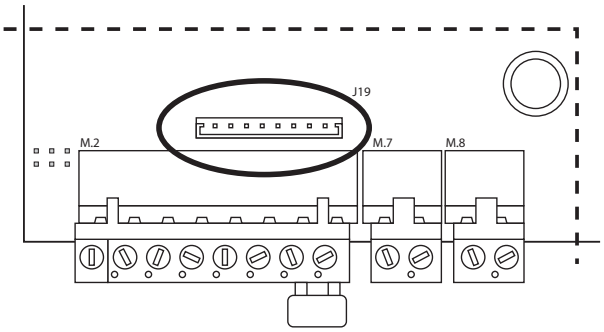

Fig. 4.t

Control of production from serial port (BMS)

You can set the electronic control to use as a primary control analogic signal value from the serial port instead of the electrical terminals **M2.1-M2.2**.

It 'can set the electronic control to use as the main analog signal adjustment value from the serial port instead of the electrical terminals M2.1-M2.2.
This value will be used according to selections made on the parameters: "Installer / Regulation Type / Select Regulation" corresponds to the variable non-volatile serial Digital 65, and "Installer / Regulation Type / Select Regulation" against the non-volatile serial Full Variable 7 (if "Type regolation CONTACT = ON / OFF ", the value from the serial port will be used instead of reading CONTACT ON / OFF).

Probe alarms are not connected in this case disabled.

Note: If you set "Type Regolation = 2 Probes Temperature", in reality the two spacecraft will be internally assigned a weight 0% and 100% weight is therefore assigned the value of the first probe from BMS.

If serial communication is interrupted (no data destined to the control for a set time), the production will stop and will sound an alarm, the production will resume restoration of serial communication.

Operate as follows:
- Parameter "Installer / Supervisor / Supervisor (2/2) / Reg. from BMS ': default off, set to ON (or via serial non-volatile digital serial Variable 80: default 0, set to 1)
- Variable volatile serial Full 31: Set a value between 0 and 1000: Proportional: tenths of a percentage, Temper: tenths of ° C / ° F, humidity: tenths of RH%.

-Variable Serial Digital 10: warning SERIAL OFFLINE

- Parameter "Installer / Supervisor / Supervisor Connect / Offline al. Delay "(or via serial Variable nonvolatile serial Full 108): SERIAL OFFLINE alarm detection time in seconds, default 60.

Stop production from serial port (BMS)

You can stop the output from the serial port.
In addition to the detention serial, there are also the following stops:
-on/off Terminal
-on/off By remote contact
If even a single firm is active production stops.
To stop the production serial follow these steps:
- Parameter "Installer / Supervisor / Supervisor Connect / Enable ON / OFF from supervisor" (or via serial non-volatile digital serial Variable 81: default 0, set to 1): Set to Yes
- Variable volatile digital serial 8: ON / OFF serial, default off (0); set to 0 to stop, 1 for non-stop production.

Modbus® protocol

The protocol Modbus ® is available by selecting from the menu installer mask supervisor.
Chapter 13.6 shows a list of variables and the corresponding addresses. For multiple read/writes, the maximum number of "Register" or "Coil" variables is 20.
The following functions are available:

MB_READ_COIL_STATUS 1:	used to request the status (ON or OFF) of a certain number of "Coil" variables (binary, 1 bit), starting from the specified address.
MB_READ_INPUT_STATUS 2:	operationally identical to the above
MB_READ_HOLDING_REG 3:	used to request the value of a consecutive block of "Register" variables (nu-meric, 16 bit)
MB_READ_INPUT_REG 4:	operationally identical to the above
MB_FORCE_SINGLE_COIL 5:	used to set the status of an individual "Coil" variable (binary, 1 bit) to ON or OFF (specifying the address of the bit in question)
MB_PRESET_SINGLE_REG 6:	used to set the value of an individual "Register" variable (numeric, 16 bit)
MB_FORCE_MULTIPLE_COIL 15:	used to set the status of a consecutive block of "Coil" variables (binary, 1 bit) (specifying the number of bits and number of bytes)
MB_PRESET_MULTIPLE_REG 16:	used to set the value of a consecutive block of "Register" variables (nume-ric, 16 bit)

Exceptions managed:
01 illegal function
02 illegal data address

Important: for the tLAN and pLAN connections in residential household (IEC EN 55014-1) and residential (IEC EN 61000-6-3) environments, use shielded cable (with shield connected to GND). This warning also applies to the cables leaving the unit.

5. STARTING AND USER INTERFACE

Before starting the humidifier, check:

- ☐ water connections: Fig. 2.a page 10. In the event of water leaks do not start the humidifier before having resolved the problem;
- ☐ steam distribution: Fig. 3.d page 13;
- ☐ electrical connections chap. 4

5.1 Starting

1

2 if the cylinder is new, run a pre-wash cycle (the cylinder is filled and emptied three times, cleaning the inside walls from impurities, see menu maintanance >change cylinder > flush new cylinder).

5.2 Stopping

1 empty the water in the cylinder to avoid stagnation: see manual drain on "SET" screens).

2 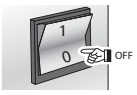

Note: the next restart, after a cylinder unloading, the following screen appears:

If you replaced the cylinder is necessary to reset the timer:	
You want to do it now?	YES…NO…Remember the next restart

Select YES only if the cylinder has been replaced (or cleaned in the case of cylinders can be opened).

5.3 Basic configuration (WIZARD)

Select language:
1. English
2. Italiano
3. Deutsch
4. Francais
5. Espaniol

Press DOWN to select the number corresponding to the desired language and then ENTER to confirm. This screen remains displayed for 60 seconds. Subsequently, the following screen will be displayed:

Note: The language can also be changed by menu installer (Installer menu> Function Optional 3/3 > language).
The language can also be changed by any form by pressing UP + ENTER

Help procedure for basic configurations.
Push ENTER to start or ESC to go back to language selection.

Regolation select. :
1 One Temperature probe
2. Two Temperature probes
3. Proportional signal
4. On/OFF contact

Press DOWN to select the number corresponding to the desired function and then ENTER to confirm. Press ESC repeatedly to return to the "Main" screen.

Signal Type:
1. NTC probe
2. 0…1 Vdc
3. 2…10 Vdc
4. 0…10 Vdc
5. 0…20 mA
6. 4…20 mA

Press DOWN to select the number corresponding to the desired function and then ENTER to confirm. Press ESC repeatedly to return to the "Main" screen.

Range probe signal (only for active probes)	range	default	U.M.
Min. Scale	-100....250	0	%rH
Max. SCale	-100...250	100	%rH
Weight probe 1 (only with 2 probes)*	0....100	50	
Weight probe 2 (only with 2 probes)*	0....100	50	

(*) to achieve a temperature value measured with two probes, the humidifi er carries out the following calculation:

Tm= (Ts1*W1/100) + (Ts2*W2/100)
Tm= temperature shown on the display
Ts1 & Ts2= temperatures read by the two probes
W1 & W2= weights attributed to the two probes, percentage value (W1+W2=100)
For example, with the following values:
Ts1= 42° W1= 60%
Ts2= 44° W2= 40%
Tm= (42*60/100) + (44*40/100)= 42.8 °C

Press DOWN to select the number corresponding to the desired function and then ENTER to confirm. Press ESC repeatedly to return to the "Main" screen.

Function Modality:
1. Steam production modulating
2. Steam production step*

* STEP means that the humidifier is on standby until the steam bath temperature falls below the set differential mask Installer Menu> Type Regolation (3/3)> T Differenz. (If type Regolation with Probe), then activates 100% of maximum production set. If the regolation is made with external thermostat, humidifier remains idle until the thermostat contact is open, you turn 100% of maximum production set when the contact is closed.

Press DOWN to select the number corresponding to the desired function and then ENTER to confirm. Press ESC repeatedly to return to the "Main" screen.

Please the jumper in elecrtonic board	
Probe 1 JS5	
Probe 2 JS6	

Screen of visiualization position of jumpers JS5 and JS6 according to the previously selected signal. ENTER to confirm and continue, ESC to return to previous form.

Choose whether or not to repeat the wizard for each power.

Do this Wizard again at next restart? YES/NO

- YES: WIZARD will appear next to the access;
- NO: WIZARD not will appear next to the access.

5.4 Keypad

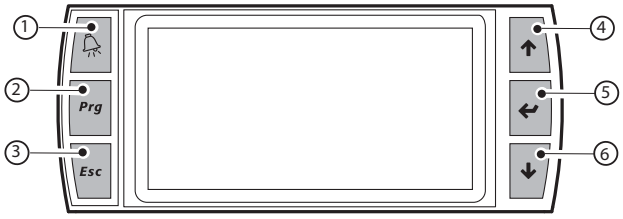

Fig. 5.a

button		function
1	alarm	LED red lit: list active alarms LED red Flashing: alarm list automatically covered
2	PRG	return to the "Main Menù" screen
		from the "Main" screen access the main menu
3	ESC	return to the previous screen/display
4	UP	increase the set point
5	ENTER	from the "Rapid Selection" screen access an "Rapid Selection" screens
		from "Simple" screen: selection of type of essence
		ENTER + PRG: move the mask "Simple" to "Main" (and vice versa).
6	DOWN	decrease the set point

5.5 "Simple" screen

It is activated / deactivated by pressing PRG and ENTER simultaneously.

Fig. 5.b

symbol	function
1	day and month
2	set point temperature(can be modified using the UP or DOWN button)
3	temperature inside the steam (measured by the probe/ probes)
4	hour and minutes
5	time bands set
6	light on inside the steam bath
Essence (e.g. Mint)	essence enable (delivered when the humidifier produces steam)may be changed or disabled by pressing ENTER

All other buttons are disabled.

5.6 "Main" screen

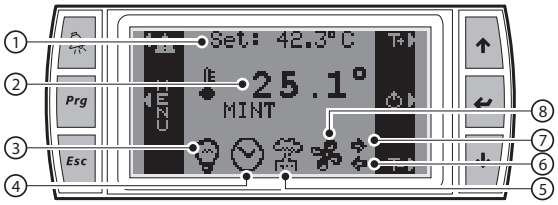

Fig. 5.c

symbol	function
1	set point temperature(can be modified using the UP or DOWN button)
2 (*)	temperature inside the steam (measured by the probe/probes)
3	light on inside the steam bath
4	time bands set
5	steam production
6	supply fan on
7	exhaust fan on
8	when moving indicates the operation of the fans, when still indicates fan enable but in stand-by
Essence (e.g. Mint)	essence enable (delivered when the humidifier produces steam)

The following screens can be accessed from the "Main" screen:
- ENTER button: "Rapid Selection"
- PRG button: "Main menu".

(*) The temperature could alternate one of the following descriptions when:
- ALARM BLOCKING: steam disabled by alarm
- OFF BY SUPERVISOR: steam production disabled by supervisor;
- OFF BY SCHEDULER: steam production disabled during a pre-set sheduler;
- OFF BY REMOTO: steam production interrupted through the opening of the "Remote ON/OFF" contact;
- OFF BY KEYBOARD: steam disabled keyboard (see "Main" screen),
- OFF MANUAL: steam disabled from manual procedures in use (see menu "Proced. Manuals).

5.7 "Rapid Selection" screen

Fig. 5.d

Rapid Selection	range	default	note
Steam	ON/OFF	OFF	
Essence*	1...3		If you select a number on the left is the name given to the essence
Fill essences	ON/OFF	OFF	if ON you call the mask below
Light *	ON/OFF/AUTO	OFF	
Fan I (supply fan)*	ON/OFF/AUTO	OFF	
Fan E (exhaust fan)*	ON/OFF/AUTO	OFF	
Sanification*	ON/OFF/AUTO	OFF	if ON you call the mask below

*=appears only if enable from Installer Menù

NOTE: In AUTO mode, the light stays on until the last active time bands while sanitation is activated after the last daily ON time slot.

If enabled time bands, and you want to change the state machine (OFF ON), or the setpoint, the following screen appears:

Regolation tmed ATTENTION: the system follows the bands	range
modify:	
status	ON/OFF
Setpoint	... °C
Fine	date and hour
Reg. timed (*)	NOT ACTIVE / ACTIVE

(*) if activated the Regolation tmed, the line "change" becomes:

Reset	YES/NO

This method breaks the Regolation tmed for time impostated in date and hour.

Fill essence

	range	default	U.M.
Fill essence 1*	ON/OFF	OFF	
Fill essence 2*	ON/OFF	OFF	
Fill essence 3*	ON/OFF	OFF	
Sanitation	ON/OFF	OFF	

select ON for the time necessary to fill the circuit selected essence, then back to OFF.

Activation Sanitation

Password Sanitation	0077

Press ENTER to confirm.

ATTENTION: secure that there are people bath

	range	default
Active cycle of sanitation	YES/NO	NO

Attention:

- the mask "Rapid Selection" show only the functions enables in phase of configuration
- if the humidifier is enable but not prducing steam, check the following possible causes:

possible cause	soluction
the temperature of the steam bath is higher than the set point	wait for the temperature of the bath to fall below the set point
alarms are active that stop steam production (ALARM button flashing)	check and resolve the error (see par.10)
The humidifier is set to "Manual"	deactivate tha manual procedure (from Maintenance Menù)
time bands are active (CLOCK icon flashing on the display)	disable the time band (from User Menù), or modify as required

Tab. 5.a

5.8 "INFO" screen (read-only)

Series of read-only screens for displaying the main humidifier status values. To access, press PRG from the "Rapid Selection" screen. There are 2 "INFO" screens ,to move from one screen to the next, press UP or DOWN. Press ESC to return to the "Main" screen.

"INFO" screens:

Info 1/2	display	U.M.
Status	(*)	
Activity		
Steam production	value	kg/h
Current	value	A
Fill valve	value	
drain pump	value	

(*) humidifer status:

- Operating: steam production in progress;
- Alarms: signalling of one or more alarms;
- OFF by Superv.: steam production disabled by supervisor;
- OFF by Sched.: steam production disabled during a pre-set sheduler;
- Remote Off: isteam production interrupted through the opening of the "Remote ON/OFF" contact;
- OFF by Keyb.: steam production disabled by keyboard (see "SET" mask);
- Manual Proc.: humidifer fuctions managed manually (maintenance menu > manual procedure);
- No request: humidifer on, without steam production request.

Info 2/2	display	UOM
Work hours	value	h
Cyl.work hours(**)	value	h
Conductivity	value	µS/cm
Alarm relay		
time bands		

(*) cylinder status:

- Off: stop steam production (no request or signalling of an alarm)
- Softstart: starting steam production;
- Operating: steady operation steam production;
- Low Prod.: low production;
- Washing: cylinder washing in progress.

(**) Activity of the cylinder:

- Cyl.Off: stop steam production (no request or signalling of an alarm);
- Fill: fill valve operating;
- Evaporation: steam production operating;
- Drain: drain pump operating;
- Stop by Al.: steam production stopped by an alarm;
- Inact.Drain: total drain for inactivity;
- Pre-clean: new cylinder washing in progress;
- M. Emptying: manual drain;
- Chk.F.Water: fill water check (from lack of water cylinder alarm);
- Period FI: Periodical drain for dilution.

5.9 "Alarms" screen

Fig. 5.e

Indicates an alarm is active, press to display.

5.9a Main menu

To access press PRG from the main screen
Buttons:

- UP and DOWN: navigation inside the sub-menus, screens, and range of values and settings;
- ENTER: confirm and save the changes made;
- ESC: to go back (pressed repeatedly returns to the "Main" screen).

1. User	1. Keyboard lock	Keyboard lock	
		Enable keyboard lock	
	2. High temp. alarm	Threshold	
		Delay	
		Activate relay	
	3. Clock	Hour	
		Day	
		Month	
		Year	
		Format	
		Week Day	
	4. Scheduler	Scheduler 1/2	
		On/OFF scheduler	
		Scheduler 2/2	
		Set Scheduler	
2. Installer	1. Regolation type	Regolation type (1/3)	
		Working mode	
		Select regolation	
		Signal type	
		Meas. Unit	
		Regolation type (2/3)	
		Probe Configuration	
		Min. Scale:	
		Max. Scale:	
		Offset	
		Weight probe 1	
		Weight probe 2	
		Regolation type (3/3)	
		Regolation param.	
		T. Different.	
		Max Production	
	2. Utilities config.	1.Essence	Essence 1 (1/3)
			Enable output essence 1
			Time ON
			Time OFF
			Name essence 1
			Essence 2 (2/3)
			Enable output essence 2
			Time ON
			Time OFF
			Name essence 2
			Essence 3 (3/3)
			Enable output essence 3
			Time ON
			Time OFF
			Name essence 3
		2.Fans	Fans (1/3)
			FAN SUPPLY
			Enable Fan
			Mode
			Fan threshold
			Turn on delay
			Turn off delay
			Fans (2/3)
			FAN EXTRACT
			Enable Fan
			Mode
			Turn on delay
			Turn off delay
			Fans (3/3)
			DRYING
			Enable drying
			Fans
			Duration
		3.Sanification	Sanification (1/3)
			Enable
			Type
			Cycle time
			Sanification (2/3)
			Sanification time 1
			Supply fan
			Extrac fan
			Steam product.
			Sanificat.Pump
			Sanification (3/3)
			Sanification time 2
			Supply fan
			Extrac fan
			Steam product.
			Sanificat.Pump
		4.Light	Enable Light
			Mode
			Switch off delay
	3. Functional options	Functional options (1/3)	
		CYLINDER DURATION	
		Warning	
		Duration limit	
		SPECIAL FUNCTIONS	
		Time switch-off	
		Emptying due to foam	
		Functional options (2/3)	
		Alarm relay	
		Conducibility limits	
		Functional options (3/3)	
		Wizard at restart	
		Language	
	4.Drain options	Drain options (1/2)	
		Drain if steam request drops (quick reg.)	
		Electrodes off during drain	
		Inactivity drain	
		Inactivity period	
		Drain options (2/2)	
		Percentage timing drain duration	
		Drain freq.	
		Periodical drain	
		Shing periods	
	5. Supervisory	Supervisor (1/2)	
		Ident. number for BMS net	
		Baud rate	
		Protocol	
		Time offline	
		Supervisor (2/2)	
		Enable supervisory ON/OFF	
		Enable supervisory regulation	
	6. GSM	SMS	
		text on mask send SMS	
		mobile number	
		modem status	
		field	
		alarm modem	
3. Maintenance	1. Config. restore	Config.restore (1/2)	
		Save configuration	
		Load configuration	
		Nominal Values	
		Restore default parameter	
		Humidifer type	
		... Kg/h ... V . Ph	

	Config.restore (2/2)
	Delete Alarm History
2. Sys Info	Sys Info
	Code
	Version
	Date
	Bios
	Boot
3. Manual Procedure	Manual Procedure (1/2)
	Manual Procedure
	Contactor
	Fill
	Drain
	Alarm
	Manual Procedure (2/2)
	Supply Fan
	Extrac Fan
	Essence 1
	Essence 2
	Essence 3
	Sanification
	Light
4. Cyl. substitution	Cylinder substitution
	Emptying Cylinder
	Pre-cleaning Cylinder
	Reset hour count.
	Last reset
5. Alarm history	histary deleted

6. USER MENU

From the main screen press:
- PRG to access the main menu,
- ENTER to select and access the menu user.

User menu screens:

1.keyboard lock
2. Alarm Hight temperature
3. Clock
4. Enable scheduler

6.1 Keyboard lock

parameter	enable
Enable keyboard lock ?	YES / NO
For unblock use password	1234 *

* The password can be changed to user choice
If you forget the password 0077 allows access anyway

Note: To lock the keypad from the main screen, press ESC to 2s block occurred at the push of a button any prompts for the password previously set.

6.2 Alarm Hight Temperature

parameter	range	default	U.M
Threshold	Setpoint...100	50	°C
Delay	0…999	0	min
Activate relay	YES/ NO	NO	

6.3 System clock

Used to set the timed activation of the humidifier

parameter	range
hour / min	0 to 23 / 0 to 59
day	1 to 31
month	1 to 12
year	00 to 99
format	dd/mm/yy - mm/dd/yy
week day	Sunday to Saturday

6.4 Enable scheduler

Allows you to set the timer power humidifier and set point variation

Scheduler (1/2)

parameter	enable
scheduler On/Off	YES / NO
set point globale *	°C

* Enabling the programming ON/OFF, shows the value of the setpoint reference face for an hour.

The setpoint reference is to set the main form.

When the time bands are set, the display shows the symbol

Scheduler (2/2)

day : LUN... DOM			
	-- :-- (hh:mm)	OFF , ON , ON+ SET	-- .- (setpoint)
	-- :-- (hh:mm)	OFF , ON , ON+ SET	-- .-(setpoint)
	-- :-- (hh:mm)	OFF , ON , ON+ SET	-- .- (setpoint)
	-- :-- (hh:mm)	OFF , ON , ON+ SET	-- .- (setpoint)
	-- :--(hh:mm)	OFF , ON , ON+ SET	-- .- (setpoint)
	-- :-- (hh:mm)	OFF , ON , ON+ SET	-- .- (setpoint)

it is possible the selection of 3 bands on and off and change the set point within 24h.

Es:

day: LUN			
v	08 : 00	ON + SET	30 . 0 °C
v	09 : 00	ON	setpoint reference
v	12 : 00	OFF	-- . -
v	14 : 00	ON + SET	30 . 0 °C
v	15 : 00	ON	setpoint reference
v	20 : 00	OFF	-- . -

With this configuration:
Mondays
At 8:00 the humidifier is turned on with a setpoint chosen to 30 ° C (warm environment).
At 09:00 passes the set point of reference, see the main form
At 12:00 Is turned off
At 14:00 the humidifier is turned on with a chosen set point of 30 ° C (warm environment).
At 15:00 goes to the set point of reference, see the main form
At 20:00 is Off

Remains off until the ON selection of the next day.

Note: You can copy the same configuration on other days, by pressing the PRG (COPY)

7. INSTALLER MENU

From the main screen press:
- PRG to access the main menu,
- DOWN to select the installer menu,
- ENTER,
- enter the password "77",
- ENTER to confirm and access the installer menu.

Installer menu screens:

1. Regulation type
2. Utilities config.
3.Functional options
4. Drain options
5. Supervisory
6. GSM

To navigate inside the screens:
- UP or DOWN to change the value (within the options/range),
- ENTER to confirm and move the cursor to the next value
- ESC to return to the installer menu.

7.1 Type of control

Setting: type of control, type of signal, unit of measure, and in the models with two cylinders, choice between "parallel sequence" or "series sequence".

Regolation Type (1/3)

parameter	options/range	description
Working mode	MODULATION	steam production modulating
	STEP *	steam production step
Select Regulation	ONE TEMPERATURE PROBE	temperature control with one probe
	PROPORTIONAL	proportional control with signal set from external controller
	TWO TEMPERATURE PROBE	temperature control with two probes (With possibility of adjustment on the average between the two)
	ON/OFF SIGNAL	adjustable thermostat (Appears only if MODE STEP FUNCTION)
Signal type	NTC (default)	
	4/20 mA	
	0/20 mA	
	0/10 V	
	2/10 V	
	0/1 V	
Meas. unit	°C-kg/h (default)	
	°F - lb/hr	

Regolation Type (2/3)
Probe configuration

parameter	range	def.	U.M.
Min. scale (not accessible in ON/OFF control mode)	-100...(Max.scale)	0.0	°C/ °F
Max. scale (not accessible in ON/OFF control mode)	(Min.scale)...250	100.0	°C/ °F
Offset	-10.0...10.0	0.0	°C/ °F
Weight probe 1 (only if selected two probes)	0.... 100	50	%
Weight probe 2 (only if selected two probes)	0.... 100	50	%

Regolation Type (3/3)
Regolation Parameter

parameter	range	default	U.M.
T Differential	1.0 …19.9	2.0	°C
Max. Production	20…100	100	%

7.2 Utilities configuration

1. Essence
2. Fans
3. Sanification
4. Light

Essence 1 (1/3)

parameter	range	default	U.M.
Enable outpout essence 1	YES/ NO	NO	
Time On	0... 60	0	sec
Time Off	0... 999	0	sec
Name	NAME ESSENCE	ESSENCE 1	

Essence 2 (2/3)

parameter	range	default	U.M.
Enable outpout essence 2	YES/ NO	NO	
Time On	0... 60	0	sec
Time Off	0... 999	0	sec
Name	NAME ESSENCE	ESSENCE 2	

Essence 3 (3/3)

parameter	range	default	U.M.
Enable outpout essence 3	YES/ NO	NO	
Time On	0... 60	0	sec
Time Off	0... 999	0	sec
Name	NAME ESSENCE	ESSENCE 3	

The essences are dispensed in steam bath when the humidifier is in production and the temperature reaches 70% of set point.
For example: 50 ° C set point with the essence will be provided when the humidifier is in production and the measured temperature exceeds 35 ° C.

Warning: Make sure the pump is properly connected external essences.

FANS (1/3)

parameter	range	default	U.M.
FAN SUPPLY			
Enable fan	YES/ NO	NO	
Mode	Man…Automatic...Programs	Manual	
Type	Setpoint	Setpoint	
Fan Threshold	0.0 ... 50.0	0.0	°C
Turn on delay	0...199	0	min
Turn off delay	0...199	0	min

In Manual mode, the on / off fan are activated manually by the mask "Rapid Select".
In AUTO mode and type setpoint, the fan is only active when you are in the production of steam, with delays switched on or off, selectable. It 'can set a temperature threshold below which the fan is still active even though the production of steam.
In AUTO mode and type PROGRAMS (active only if scheduler enabled), the fan remains on during all sections of humidifier ON and OFF switched off during the scheduler. If the steam bath temperature is below the threshold, the fan is not active ongi case.

FANS (2/3)

parameter	range	default	U.M.
EXTRACT FAN			
Enable fan	YES/ NO	NO	
Mode	Man…Automatic	Manual	
Type	Setpoint...Periodic	Setpoint	
T ON: T OFF:	0...199	0	min
Turn on delay	0...199	0	min
Turn off delay	0...199	0	min

In Manual mode, the on / off fan are activated manually by the "Rapid Selection" screen.
In AUTO mode and type setpoint, the fan turns off when you are in the production of steam, with delays switched on or off, selectable.

In AUTO mode and type PERIODIC, the fan operation is independent of steam but is active for the ON time (T ON) and off to the OFF time (T OFF) selectable.

In AUTO mode and type Programs (active only if scheduler enabled), the fan remains on during all sections of humidifier ON and OFF switched off during the scheduler.

FANS (3/3)

parameter	range	default	U.M.
DRYING			
Enable drying	YES/ NO	NO	
Fans	IMMISSION EXTRACT IMM.+EXT.	EXHAUST	
Duration	0...199	0	min

Drying, if enabled, activates the fans selected whenever you select the screen off steam "Rapid Selection" or time slot after the last day of ON (if enabled scheduler).

SANIFICATION (1/3)

parameter	range	default	U.M.
Enable	YES/ NO	NO	
Type	Manual [1]...Automatic[2]	Man	
Cycle time			
T1: T2:	0...199	0	min

[1] THE MANUAL mode activation is performed by screen "Rapid Selection"
[2] THE AUTOMATIC mode activation occurs at the end of the last time schedule daily ON

Note: T1 and T2 are respectively the duration of Time 1 and the duration of Time 2 described in the forms listed below:

SANIFICATION (2/3)

parameter	range	default	U.M.
Sanification Time1			
Supply fan	ON... OFF	OFF	
exaust fan	ON... OFF	OFF	
steam production	0...100	100	%
sanification pump	ON... OFF	OFF	

SANIFICATION (3/3)

parameter	range	default	U.M.
Sanification Time2			
Supply fan	ON... OFF	OFF	
exaust fan	ON... OFF	OFF	
steam production	0...100	100	%
sanification pump	ON... OFF	OFF	

LIGHT

parameter	range	default	U.M.
Enable light	YES/ NO	NO	
Mode	Manual [1]...Automatic[2	Man	
Switch off Delay	0... 199	0	min

[1] The activation mode is manually performed by screen " Rapid Selection"
[2] In AUTO mode the light stays on until the end of the last time slot daily ON, then turns off with any delay, selectable.
The light may be off the screen " Rapid Selection" even if in automatic mode.

7.3 Functional options

Functional options (1/3)

parameter	range	default	U.M.	description
cylinder duration				
warning *	YES/NO	YES		
Duration limit	0,...,4000	3000	hours	
SPECIAL FUNCTIONS				
Time switch- OFF	0...120	0	s	used to delay the stop in production when there is no steam request
Emptying due to foam	YES/NO	NO		

* The cylinder warning period, if enabled, the display used to indicate the need to replace the cylinder after the hours set (Duration limit).

Functional options (2/3)

parameter	range	default	U.M.
ALARM RELAY			
alarm relay logic	NA/NC	NA	
Pulse al.relay	YES/NO	NO	
SOGLIA CONDUCIBILITY			
Pre-alarm	0... (value alarm)	1000	uS/cm
Alarm	(value pre-alam)....2000	1250	uS/cm

Functional options (3/3)

parameter	range	def.	U.M.
Wizard at restart	YES/NO	NO	
Language	language		

7.4 Drain options

For details about these features, refer to cap.14

Drain options (1/2)

parameter	range	default	UOM	description
Drain if steam request drops (quick req.)	YES/NO	YES		
Electrodes off during drain	YES/NO	YES		
Inactivity drain	YES/NO	YES		
Inactivity period	1 to 199	3	d (days)	

Drain options (2/2)

parameter	range	default	UOM
Percentage timing Drain duration	50 to 200	100	%
Drain freq.	50 to 200	100	%
Periodical drain	YES/NO	NO	
Washing periods	1 to 120	24	h (hours)

7.5 Supervisory

Supervisory (1/2)

parameter	range	def.	UOM
ident. number for BMS net	0 to 200	1	
Baud rate	1200, 2400, 4800, 9600, 19200	19200	Bps
Protocol	CAREL, MODBUS, LON, RS232, GSM(*), WINLOAD	CAREL	
Time offline	YES/NO	NO	

(*) By setting the GSM protocol, when alarms are activated the humidifier sends an SMS (short message service) to the mobile telephone number set.

Supervisory (2/2)

parameter	range	def.	UOM
Enable supervisory on-off?	YES/NO	NO	
Enable supervisory regulation?	YES/NO	NO	

Important: to send an SMS, the humidifier must be fitted with the electronic board code PCO100MDM0, the GSM modem kit code PLW0PGSM00, and a SIM card in the modem (see par. "GSM network connection" page 17).

7.6 GSM

"SMS" configuration procedure

- set the GSM protocol from the "Supervisor" screen (see "Supervisor" screen > "Protocol");
- press ENTER until the cursor is at the start of the screen;
- press the DOWN button and access the "SMS" screen;
- configure the "SMS" screen:

SMS		
parameter	range	default
text on mask send SMS	enter text(*)	CAREL HUMISTEAM
mobile number	enter mobile phone number (*)	-
modem status (display only)		
parameter	display	default
field	percentage of signal	-
alarm modem	NO/YES	-

(*) Text characters:

A	B	C	D	E	F	G	H	I	J	K	L
M	N	O	P	Q	R	S	T	U	V	W	X
Y	Z	0	1	2	3	4	5	6	7	8	9
+	-	*	:	;	,	(	)	/	#	%	

Function buttons:

- UP or DOWN to select the characters;
- ENTER to save and move the cursor to the next character.

Important: the humidifier only has one communication line (baud rate and protocol). When enabling SMS messages, a supervisory network can not be created (and vice-versa).

Important:

- only use numeric characters;
- disable the PIN code on the SIM card;
- messages can only be sent in SMS format;
- the SMS messages are subject to the charges and conditions of the SIM card network operator.

CAREL declines all liability for the failure to send or receive SMS.

8. MAINTENANCE MENU

Important: the operations described in this menu must only be carried out by qualified personnel.

From the main screen press:
- PRG to access the main menu,
- DOWN to select the Maintenance menu,
- ENTER,
- UP or DOWN to enter the password "77",
- ENTER to confirm and access the Maintenance menu.

Maintenance menu screens:

1. Config. restore
2. System info
3. Manual procedure
4. Cylinder substitution
5. Alarm history

8.1 Config. resore

Functions:
- save the set configuration,
- load the saved configuration,
- restore default parameters,
- display the type of humidifier

Config. Restore (1/2)

parameter	range	UOM
save configuration	YES/NO	
load configuration	YES/NO	
Default Parameter		
recall Default Parameter	YES/NO	
humidifier type	xxx Kg/h xxx V x-ph	kg/h, V, ph

Config. Restore (2/2)

parameter	range	UOM
Delete Alarm history	YES/NO	

8.2 System info

Functions:
- display the code and version of the application installed;

parameter	display/range
Code	read-only
Version	read-only
Date	read-only
Bios	read-only
Boot	read-only

8.3 Manual procedure

Important: these operations must only be performed by qualified personnel, incorrect use may cause serious damage.

These procedures are used to manually test the main functions and operations of the humidifier:
- closing of the contactor/contactors
- opening of the water fill valve
- activation of the drain pump
- alarm relay
- activation fans,essences,light, pump sanification

Manual procedure (1/2)

parameter	display/range
manual procedure	Y/N
Contactor	ON/OFF
fill	ON/OFF
drain	ON/OFF
alarm relay	ON/OFF

Manual procedure (2/2)

parameter	display/range
Supply fan	ON/OFF
exaust fan	ON/OFF
Essence 1	ON/OFF
Essence 2	ON/OFF
Essence 3	ON/OFF
Sanification	ON/OFF
light	ON/OFF

8.4 Cylinder substitution

Complete the following procedure before changing the cylinder:

parameter	range
Cylinder replacement	
empty cylinder	YES/NO
Pre-cleaning cylinder	YES/NO
Reset hour count.	YES/NO
last reset	dd/mm/yy

8.5 Alarm history

Recorded trace of the alarms (events) that have been activated. The humidifier memory can record up to 200 events (complete with description and date, press DOWN to scroll the list).

parameter	display
Alarm	event description
Time	hh:mm
Date	dd/mm/yy

9. TABLE OF ALARMS

When an alarm is activated, the alarm button starts flashing intermittently. In these conditions, pressing the alarm button once displays the type of alarm (and the code, in line with the CAREL humidifier standard).

In the case of potentially dangerous alarms, the controller automatically stops the production of steam. For some alarm events, the alarm relay is also activated at the same time as the signa (see the table below).

Once the causes of the alarm are no longer present, the humidifier and the alarm relay output can be reset automatically or manually, according to the type of fault, while the message displayed is reset manually (see the table below). Even if no longer active, the alarm status continues to be displayed until the "reset display" button is pressed.

Active alarm states cannot be reset.
If more than one alarm is active, the display shows all the codes in sequence, after having pressed the alarm button once and then pressing the "UP" or "DOWN button.

alarms displayed	meaning	cause	solution	reset	alarm relay	consequence
Alarm: EP Low Production (Cylinder Off)	Low production alarm	excessive reduction in production	cylinder completely depleted or water with excessive foam. Perform maintenance on the cylinder	Manual	active	Stop production
Alarm: EF Lack of water (Cylinder Off)	No water	no supply water	1. check that the supply hose from the mains to the humidifier and the internal hoses are not blocked or choked and that there is sufficient pressure (0.1 to 0.8 MPa, 1 to 8 bar); 2. check the operation of the fill solenoid valve; 3. check that the steam outlet is not operating with excessive backpressure, preventing the flow of water into the cylinder by gravity; 4. check that the steam outlet hose is not choked and that there are no pockets of condensate	Automatic (automatic water return procedure) (see par. 4.4.10) Manual	active	Stop production
Alarm: Ed Drain alarm (Cylinder Off)	Drain alarm	drain malfunction	check the water drain circuits and the correct operation of the electric drain pump, and check the condition of the filter inside the cylinder	Manual	active	Stop production
Alarm: EL Low current (Cylinder Off)	Low current alarm	power not available; when the unit is activated no steam is produced	with the unit off and disconnected from the mains, check the electrical connections inside	Manual	active	Stop production
Alarm: EH High current(Cylinder Off)	High current alarm	excess current in the electrodes; probable fault with the electrodes or water temporarily too conductive (especially when restarting after a short stop)	1. check the operation of the electric drain pump; 2. check the seal of the supply solenoid valve when not energised; 3. drain some of the water and restart. 4. check for bridges between the electrodes. 5. cylinder replacement and/or maintenance	Manual	active	Stop production
Alarm: EC High conductivity (Cylinder Off)	High conductivity alarm	high conductivity of the supply water	1. check the limit threshold set; 2. switch the unit off and clean the electrodes that measure of the conductivity of the water; if the problem persists, change the origin of the supply water or use a suitable treatment system (partial demineralisation). N.B.: the problem is not resolved by softening the supply water..	Manual	active	Stop production
Warning: Ec High conductivity	High supply water conductivity pre-alarm	high water conductivity alarm warning	1. check the conductivity of the supply water, if necessary use a suitable treatment system. N.B.: the problem is not resolved by softening the supply water	Automatic	not active	signal only
Warning: E= High temperature	high temperature pre-alarm	high temperature probe temperature	check the operation of the probe and the high temperature parameter	Automatic	selectable	signal only.
Alarm: E3 one probe fault or offline	one probe disconnected alarm	one probe not connected	check the connection of the probe, and the setting of the parameters (probe type and signal type)	Automatic	active	Stop production
Alarm: E4 second probe fault or offline	second probe disconnected alarm	second probe not connected	check the connection of the probe, and the setting of the parameters (probe type and signal type)	Automatic	not active	Stop production

Warning: EA Foam Cylinder	Foam alarm	excessive foam in the cylinder when boiling	1. flush the water supply lines; 2. clean the cylinder, make sure a softener is not used (if so, use another source of water or reduce the softening).	Manual	not active	signal only
Warning: CP Pre-exhaustion cylinder	Cylinder being depleted	signal that the cylinder life is ending	perform maintenance and/or replace the cylinder	Manual	not active	signal only
Alarm: EU Cylinder full	Cylinder full	signal that the cylinder is full with the unit off	with the unit off: 1. check for any leaks from the fill solenoid valve or the condensate return from the hose, check that the level sensors are clean	Manual	active	Stop production
Warning: CL Exhaustion cylinder	Cylinder depleted	cylinder depleted signal	perform maintenance and/or replace the cylinder	Manual	active	Stop production
Warning: CY Cylinder Maintenance Recommended	Maintenance recommended	cylinder good operating hour limit exceeded	perform maintenance and/or replace the cylinder	Manual (reset counter. See Maintenance menu)	not active	signal only.
Alarm: Mn Cylinder Maintenance Mandatory	Maintenance required	maximum cylinder operating hours exceeded	replace the cylinder	Manual (reset counter. See Maintenance menu)	active	Stop production
Clock Board Fault	Clock error	backup battery completely discharged or general problem with the clock	replace the controller	Manual	not active	signal only
Alarm: utility board 1 or 2	utility board offline or Fault	utility board offline or Fault	- connect the board missing - utility disable functions on the alarm signal	Automatic	active	signal only
Alarm Supervisor offline no request	Alarm Supervisor disconnected	not connected	Check the connection between the connector J19 Supervisor and Control Board	Automatic	active	Stop production

Tab. 9.a

OFF Cylinder = cylinder is not able to produce steam.

The alarm button performs a number of actions, depending on how many times it is pressed.

Action/Pressing the button	Effect
first time	display the alarm code; if more than one alarm is active at the same time, the screen shows NEXT, and the sequence of alarm codes can be scrolled using the DOWN button.
second time	the cause of the alarm has been resolved, the alarm is no longer displayed, the corresponding relay is deactivated and the display shows: NO ACTIVE ALARMS
third time	return to the main screen

Tab. 9.b

If the causes of the alarm persist, the alarm is not reset.

10. MAINTENANCE AND SPARE PARTS

10.1 Spare parts for models UE001 to UE018

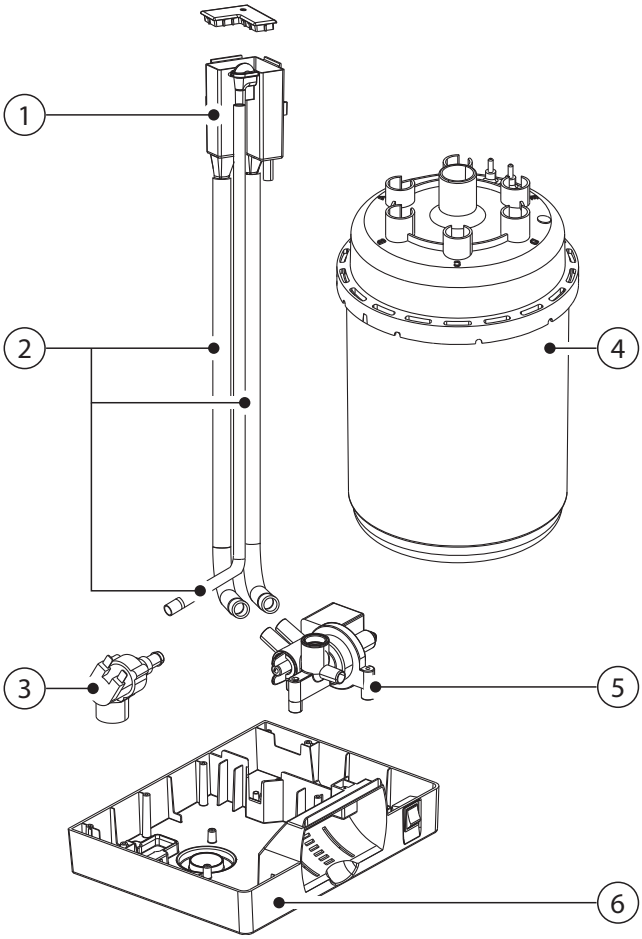

Fig. 10.a

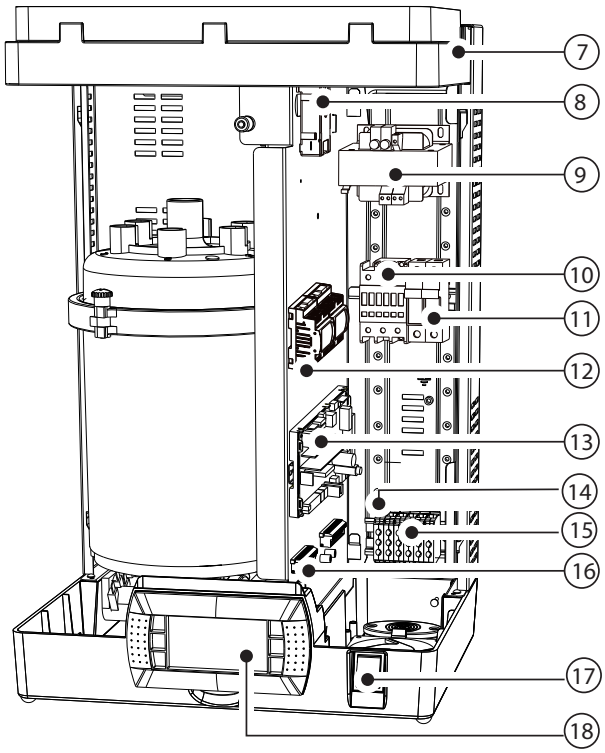

Fig. 10.b

Key

1 fill tank
2 internal tubing kit
3 fill solenoid valve kit
4 cylinder
5 manifold with drain pump
6 plastic base
7 plastic humidifier top
8 TAM (transformer for measuring the current)
9 transformer
10 contactor
11 fuse holder F1-F2
12 pCOe expansion board (controller I/O expansion)
13 electronic controller
14 fuse holder F3
15 power terminals
16 utility terminal block
17 switch
18 terminal with display

Table of water circuit, electrical and electronic spare parts, UE001 to 018

description	spare part code								position	fig.
	UE001	UE003	UE005	UE008	UE009	UE010	UE015	UE018		
Water circuit										
Fill tank + conductivity meter	UEKVASC100								1	11.a
Fill solenoid valve kit	KITVC10006				KITVC10011				3	11.a
Internal tubing kit	UEKT10000M								2	11.a
Plastic humidifier base	UEKBOTTOM0								6	11.b
Plastic humidifier top	UEKTOP0000								7	11.a
Assembled f/d manifold + 230 V pump	UEKDRAIN01								5	11.a
Electrical and electronics										
Display terminal	HCT1EWW000								18	11.b
TAM (current transformer)	UEKTAM0000								8	11.b
Contactor	UEKCONT300		UEKCONT400						10	11.b
Trasformatore alimentazione: 230-400/24 V	UEKTR30000								9	11.b
Controllo elettronico (1)	UEWzzv00xi(2)								13	11.b
pCOe expansion board (controller I/O expansion)	PCOE00TLN0								12	11.b
Fuse holder (F1,F2)	URKFH10000								11	11.b
Fuse holder (F3,F5,F6,AP1,AP2)	UEKFH10000								14	11.b
F1 - F2 230 to 400 Vac power fuses	UEKFUSE100								-	see electrical diagram
F5 - F6 Fusibile pCOe	0605615AXX								-	see electrical diagram
AP1 - AP2 Morsetto fusibile	0605595AXX								-	see electrical diagram
F3 Pump fuse	UEKFUSE200								-	see electrical diagram
F4 Transformer secondary fuse	UEKFUSE400								-	see electrical diagram
Connection cable between terminal and electronic controller	S90CONN002								-	

Tab. 10.a

(1) To make an order specify the complete product code and the serial number of your humidifer.

(2) zz: board version
0A: basic version up to UE65 model
01,.....,65 kg/h
v: voltage
x: revision
i: 0 single packing; 1: multiple packing

Table of spare part codes, single-phase cylinders UE001 to 009, electrode and gasket kit

Model		UE001	UE003	UE005	UE009
STANDARD disposable cylinders	200/230 Vac 1~, conductivity 350 to 1250 µS/cm	BL0S1F00H2	BL0S1F00H2	BL0S2E00H2	BL0S3F00H2
SPECIAL disposable cylinders	200/230 Vac 1~, conductivity 75 to 350 µS/cm	BL0S1E00H2	BL0S1E00H2	BL0S2E00H2	BL0S3E00H2
SPECIAL openable cylinders	200/230 Vac 1~, conductivity 75 to 350 µS/cm	BLCS1E00W2	BLCS1E00W2	BLCS2E00W2	BLCS3E00W2
	200/230 Vac 1~, conductivity 350 to 1250 µS/cm	BLCS1F00W2	BLCS1F00W2	BLCS2E00W2	BLCS3F00W2
Electrode and gasket kit	200/230 Vac 1~, conductivity 75 to 350 µS/cm	KITBLCS1E2	KITBLCS2E2	KITBLCS2E2	KITBLCS3E2
	200/230 Vac 1~, conductivity 350 to 1250 µS/cm	KITBLCS1F2	KITBLCS2F2	KITBLCS2E2	KITBLCS3F2
Filter gasket kit		KITBLC1FG0	KITBLC2FG0	KITBLC2FG0	KITBLC3FG0

Tab. 10.b

Table of spare part codes, three-phase cylinders UE003 to 018, electrode and gasket kit

Model		UE003	UE005	UE008	UE010	UE015	UE018
STANDARD disposable cylinders	200/230 Vac 3~, conductivity 350 to 1250 µS/cm	BL0T1B00H2	BL0T2A00H2	BL0T2A00H2	BL0T3A00H2	BL0T3A00H2	--
	400 Vac 3~, conductivity 350 to 750 µS/cm	BL0T1C00H2	BL0T2C00H2	BL0T2C00H2	BL0T3C00H2	BL0T3C00H2	BL0T3C00H2
SPECIAL disposable cylinders	200/230 Vac 3~, conductivity 75-350 µS/cm	BL0T1A00H2	BL0T2A00H2	BL0T2A00H2	BL0T3A00H2	BL0T3A00H2	--
	400 Vac 3~, conductivity 75 to 350 µS/cm	BL0T1A00H2	BL0T2B00H2	BL0T2B00H2	BL0T3B00H2	BL0T3B00H2	BL0T3B00H2
	400 Vac 3~, conductivity 750 to 1250 µS/cm	BL0T1D00H2	BL0T2D00H2	BL0T2D00H2	BL0T3D00H2	BL0T3D00H2	BL0T3D00H2
SPECIAL openable cylinders	200/230 Vac 3~, conductivity 75-350 µS/cm	BLCT1A00W2	BLCT2A00W2	BLCT2A00W2	BLCT3A00W2	BLCT3A00W2	--
	400 Vac 3~, conductivity 75 to 350 µS/cm	BLCT1A00W2	BLCT2B00W2	BLCT2B00W2	BLCT3B00W2	BLCT3B00W2	BLCT3B00W2
	400 Vac 3~, conductivity 350 to 750 µS/cm	BLCT1C00W2	BLCT2C00W2	BLCT2C00W2	BLCT3C00W2	BLCT3C00W2	BLCT3C00W2
	400 Vac 3~, conductivity 750 to 1250 µS/cm	BLCT1D00W2	BLCT2D00W2	BLCT2D00W2	BLCT3D00W2	BLCT3D00W2	BLCT3D00W2
Electrode and gasket kit	Electrode kit 200/230 Vac 3~, 75/350 µS/cm	KITBLCT1A2	KITBLCT2A2	KITBLCT2A2	KITBLCT3A2	KITBLCT3A2	--
	Electrode kit 200/230 Vac 3~, 350/1250 µS/cm	KITBLCT1B2	KITBLCT2A2	KITBLCT2A2	KITBLCT3A2	KITBLCT3A2	--
	Electrode kit 400 Vac 3~, 75/350 µS/cm	KITBLCT1A2	KITBLCT2B2	KITBLCT2B2	KITBLCT3B2	KITBLCT3B2	KITBLCT3B2
	Electrode kit 400 Vac 3~, 350/750 µS/cm	KITBLCT1C2	KITBLCT2C2	KITBLCT2C2	KITBLCT3C2	KITBLCT3C2	KITBLCT3C2
	Electrode kit 400 Vac 3~, 750/1250 µS/cm	KITBLCT1D2	KITBLCT2D2	KITBLCT2D2	KITBLCT3D2	KITBLCT3D2	KITBLCT3D2
	Filter gasket kit	KITBLC1FG0	KITBLC2FG0	KITBLC2FG0	KITBLC3FG0	KITBLC3FG0	KITBLC3FG0

Tab. 10.c

10.2 Spare parts for models UE025 to UE065

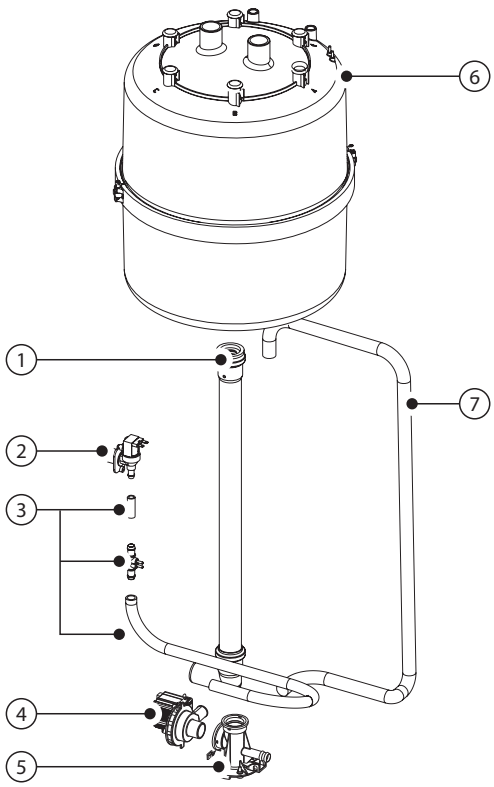

Fig. 10.c

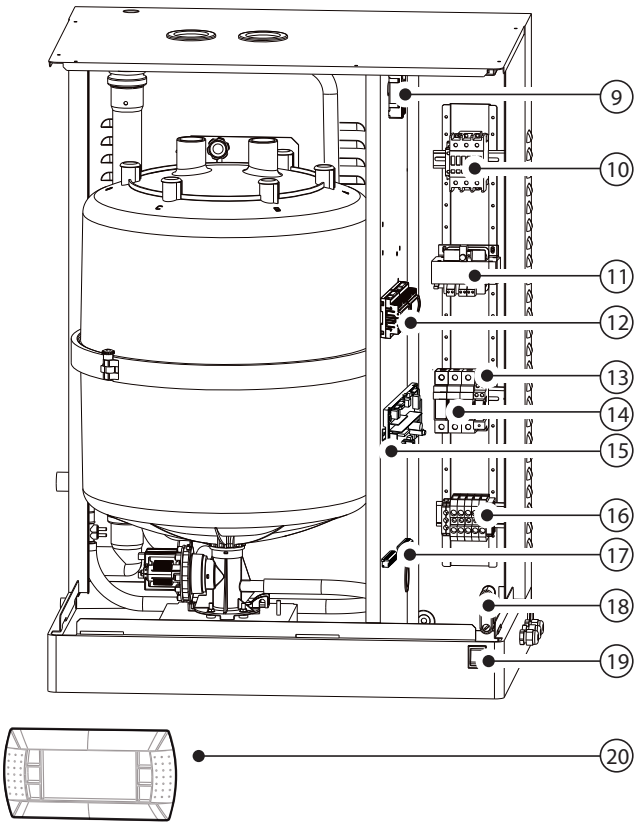

Fig. 10.d

Key:

1 drain circuit
2 fill solenoid valve kit
3 internal tubing kit
4 conductivity meter
5 drain pump kit
6 manifold
7 drain pump hose
8 cylinder
9 TAM (transformer for measuring the current)
10 contactor
11 transformer
12 pCOe expansion board (controller I/O expansion)
13 pump control relay
14 fuse holder
15 electronic controller
16 utility terminal block
17 power terminals
18 cable clamp
19 switch
20 terminal with liquid crystal display (fitted on the cover of the electrical compartment)

Table of water circuit, electrical and electronic spare parts, UE025 to UE065

Description	Spare part code				position	figure
	UE025	UE035	UE045	UE065		
Water circuit						
Drain pump hose	UEKDH00000				7	11.c
Manifold	UEKCOLL000				6	11.c
Drain pump kit	KITPSE0000				5	11.c
Internal tubing kit	UEKT10000L			UEKT1000XL	3	11.c
Kit double check valve	FWHDCV0000				-	
Conductivity meter kit	KITCN00000				4	11.c
Fill solenoid valve kit	KITVC10058			KITVC10070	2	11.c
Drain circuit	UEKDC00000			UEKDC10000	1	11.c
Electrical and electronics						
Display terminal	HCT1EWF000				20	11.d
pCOe expansion board (controller I/O expansion)	PCOE00TLN0				12	11.d
TAM (current transformer)	UEKTAM0000				9	11.d
Contactor	UEKCONT400	UEKCONT500		URKCONT300	10	11.d
Power transformer: 230/400-24V	UEKTR30000				11	11.d
Electronic controller [1]	UEWzzv00xi[2]				15	11.d
Fuse holder	URKFH20000				14	11.d
Pump control relay	URKFUSE300				13	11.d
F3 Pump fuse	URKFUSE300				-	see electrical diagram
F4 Transformer secondary fuse	URKFUSE300				-	see electrical diagram
F5-F6 pCOe fuse	UEKFUSE400				-	see electrical diagram
AP1-AP2 terminal fuse	0605615AXX				-	see electrical diagram
PF1 controller fuse	0605595AXX				-	see electrical diagram
Connection cable between terminal and electronic controller	0605604AXX				-	
Cavo di collegamento tra terminale e controllo	S90CONN002				-	

Tab. 10.d

[1] To make an order specify the complete product code and the serial number of your humidifer.

[2] zz: board version
0A: basic version up to UE65 model
01,.....,65 kg/h
v: voltage
x: revision
i: 0 single packing; 1: multiple packing

Table of spare parts for standard and special cylinders UE025 to UE065

Description		UE025	UE035	UE045	UE065
STANDARD disposable cylinders	200/230 V 3ph cylinder, conductivity 350 to 1250 µS/cm	BL0T4C00H2	BL0T4B00H2	BL0T5A00H1	-
	400 V 3ph cylinder, conductivity 350 to 1250 µS/cm	BL0T4D00H2	BL0T4D00H2	BL0T4C00H2	BL0T5C00H0
SPECIAL disposable cylinders	200/230 V 3ph cylinder, conductivity 75 to 350 µS/cm	BL0T4B00H2	BL0T4B00H2	BL0T5A00H1	--
	400 V 3ph cylinder, conductivity 75 to 350 µS/cm	BL0T4C00H2	BL0T4C00H2	BL0T4B00H2	BL0T5B00H0
SPECIAL openable cylinders	200/230 V 3ph cylinder, conductivity 75 to 350 µS/cm	BLCT4B00W2	BLCT4B00W2	BLCT5A00W1	--
	200/230 V 3ph cylinder, conductivity 350 to 1250 µS/cm	BLCT4C00W2	BLCT4B00W2	BLCT5A00W1	--
	400 V 3ph cylinder, conductivity 75 to 350 µS/cm	BLCT4C00W2	BLCT4C00W2	BLCT4B00W2	BLCT5B00W0
	400 V 3ph cylinder, conductivity 350 to 1250 µS/cm	BLCT4D00W2	BLCT4D00W2	BLCT4C00W2	BLCT5C00W0
Electrode and gasket kit	200/230 V 3ph cylinder, conductivity 75 to 350 µS/cm	KITBLCT4B2	KITBLCT4B2	KITBLCT5A0	--
	200/230 V 3ph cylinder, conductivity 350 to 1250 µS/cm	KITBLCT4C2	KITBLCT4B2	KITBLCT5A0	--
	400 V 3ph cylinder, conductivity 75 to 350 µS/cm	KITBLCT4C2	KITBLCT4C2	KITBLCT4B2	KITBLCT5B0
	400 V 3ph cylinder, conductivity 350 to 1250 µS/cm	KITBLCT4D2	KITBLCT4D2	KITBLCT4C2	KITBLCT5C0
Gasket and filter kit		KITBLC4FG0	KITBLC4FG0	KITBLC4FG0	KITBLC5FG0

Tab. 10.e

10.3 Cleaning and maintenance of the cylinder

Replacement

Important: the cylinder must be only be replaced by qualified personnel, and with the humidifier unplugged from the power supply.

In normal conditions, the disposable cylinders should be replaced after one year (or 2500 hours of operation, if cleaned periodically), while the openable cylinders last 5 years (or 10,000 hours of operation, if cleaned periodically). They must be replaced immediately – even before the specified intervals – if any anomalies occur. For example, when the lime scale inside the cylinder prevents the correct flow of electric current.

Replacement procedure:

1. empty all the water (cylinder replacement procedure, see maintenance menu);
2. turn off the humidifier (switch "0"), and open the mains disconnect switch on the power supply (safety procedure);
3. wait for the humidifier and the cylinder to cool down;
4. remove the front cover;
5. disconnect the electrical cables from the cylinder and steam hose;
6. release the cylinder from the locking device and lift it to remove it;
7. insert the new cylinder (make sure that the model and the power supply of the new cylinder correspond to the rated data);
8. fasten the cylinder;
9. reconnect the electrical cables to the cylinder;
10. replace the front cover;
11. switch on the humidifier;
12. reset cylinder operating hour counter (see maintenance menu);
13. Activate the wash new cylinder procedure (see maintenance menu).

10.4 Mechanically draining the water in the cylinder

Drain due to gravity without activating the humidifier, recommended if:

- humidifier decommissioned;
- to empty the cylinder without switching the humidifier on.

Mechanical drain:

- make sure that the humidifier is not powered;
- remove the cover (see page XX);
- activate the mechanical device under the cylinder (see the figure below).

Models UE001 to UE018 Models UE025 to UE065

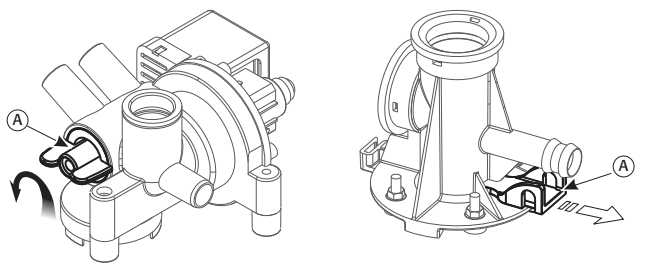

Fig. 10.e

Periodical checks

- After one hour of operation: check for any significant water leaks.
- Every 15 days or no more than 300 operating hours: check operation, the absence of significant water leaks, the general conditions of the casing. Check that during operation there are no arcs or sparks between the electrodes.
- Every 3 months or no more than 1000 operating hours:
  - disposable cylinders: check operation, the absence of significant water leaks and if necessary replace the cylinder;
  - openable cylinders: if there are significantly blackened areas, check the deposits on the electrodes and clean them, using the specific electrode and gasket kit.
- Every year or no more than 2500 operating hours:
  - disposable cylinders: replace;
  - openable cylinders: if there are significantly blackened areas, check the deposits on the electrodes and clean them, using the specific electrode and gasket kit.
- After 5 years or no more than 10,000 operating hours: replace the openable cylinder.

After extended operation, or when using water rich in salts, the solid deposits that naturally form on the electrodes may grow until attaching to the inside wall of the cylinder. If these deposits are conductive the heat generated may overheat the plastic until it melts, with the risk of very hot water being released.

Important: In the event of water leaks, disconnect the power supply from the humidifier as the water may conduct electricity.

10.5 Cylinder connection, three-phase models UE001 to UE065

production (kg/h)	conductivity (µS/cm)	power supply (V)	
		230	400
25	75/350 µS/cm	A	B
	350/1250 µS/cm	B	B
35	75/350 µS/cm	A	B
	350/1250 µS/cm	A	B
45	75/350 µS/cm	A	A
	350/1250 µS/cm	A	B
65	75/350 µS/cm	/	A
	350/1250 µS/cm	/	B

Tab. 10.f

The cable ends must be tightened with the top nut to 3 Newton • m. (units with BL*T5* cylinder only)

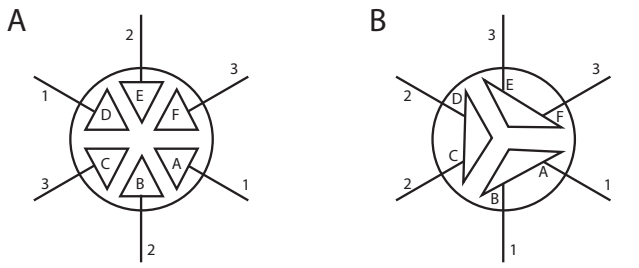

Fig. 10.f

Three-phase and sigle-phase models UE01 to UE018

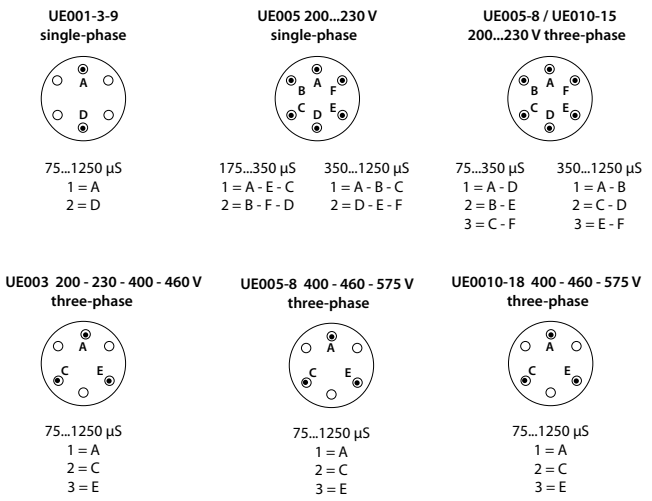

Fig. 10.g

10.6 Cleaning and maintenance of the other components

Important:

- when cleaning plastic components do not use detergents or solvents;
- scale can be removed using a solution of 20% acetic acid and then rinsing with water.

Maintenance checks on other components:

- ☐ fill solenoid valve. After having disconnected the cables and the tubing, remove the solenoid valve and make sure the inlet filter is clean; if necessary, clean with water and a soft brush;
- ☐ manifold with drain pump. Check that there are no solid residues in the cylinder attachment, remove any impurities. Check that the gasket (o-ring) is not damaged or cracked, replace if necessary. Check that there are no solid residues in the drain hose;
- ☐ drain pump. Disconnect the power supply, remove the pump and clean any impurities. Clean the tank from any deposits and check that the water flows freely from the tank to the drain (corresponding to the drain pump);
- ☐ fill tank. Check that there are no obstructions or solid particles and that the conductivity measuring electrodes are clean, remove any impurities and rinse;
- ☐ internal tubing kit. Check that the pipes and hoses are free and clear of impurities, remove any impurities and rinse.

Important: after having replaced or checked the water circuit, make sure that the connections are tight. Restart the unit and run a number of fill and drain cycles (from 2 to 4), after which, applying the safety procedure, check for any water leaks.

Fuses in the auxiliary circuits

Fuses	UE001 to 018	UE 025 to 065
F1 e F2	4 Afast-blow, 10,3x38	1 A fast-blow, 10,3x38
F3	1 A fast-blow, 5x20 ceramic	1 A fast-blow, 10,3x38
F5 e F6	1 A T slow-blow 5x20 glass	1 A T slow-blow 5x20 glass
AP1 e AP2	6,3 A T slow-blow 5x20 ceramic	6,3 A T slow-blow 5x20 ceramic
fusibile controllo PF1	2 A T slow-blow5x20 glass (min. size cable 1,5 mm^2)	2 A T slow-blow 5x20 glass (min. size cable 1,5 mm^2)

Tab. 10.g

11. WIRING DIAGRAMS

11.1 Diagram of single-phase models UE001 to UE009

Key:

TB	terminal block	TR	transformer	LS	high level electrodes
K	contactor	MS	manual switch	CS	conductimeter
F1-F2	primary fuses	FV	fill valve	F5-F6	PCOe fuses
F3	fuse protection drain pump	DP	drain pump	TAM	external TAM
F4	secondary fuses				

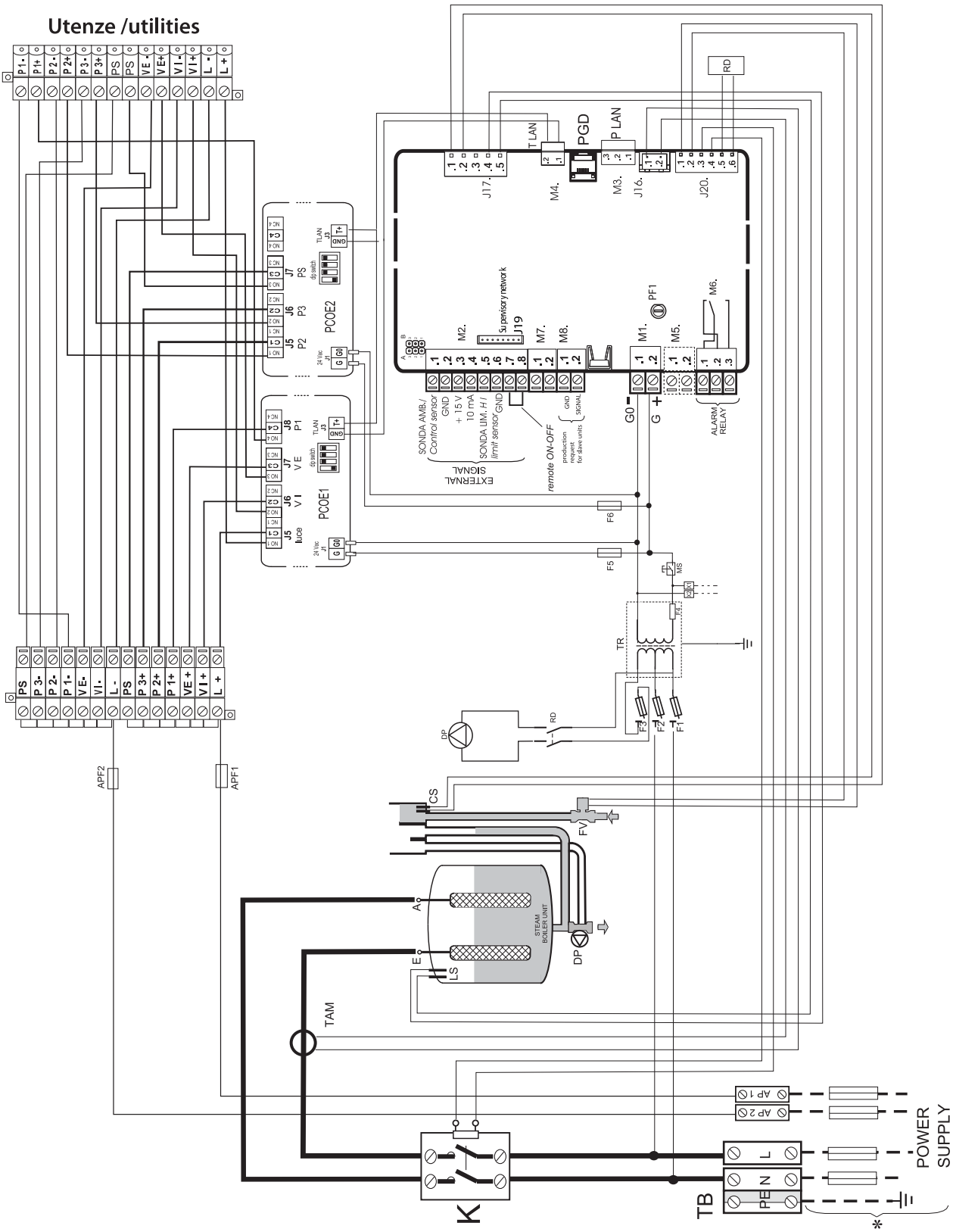

Fig. 11.a

(**) Attention: for TAM configurations and connections see par. 12.1

11.2 Diagram of three-phase models UE003 to UE018

key:

TB	terminal block	TR	transformer	LS	high level electrodes
K	contactor	MS	manual switch	CS	conductimeter
F1-F2	primary fuses	FV	fill valve	F5-F6	PCOe fuses
F3	fuse protection drain pump	DP	drain pump	TAM	external TAM
F4	secondary fuses				

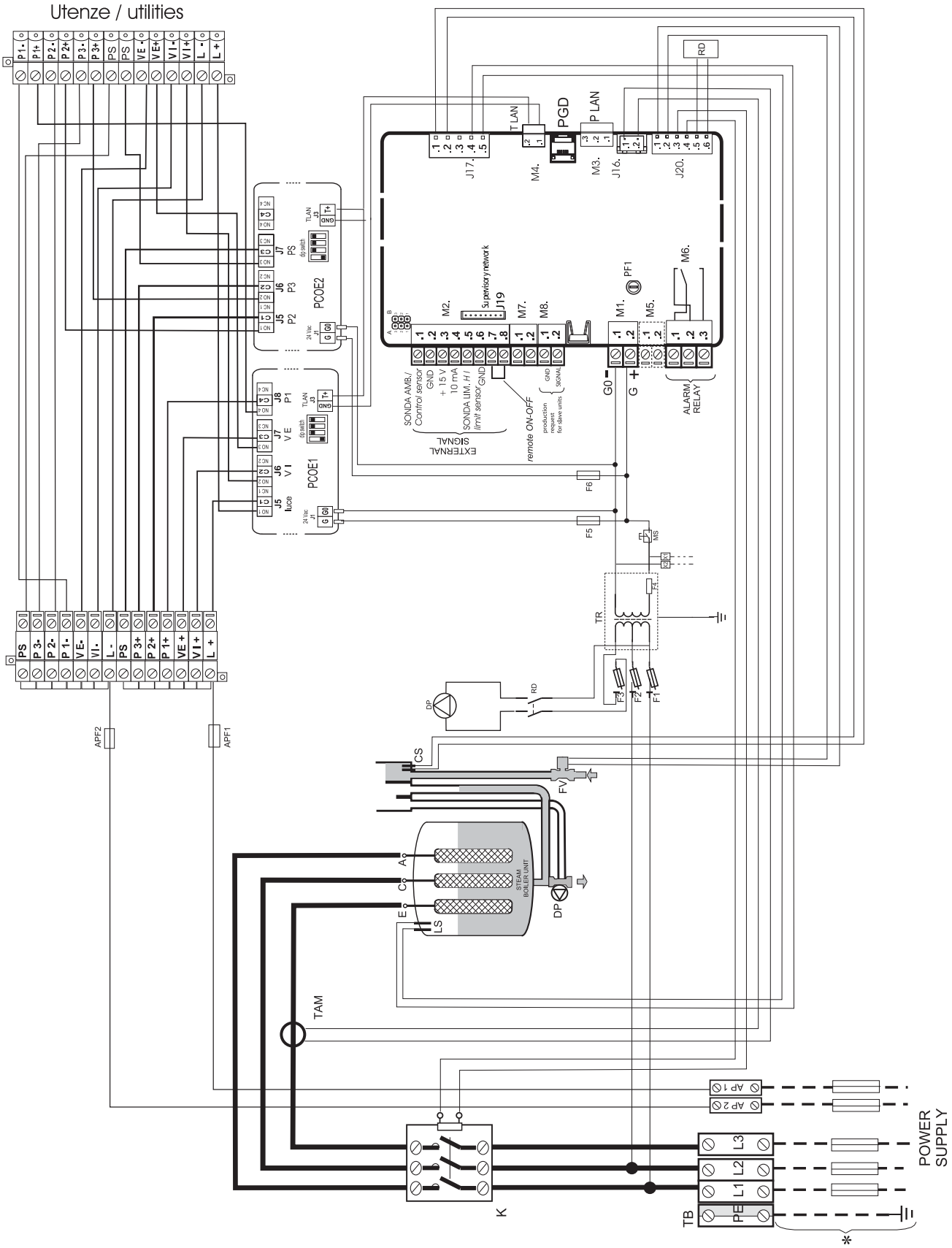

Fig. 11.b

(**) Attention: for TAM configurations and connections see par. 12.1

11.3 Diagram of three-phase models UE025 to UE065

Key:

TB	terminal block	TR	transformer	LS	high level electrodes
K	contactor	MS	manual switch	CS	conductimeter
F1-F2	primary fuses	FV	fill valve	F5-F6	PCOe fuses
F3	fuse protection drain pump	DP	drain pump	TAM	external TAM
F4	secondary fuses				

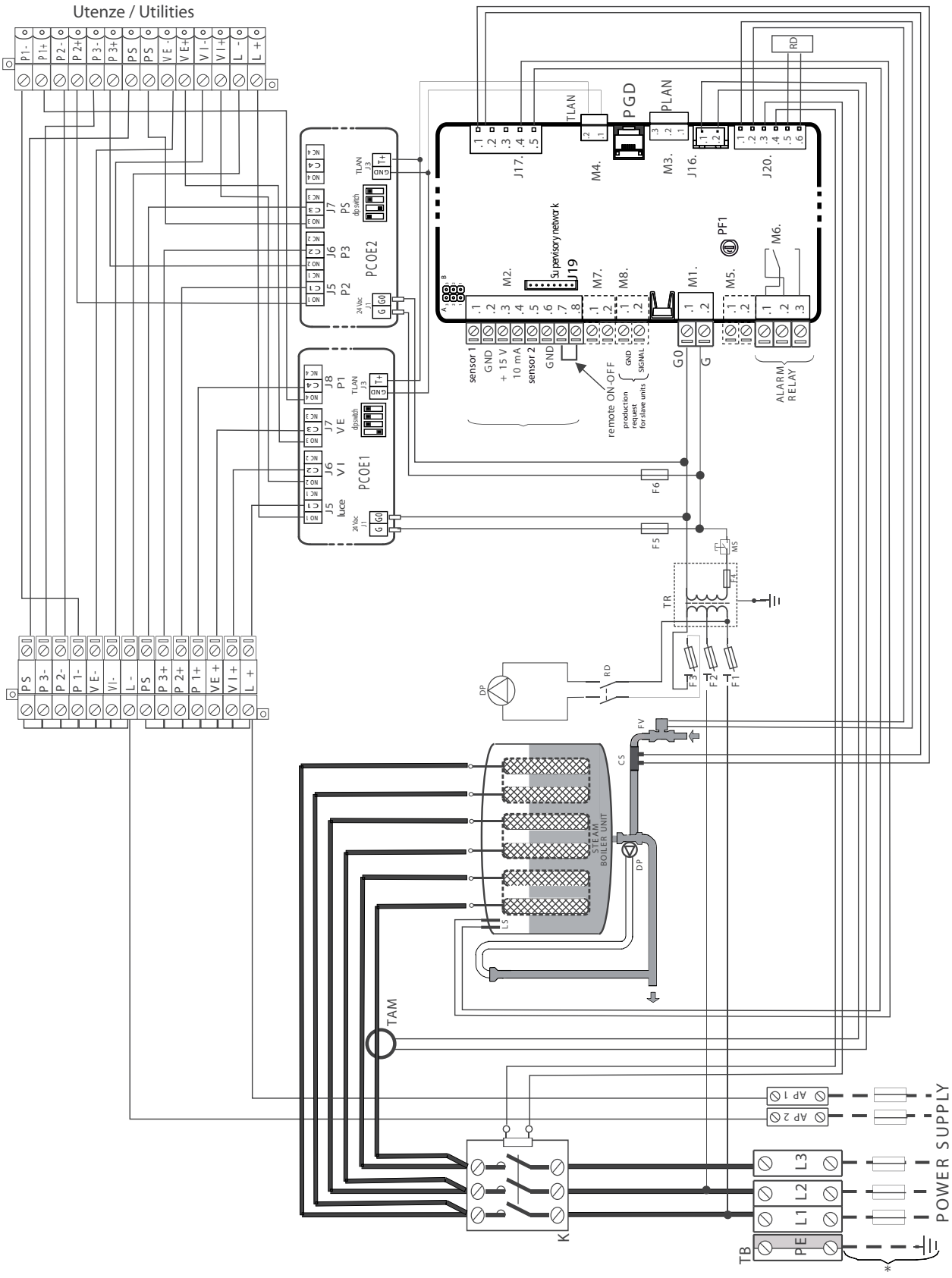

Fig. 11.c

(**) Attention: for TAM configurations and connections see par. 12.1

12. GENERAL FEATURES AND MODELS

12.1 humiSteam models and electrical specifications

The following table lists the electrical data relating to the power supply of the various models and the specifications of each. Note that some models may be powered at different voltages, obviously with different power input and steam production.

			power supply			rated specifications				
model	steam production [2; 4] (kg/h)	power[2] (kW)	code	voltage[1] (V - type)	current[2] (A)	TAM configuration[5]		cable[3] (mm^2)	line fuses[3] (A / type)	wiring diagram (Fig.)
UE001	1.5	1.1	D	230 - 1~	4.9	13.a	100	1.5	10 A / fast-blow	12.1
UE003	3	2.2	D	230 - 1~	9.8	13.d	300	2.5	16 A / fast-blow	12.1
			K	230 - 3~	5.6	13.a	100	2.5	16 A / fast-blow	12.2
			L	400 - 3~	3.2	13.d	100	1.5	10 A / fast-blow	12.2
UE005	5	3.7	D	230 – 1~	16.3	13.e	300	6.0	32 A / fast-blow	12.1
			K	230 - 3~	9.4	13.c	300	2.5	16 A / fast-blow	12.2
			L	400 - 3~	5.4	13.a	100	1.5	10 A / fast-blow	12.2
UE008	8	6.0	K	230 – 3~	15.1	13.c	300	6.0	32 A / fast-blow	12.2
			L	400 – 3~	8.7	13.a	100	2.5	16 A / fast-blow	12.2
UE009	9	6.7	D	230 - 1~	29.3	13.a	500	10.0	40 A / fast-blow	12.1
UE010	10	7.5	K	230 – 3~	18.8	13.c	300	6.0	32 A / fast-blow	12.2
			L	400 – 3~	10.8	13.d	300	2.5	16 A / fast-blow	12.2
UE015	15	11.2	K	230 – 3~	28.2	13.c	500	10.0	40 A / fast-blow	12.2
			L	400 – 3~	16.2	13.a	300	6.0	32 A / fast-blow	12.2
E018	18	13.5	L	400 – 3~	19.5	13.a	300	6.0	32 A / fast-blow	12.2
UE025	25	18.7	K	230 – 3~	47.1	13.b	500	25	63 A / fast-blow	12.3
			L	400 – 3~	27.1	13.c	500	16	50 A / fast-blow	12.3
UE035	35	26.2	K	230 – 3~	65.9	13.b	700	35	100 A / fast-blow	12.3
			L	400 – 3~	37.9	13.b	500	16	60 A / fast-blow	12.3
UE045	45	33.7	K	230 – 3~	84.7	13.b	700	50	125 A / fast-blow	12.3
			L	400 – 3~	48.7	13.c	700	25	80 A / fast-blow	12.3
UE065	65	48.7	L	400 – 3~	70.4	13.c	700	35	100 A / fast-blow	12.3

Tab. 12.a

(1) tolerance allowed on the rated mains voltage: -15%, +10%;
(2) tolerance on the rated values: +5%, -10% (EN 60335-1);
(3) recommended values refer to laying PVC or rubber cables in closed conduits, 20 m (65.6 feet) long; the standards in force must however be observed,
(4) rated max instant steam production: the average steam production may be affected by external factors, such as: ambient temperature, water quality, steam distribution system;
(5) refer to the wiring diagrams to verify

the data are not absolute and if these differ from local standards, the latter must prevail.

TAM configurations and connections (transformer for measuring the current)

Important: the configurations and connections are already made by CAREL, and no changes are required. The following diagrams represent possible connection modes and may be useful in the event of serious electrical malfunctions on the humidifier.
All operations must only be performed by qualified personnel, improper use may cause serious damage.

one cable turn

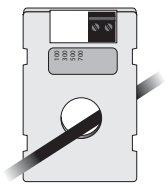

Fig. 12.a

one turn of the two cables of the same phase

Fig. 12.b

two cable turns of the same phase

Fig.12.c

one cable in "double turn" mode

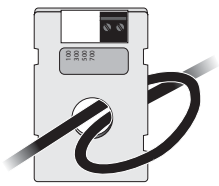

Fig.12.d

three cable turns of the same phase

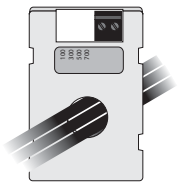

Fig.12.e

Important:

- to avoid interference, separate the power cables from the probe cables.

12.2 Technical specifications

technical specifications		UEX models													
		UE001*	UE003*	UE003**	UE005*	UE005**	UE008**	UE009*	UE010**	UE015**	UE018**	UE025**	UE035**	UE045**	UE065**
steam															
connection	230 V	22/30 (0.9/1.2)			30 (1.2)							1x40 (1x1.6)		2x40 (2x1.6)	--
dia. mm (in)	400 V	22/30 (0.9/1.2)			30 (1.2)							1x40 (1x1.6)			2x40 (2x1.6)
outlet pressure limits Pa (PSI)		0/1500 (0/0.218)			0/1300 (0/0.188)			0/1350 (0/0.196)				0/2000 (0/0.290)			
supply water															
connection		3/4" G													
temperature limits °C (°F)		1 to 40 (33.8 to .104)													
pressure limits (MPa)		0.1 to 0.8 (1 to 8 bar)													
hardness limits (°fH)		≤ 40													
instant flow-rate (l/min)		0.6						1.1				5.85 (7 for UE045 A 230 Vac)			7
conductivity range (µS/cm)		75 to 1250													
drain water															
connection dia. mm (in)		40 (1.6)													
typical temperature °C (°F)		≤100 (212)													
instant flow-rate (l/min)		7										22.5			
environmental conditions															
ambient operating temp. °C (°F)		1 to .40 (33.8 to .104)													
ambient operating humidity (% rH)		10 to 60													
storage temperature °C (°F)		-10 to 70 (14 to .158)													
storage humidity (% rH)		5 to 95													
index of protection		IP20													
electronic controller															
controller		UEW*********													
auxiliary voltage/frequency (V - Hz)		24 / 50/60													
maximum auxiliary power (VA)		90													
probe inputs (general features)		can be selected for the following signals: 0 to 1 Vdc, 0 to 10 Vdc, 2 to 10 Vdc, 0 to 20 mA, 4 to 20 mA, NTC input impedence: 60 kΩ with: 0 to 1 Vdc, 0 to 10 Vdc, 2 to 10 Vdc signals 50 Ω with: 0 to 20 mA, 4 to 20 mA signals													
active probe power supply (general features)		15 Vdc. 100 mA protected against short-circuits +1 Vdc with 135 Ω load													
alarm relay outputs(general features)		250 V 5 A (2 A) - type of action-microswitching 1C													
remote enable input (general features)		voltage-free contact; max. resistance 50 Ω; Vmax= 24 Vdc; Imax= 6 mA													
output															
instant steam production[1] kg/h (lb/h)		1.5 (3.3)	3.0 (6.6)	3.0 (6.6)	5.0 (11)	5.0 (11)	8.0 (17.6)	9.0 (19.8)	10.0 (22)	15.0 (33)	18.0 (39.7)	25 (55.1)	35 (77.2)	45 (99.2)	65 (143.3)
power input at rated voltage (kW)		1.12	2.25	2.5	3.75	3.75	6.0	6.75	7.5	11.25	13.5	18.75	26.25	33.75	48.75

Tab. 12.b

* single-phase, ** three-phase.

[1]= the average steam production is affected by factors such as: ambient temperature, water quality, steam distribution system

12.3 Models of steam hoses

		UEW models											
	code	UE001W	UE003W	UE005W	UE008W	UE009W	UE010W	UE015W	UE018W	UE025W	UE035W	UE045W	UE065W
	steam outlet dia. mm (in)	22 (0.9")	22 (0.9")	30 (1.2")	30 (1.2")	30 (1.2")	30 (1.2")	30 (1.2")	30 (1.2")	40 (1.6")	40 (1.6")	40 (1.6")	2x40 (2x1.6")
	max. capacity kg/h (lb/h)	1/1.5 (2.2/3.3)	3 (6.6)	5 (11)	8 (17.6)	9 (19.8)	10 (22)	15 (33)	18 (39.7)	25 (55.1)	35 (77.2)	45 (99.2)	65 (143.3)
CAREL steam hoses													
code	ID mm (in)												
1312360AXX	22 (0.9")	√	√	-	-	-	-	-	-	-	-	-	-
1312365AXX	30 (1.2")	-	-	√	√	√	√	√	√	-	-	-	-
1312367AXX	40 (1.6")	-	-	-	-	-	-	-	-	√	√	√	√

Tab. 13.c

12.4 Models of concentrated jet steam distributors

			UEW models												
		code	UE001W	UE003W	UE005W	UE008W	UE009W	UE010W	UE015W	UE018W	UE025W	UE035W	UE045W	UE045W (230V)	UE065W
		Ø steam outlet mm (in)	22 (0.9")	22 (0.9")	30 (1.2")	30 (1.2")	30 (1.2")	30 (1.2")	30 (1.2")	30 (1.2")	40 (1.6")	40 (1.6")	40 (1.6")	2x40 (2x1.6")	2x40 (2x1.6")
		max. capacity kg/h (lb/h)	1/1.5 (2.2/3.3)	3 (6.6)	5 (11)	8 (17.6)	9 (19.8)	10 (22)	15 (33)	18 (39.7)	25 (55.1)	35 (77.2)	45 (99.2)	45 (99.2)	65 (143.3)
CAREL distributors jet concentrated															
code	Ø steam inlet mm (in)	max. capacity Kg/h (lb/h)													
SDPOEM0012	22 (0.9")	3 (6.6)	1	1	-	-	-	-	-	-	-	-	-	-	-
SDPOEM0022	30 (1.2")	18 (39.7)	1	1	1	1	1	1	1	1	-	-	-	-	-
SDPOEM0000	30 (1.6")	18 (39.7) con foro da 30mm(1.6")	1	1	1	1	1	1	1	1	(2)*	(2)*	(4)***	(4)**	(4)**

Tab. 12.d

1 = the humidifier is connected to just one distributor
(2) = the humidifier is connected to two distributors (using the "Y" kit: UEKY000000)
2 = the humidifier is fitted with two outlets and can be connected to two distributors
(4) = the humidifier is fitted with two outlets and can be connected to up to four distributors (using two "Y" kits)
* = use CAREL "Y" kit code UEKY000000 (40 mm/1.6" inlet and 2 x 30 mm/1.2" outlets)
** = use CAREL "Y" kit code UEKY000000 (40 mm/1.6" inlet and 2 x 30 mm/1.2" outlets)
*** = use one CAREL "Y" kit code UEKY40X400 (40 mm/1.6" inlet and 2 x 40 mm/1.6" outlets) and two CAREL "Y" kit code UEKY000000 (40 mm/1.6" inlet and 2 x 30 mm/1.2" outlets)

12.5 Models of linear distributors

				UEW models												
			code	UE001W	UE003W	UE005W	UE008W	UE009W	UE010W	UE015W	UE018W	UE025W	UE035W	UE045W	UE045W (230V)	UE065W
			Ø steam outlet mm (in)	22 (0.9")	22 (0.9")	30 (1.2")	30 (1.2")	30 (1.2")	30 (1.2")	30 (1.2")	30 (1.2")	40 (1.6")	40 (1.6")	40 (1.6")	2x40 (2x1.6")	2x40 (2x1.6")
			max. capacity kg/h (lb/h)	1/1.5 (2.2/3.3)	3 (6.6)	5 (11)	8 (17.6)	9 (19.8)	10 (22)	15 (33)	18 (39.7)	25 (55.1)	35 (77.2)	45 (99.2)	45 (99.2)	65 (143.3)
CAREL DP linear distributors																
cod.	Ø isteam inlet mm (in)	max. capacity Kg/h (lb/h)	length mm (in)													
DP035D22R0	22 (0.9")	4 (8.8)	332 (13.1)	1	1	-	-	-	-	-	-	-	-	-	-	-
DP045D22R0	22 (0.9")	6 (13.2)	438 (17.2)	1	1	-	-	-	-	-	-	-	-	-	-	-
DP060D22R0	22 (0.9")	9 (19.8)	597 (23.5)	1	1	-	-	-	-	-	-	-	-	-	-	-
DP085D22R0	22 (0.9")	9 (19.8)	835 (32.9)	1	1	-	-	-	-	-	-	-	-	-	-	-
DP035D30R0	30 (1.2")	5 (11)	343 (13.5)	-	-	1	-	-	-	-	-	-	-	-	-	-
DP045D30R0	30 (1.2")	8 (17.6)	427 (16.8)	-	-	1	1	-	-	-	-	-	-	-	-	-
DP060D30R0	30 (1.2")	12 (26.5)	596 (23.5)	-	-	1	1	1	1	-	-	-	-	-	-	-
DP085D30R0	30 (1.2")	18 (39.7)	850 (33.5)	-	-	1	1	1	1	1	1	(2)*	(2)*	-	-	-
DP105D30R0	30 (1.2")	18 (39.7)	1048 (41.3)	-	-	1	1	1	1	1	1	(2)*	(2)*	-	-	-
DP125D30R0	30 (1.2")	18 (39.7)	1245 (49)	-	-	1	1	1	1	1	1	(2)*	(2)*	-	-	-
DP165D30R0	30 (1.2")	18 (39.7)	1636 (64.4)	-	-	-	-	-	1	1	1	(2)*	(2)*	-	-	-
DP085D40R0	40 (1.6")	25 (55.1)	834 (32.8)	-	-	-	-	-	-	-	-	1	(2)**	(2)**	2	(4)**
DP105D40R0	40 (1.6")	35 (77.2)	1015 (40)	-	-	-	-	-	-	-	-	1	1	(2)**	2	2
DP125D40R0	40 (1.6")	45 (99.2)	1022 (40.2)	-	-	-	-	-	-	-	-	1	1	1	1**	2
DP165D40R0	40 (1.6")	45 (99.2)	1636 (64.4)	-	-	-	-	-	-	-	-	-	1	1	1**	2
DP205D40R0	40 (1.6")	45 (99.2)	2025 (79.7)	-	-	-	-	-	-	-	-	-	1	1	1**	2

Tab. 12.e

1 = the humidifier is connected to just one distributor
(2) = the humidifier is connected to two distributors (using the "Y" kit: UEKY000000)
2 = the humidifier is fitted with two outlets and can be connected to two linear distributors
(4) = the humidifier is fitted with two outlets and can be connected to up to four linear distributors (using two "Y" kits)
* = use CAREL "Y" kit code UEKY000000 (40 mm/1.6" inlet and 2 x 30 mm/1.2" outlets)
** = use CAREL "Y" kit code UEKY40X400 (40 mm/1.6" inlet and 2 x 40 mm/1.6" outlets)
*** = use two CAREL "Y" kit code UEKY40X400 (40 mm/1.6" inlet and 2 x 40 mm/1.6" outlets)

For typical installations of the linear distributors, see Fig. 13.f on page 46

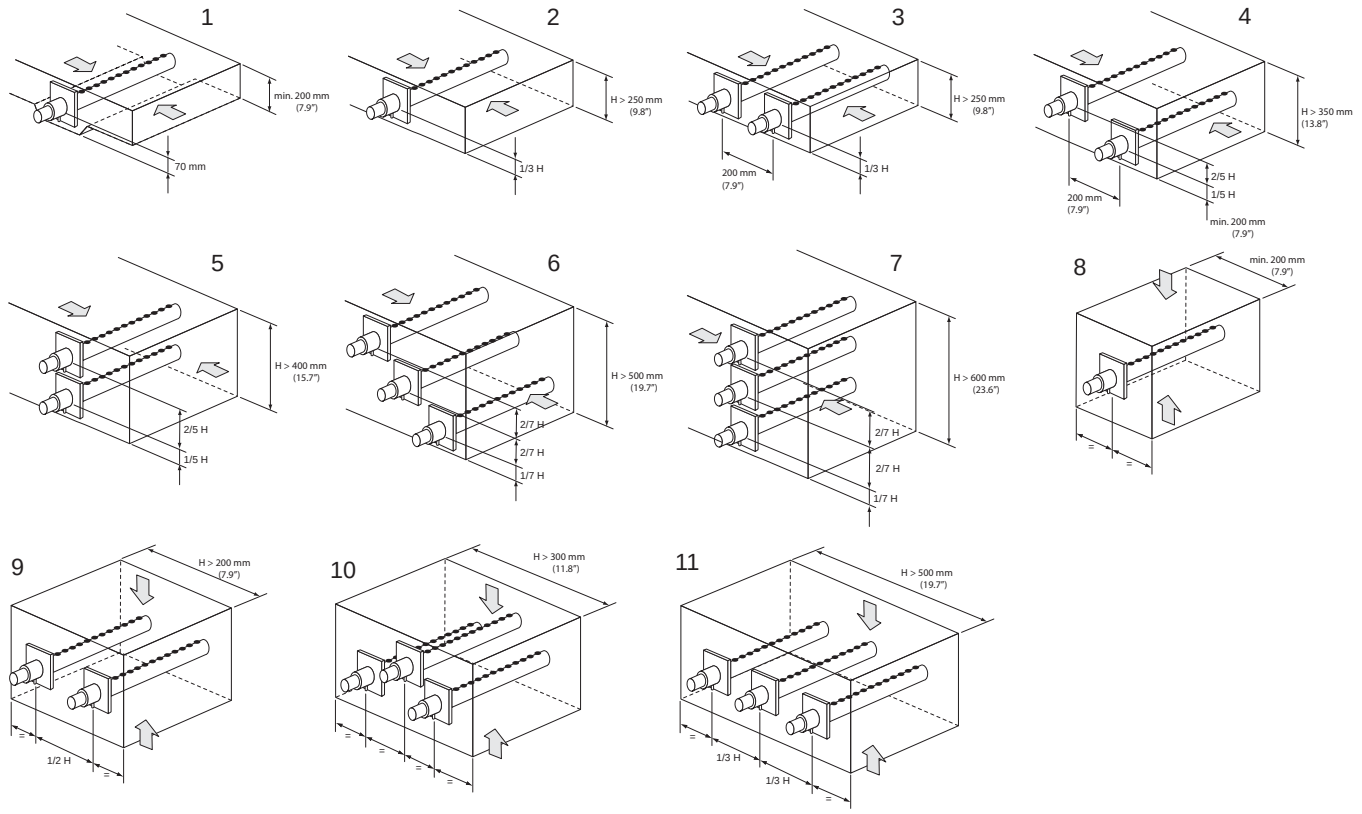

Fig. 12.f

12.6 Controlling the board via network

The variables shown in the list are only some of the total variables available.
DO NOT CONFIGURE VA-RIABLES THAT ARE NOT SHOWN IN THE TABLE, OTHERWISE THE OPERATION OF THE HUMIDIFIER MAY BE AFFECTED.

"A" CAREL - Modbus®	Read (R)/ Write (W)	Analogue variables* (Modbus®: REGISTERS)
1	R	value probe 1(according to the chosen units)
2	R/W	minimun scale probe 1
3	R/W	maximun scale probe 1
4	R/W	offset probe 1
5	R	current production (kg/h)
6	R	value probe 2(according to the chosen units)
7	R/W	minimun scale probe 2
8	R/W	maximun scale probe 2
9	R/W	offset probe 2
10	R	current production (kg/h)
11	R	total actual current (A)
12	R	cylinder : actual current (A)
15	R/W	Setpoint of temperature (valid if they are active scheduler: Global Setpoint)
16	R/W	%rH differential
20	R/W	regolation differential
21	R/W	dehumidification offset
22	R/W	dehumidification differential
26	R	Probe Input 1 - input value (NOT SCALE)
27	R	Probe Input 2 - input value (NOT SCALE)
28	R	pCOE1 - analog input 1
29	R	pCOE1 - analog input 2
30	R	pCOE1 - analog input 3
31	R	pCOE1 - analog input 4
33	R	pCOE2- analog input 1
34	R	pCOE2- analog input 2
35	R	pCOE2- analog input 3
36	R	pCOE2- analog input 4

Tab. 12.f

" D " CAREL - Modbus®	lettura (R)/ scrittura (W)	variabili digitali (Modbus®: COILS)
1	R	Contactor
2	R	Fill valve
3	R	Drain
4	R-W	Abilita ON/OFF da supervisore
5	R-W	Abilita regolazione da supervisione
7	R	Stato deumidifica on/off
8	R	Allarme generale
10	R	Allarme supervisore non connesso
11	R	Umidostato
12	R	remote On/off
13	R	high conductivity alarm
14	R	high conductivity warning
15	R	cylinder : high current alarm
16	R	cylinder : low current alarm
17	R	cylinder : lack of water alarm
18	R	cylinder : low production alarm
19	R	cylinder : drain alarm
20	R	cylinder : full without demand alarm
21	R	cylinder : maintenance-due alarm (timed)
22	R	cylinder : pre-exhaustion warning
23	R	cylinder : foam warning
24	R	cylinder : totally exhausted warning
25	R	cylinder : maintenance-due warning (timed)
37	R	Alarm probe 1
38	R	Alarm probe 2
39	R	high temperature warning
40	R	low temperature warning
42	R	hour counter alarm
43	R-W	Enabling ON-OFF from supervisor (1=enabled)
44	R-W	long-inactivity drain: = enabled, 0 = disabled
45	R-W	total periodical flush: = enabled, 0 = disabled
46	R-W	Enable periodic drain
48	R-W	dilution drain with contactor opened: 1 = enabled, 0 = disabled
49	R-W	warnings for pre-exhaustion and complete exhaustion: 1 = enabled, 0 = disabled
50	R-W	Enable operation of the humidifier
52	R-W	alarms reset from supervisor
53	R-W	alarms reset
55	R-W	cylinder : manual drain: 1 = on, 0 = off
57	R-W	cylinder : cleaning cycle: 1 = on, 0 = off
59	R-W	Change hour system (ch)
60	R-W	Change minut system (ch)
61	R-W	Change day system (ch)
62	R-W	Change month system (ch)
63	R-W	Change year system (ch)
64	R-W	State Digital input level liquid cylinder (0=Normal;1=Hight)
65	R-W	Operation Mode (0=Modulant ;1=On/Off)
67	R-W	Not essence enable
71	R-W	Manual mode contactor (Digital output 3 PHC)
72	R-W	Manual activation cylinder filling (Digital output 1 PHC)
73	R-W	Manual activation cylinder drain (Digital output 2 PHC)
74	R-W	Manual alarm activation (Digital output 5 PHC)
76	R-W	Enable essence 1
77	R-W	Enable essence 2
78	R-W	Enable essence 3
79	R-W	Enable fan immission
80	R-W	Enable fan extraction
81	R-W	Fan operation mode immission (Manual;Automatic)
82	R-W	Activiting fan immission mode ON/OFF
83	R-W	Enable scheduler
84	R-W	Attivazione ventilatore immissione in modalità ON/OFF
85	R-W	Abilitazione luce
86	R-W	Activiting fan extraction mode ON/OFF
87	R-W	Fan operation mode extraction (Manual;Automatic)
89	R-W	Measure Units

90	R-W	On/Off from keyboard
91	R-W	pCOE1 offline
92	R-W	pCOE2 offline
93	R-W	Enable fan immission in mode automatic (0=Setpoint;1=Scheduler)
94	R-W	Status sanification in mode manual (0=off;1=ON)
95	R-W	Type of sanification (0=On/Off;1=Automatic)
96	R-W	Sanification active
97	R-W	Enable sanification function
98	R-W	Status fan immission during the first cycle of sanification
99	R-W	Status fan extraction during the first cycle of sanification
100	R-W	Status fan immission during the second cycle of sanification
101	R-W	Status fan extraction during the second cycle of sanification
102	R-W	Enable pump during the first cycle of sanification
103	R-W	Enable pump during the second cycle of sanification
104	R-W	Manual mode Light - Digital Output1 pCOE1
105	R-W	Manual mode Fan immission - Digital Output 2 pCOE1
106	R-W	Manual mode Fan extraction - Digital Output 3 pCOE1
107	R-W	Manual mode Essence 1 - Digital Output 4 pCOE1
108	R-W	Manual mode Essence 2 - Digital Output 1 pCOE2
109	R-W	Manual mode Essence 3 - Digital Output 2 pCOE2
110	R-W	Manual mode pump sanification - Digital Output 3 pCOE2
111	R-W	Manual mode (not used) - Digital Output 3 pCOE3
112	R	Status light (OFF, ON) - Analog output 2, used as digital (0-1000)
113	R	Status Fan immission (OFF, ON)
114	R	Status Fan extraction (OFF, ON)
115	R	Status pump essence 1 (OFF, ON)
116	R	Status pump essence 2 (OFF, ON)
117	R	Status pump essence 3 (OFF, ON)
118	R	Status pump sanification (OFF, ON)
119	R	Status digital output 4 pCOE2 (OFF, ON) - (non used)
120	R	pCOE1: Digital Input 1
121	R	pCOE1: Digital Input 2
122	R	pCOE1: Digital Input 3
123	R	pCOE1: Digital Input 4
124	R	pCOE2: Digital Input 1
125	R	pCOE2: Digital Input 2
126	R	pCOE2: Digital Input 3
127	R	pCOE2: Digital Input 4

Tab. 12.g

"I"		read (R)/write (W)	integer variables (Modbus®: REGISTERS)
CAREL	Modbus®		
1	129	R-W	Parte alta della versione del software
2	130	R-W	Parte bassa della versione del software
3	131	R-W	Nominal supply [V]
4	132	R-W	Number of hours between two successive drain for dilution.
5	133	R-W	Number of days for drain to inactivity.
6	134	R-W	Type probe signal (0 = NTC,1 = 0-1V,2 = 2-10V ,3 = 0-10V,4 = 0..20mA,5 = 4..20mA)
7	135	R-W	Type regolation (0=one probe, 1=two probe, 2= prop. signal, 3=remote contact)
8	136	R-W	Status unit
9	137	R-W	Conducibility
10	138	R-W	Cylinder Limit huor working
11	139	R-W	Phase of cylinder
12	140	R-W	Status of cylinder
13	141	R-W	Pre-alarm threshold high conductivity. Recommended value 1500 uS / cm
14	142	R-W	Alarm threshold high conductivity. Recommended value 2000 uS / cm
16	144	R-W	Regolation the threshold percentage of the time of drain by dilution (50-200%)
17	145	R-W	Regolation the threshold percentage of the evaporation time (50-200%)
18	146	R-W	hour
19	147	R-W	Minut
20	148	R-W	dya
21	149	R-W	Month
22	150	R-W	Year
23	151	R-W	week day
24	152	R-W	system timer: hour (l)
25	153	R-W	system timer: minute (l)
26	154	R-W	system timer: day(ch)
27	155	R-W	system timer: month (ch)
28	156	R-W	system timer: year (ch)
29	157	R	Hours operating cylinder
30	158	R-W	Mode to enable light (0=Off,1=Manual,2=from scheduler)
31	159	R-W	sending the regolation signal (0-1000, temper: tenths of °C/°F,)
32	160	R-W	percentage of set point for the definition of the band activation
33	161	R	Version software
34	162	R	Number version
35	163	R	day release version
36	164	R	month release version
37	165	R	year release version
38	166	R	version BOOT
39	167	R	release date BOOT
40	168	R	Type of umidifiee
41	169	R	Number essence
42	170	R	Numero actual essence
43	171	R-W	Time on for activation pump essence 1
44	172	R-W	Time off for activation pump essence1
45	173	R-W	Time on for activation pump essence2
46	174	R-W	Time off for activation pump essence2
47	175	R-W	Time on for activation pump essencea3
48	176	R-W	Time off for activation pump essence3
81	209	R	Software version, variable compacted to Humiset / CarelJob
96	224	R-W	delay activation cycle Sanification (seconds)
97	225	R-W	Duration in minutes of the first cycle of sanification
98	226	R-W	Duration in minutes of the second cycle of sanification
99	227	R-W	Production during the first cycle of sanification
100	228	R-W	Production during the second cycle of sanification
101	229	R-W	duration power immission fan in automatic periodic mode
102	230	R-W	time off immission fan in automatic periodic mode
105	233	R	value read by probe and weighed about two probes (if enabled probe two)
106	234	R	value read by probe and weighed about two probes (if enabled probe two) limitated to 0
107	235	R-W	Mode automatic for fan extraction (0=Periodic;1=Setpoint;2=Schedular)
108	236	R-W	Delayed alarm signal supervisor disconnected (Default 60 seconds)
110	237	R-W	pCOE1 - Type analogic input 1 and 2
111	238	R-W	pCOE1 - Type analogic input 3 and 4
112	239	R-W	pCOE2 - Type analogic input 1 and 2
113	240	R-W	pCOE2 - Type analogic input 3 and 4

Tab. 12.h

13. TECHNICAL APPENDIX

13.1 Operating principle

Immersed electrode humidifiers manufacture steam by boiling the water contained inside the cylinder. The heat required to boil the water is produced by passing an electrical current through the cylinder. This is done by applying a voltage to the electrodes immersed in the water.
Initially, when the cylinder is new or has just been cleaned, the current depends almost exclusively on the type of supply water: the more salts in the water, the higher the current, and the required steam production is achieved quicker. Over time the salt deposits in the cylinder increase (these do not evaporate with the water), helping achieve the rated production. In steady operation, the level of production required is maintained automatically by controlling the current input, adjusting the level of water in the cylinder.
The salts that deposit over time cause the progressive depletion of the cylinder. To avoid excessive accumulation, the humidifier automatically drains and replenishes a certain quantity of water ate set intervals.

13.2 Control principles

ON/OFF Control

The action is all or nothing, activated by an external contact that consequently determines the control set point and differential.
The external contact may be a humidistat, whose status determines the operation of the humidifier:

- contact closed: the humidifier produces steam if the remote ON/OFF contact is also closed;
- contact open: the production of steam ends.

Proportional control (see Fig. 13.a)

The production of steam is proportional to the value of a signal "Y" from an external controller. The type of signal can be selected between the following standards: 0 to 1 Vdc, 0 to 10 Vdc, 2 to 10 Vdc, 0 to 20 mA, 4 to 20 mA (installer menu > regulation type > signal type).
The entire range is indicated as proportional band.
The maximum production of the humidifier, corresponding to the value maximum of the external signal, can be set from 20% to 100% of the rated value of the humidifier ("SET" screen> Max. Prod).

The minimum production has an activation hysteresis, hy, equal to 5% of the range of the proportional band BP of the external signal "Y".

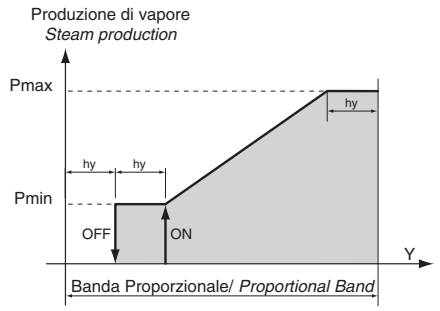

Fig. 13.a Proportional regolation

Independent control with temperature probe (see Fig. 13.b)

The production of steam is related to the reading of the probe and increases as the temperature value read decreases. The production reaches the maximum when the temperature is lower than the set point (St) by a value at least equal to the proportional band. The maximum production may be programmed between 20% and 100% of the rated value of the humidifier (and between the 10% and 100% in series operation). To set the set point and differential for the main control probe: "SET" screen > set point and proportional band. The minimum production has an activation hysteresis, hy, equal to 2% of the range.

To check that the temperature measured by the probe is within certain preset values, one alarm threshold can be set in independent control:

- high temperature alarm threshold;

When these threshold are exceeded, an alarm is activated, after a set delay.

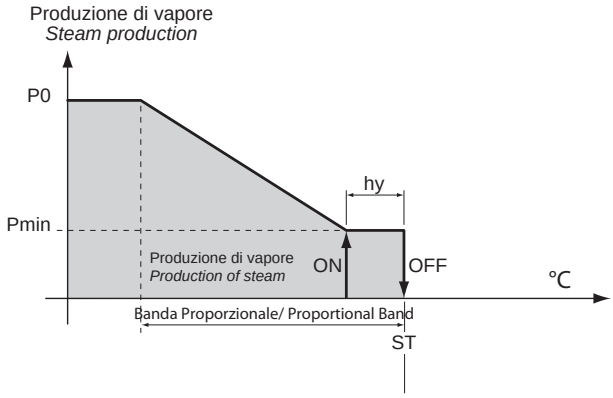

Fig. 13.b Regolation probe

13.3 Supply water conductivity

Conductivity measurement and alarms
The conductivity of the supply water is measured by the conductivity meter when the fill solenoid valve is opened.
Two alarm thresholds are available (installer menu > water conductivity > warning/alarm):

- warning threshold (default 1000 uS/cm), signal only without activating the alarm relay (automatic reset when the condition is no longer present);
- alarm threshold (default 1250 uS/cm), unit shutdown with activation of the alarm relay.

The alarm is activated when the reading exceeds one of the two thresholds continuously for 60 minutes, or alternatively instantly if the value read is 3 times higher than the threshold.
To disable the alarm signal, simply set the thresholds above the maximum value of the reading.

Overriding the conductivity of the supply water

In conditions where the supply water has relatively low conductivity, a higher conductivity value can be set (installer menu > water conductivity > override conductivity). In this mode, if during the start-up phase the water touches the high level sensors (with consequent partial draining), and the steam production has not yet reached the rated value, the successive water fill cycles will last longer than the rated value so as to reach steady operation faster.

13.4 Automatic draining

The humidifier automatically drains and replaces some of the water contained in the cylinder, to prevent an excessive concentration of salts following the evaporation process.
The drain pump is opened for a set time whenever the conductivity exceeds the maximum limit; this situation is measured indirectly by evaluating the evaporation speed).
During the automatic draining phase, the electrodes are off, so as to prevent the drain water from carrying current.

Powered draining

To enable powered draining: installer menu > drain options > contactor OFF during drain.

Duration and frequency of the drain to dilute cycles

The duration and the frequency of the drain to dilute cycles can be set according to the characteristics of the supply water (installer menu > drain options > dilution drain time and frequency). For example, with highly conductive water, the duration and frequency of the drain to dilute cycles should be increased. This will avoid excessive concentrations of salts inside the cylinder.

Drain due to excess foam

With certain types of supply water, foam may form during the production of steam just above the water. This situation must be resolved, as it may cause water to be released together with the steam. For this purpose, two electrodes are fitted on the top of the cylinder. When these electrodes detect the presence of foam, the humidifier activates a series of repeated drain cycles. If the situation persists, the complete washing of the cylinder is activated.
The complete washing of the cylinder can be disabled, so as to guarantee steam production, even if reduced, in applications where continuity of service is required (installer menu > drain options > disable complete emptying for foam).

Drain due to inactivity

In humidifier does not operate for an extended time (it remains on but does not produce steam), the water in the cylinder is drained automatically, to avoid stagnation and hygiene risks.
To disable the periodical drain due to inactivity: installer menu > drain options > drain after inactivity.
To set the inactivity time: installer menu > drain options > inactivity days (default 3 days).

Draining due to a significant reduction in the request for production

In the event of a significant reduction in the request for steam production, the humidifier, rather than wait for the level of water (and thus the production) to decrease due to the effect of the production itself, performs a drain cycle. The reduction in the request for steam production is considered significant if the current is 33% higher than that relating to the requested level. This function can be disabled: installer menu > drain options > drain if steam request drops.

Periodical drain

When using water rich in substances such as humus, lime and impurities, the efficiency and the operation of the humidifier may be affected. In these cases, a periodical drain cycle should be set for the cylinder top avoid accumulating residues.
To enable the periodical drain: installer menu > drain options > periodic cylinder flush
To set the drain interval: installer menu > drain options > time interval

13.5 Automatic insufficient supply water management

The humidifier checks whether there is no supply water or the flow-rate of supply water is too low, by controlling if the current at the electrodes increases after opening the fill solenoid valve.
In this case, the humidifier:

- activates the alarm relay,
- opens the contactor and closes the fill solenoid valve for 10 minutes

After the 10 minutes, the fill solenoid valve is opened, the contactor closed and the phase current measured: if it increases the alarm is deactivated, otherwise the procedure is repeated.

NOTE: the alarm is reset automatically and is managed according to the procedure described above.

13.6 Cylinder "exhaustion" and cylinder " pre-exhaustion" alarms

To disable the "cylinder exhaustion" alarm: installer menu > options > cylinder pre-exhaustion alarm
To set "cylinder exhaustion warning" (maximum operating hours): installer menu > options > cylinder lifetime warning (setting "0" disables the alarm).

CAREL reserves the right to modify or change its products without prior notice.

CAREL

CAREL INDUSTRIES HQs
Via dell'Industria, 11 - 35020 Brugine - Padova (Italy)
Tel. (+39) 049.9716611 - Fax (+39) 049.9716600
e-mail: carel@carel.com - www.carel.com

Agenzia / *Agency*:

"Wellness" +0300060EN - rel. 1.3 - 10.05.2013