heaterSteam - UR

Electric resistance humidifier

CAREL

ENG User manual

LEGGI E CONSERVA QUESTE ISTRUZIONI

READ AND SAVE THESE INSTRUCTIONS

NO POWER & SIGNAL CABLES TOGETHER

READ CAREFULLY IN THE TEXT!

IMPORTANT WARNINGS:

This product is compliant with the European directives and other standards specified on the EC declaration of conformity. The customer is responsible for suitably verifying any use of the product that implies application of standards relating to any special environments and/or processes (e.g. heavy industry, medical environments, maritime environments, railway environments, etc.) other than those specified by Carel.

The humidifiers manufactured by CAREL are advanced products, whose operation is specified in the technical documentation supplied with the product that can be downloaded, even prior to purchase, from the website www.carel.com. Every product made by CAREL Industried, in relation to its advanced level of technology, requires a qualification/ configuration / setup phse in order to best fulfil your specific application. The lack of such phase of study, as indicated in the manual, can cause the final product to malfunction, of which CAREL cannot be held responsible. The client (builder, developer or installer of the final equipment) assumes all responsibility and risk relating to the configuration of the product in order to achieve the expected results in relation to the specific final installation and/or equipping. In this case, subject to specific agreements, CAREL acts as a consultant for the success of the installation / start-up / use of the machine, but in no case does it accept liability for proper operation of the humidifier and of the final plant, should the warnings and recommendations in this manual or in any other technical documentation of the product not be followed. In particular, in addition to the obligation to observe the above mentioned warnings and recommendations for proper use of the product, we recommend paying attention to the following warnings:

DANGER ELECTRIC SHOCK: The humidifier includes live electrical parts. Disconnect the power supply before accessing internal parts, in case of maintenance and during installation.
DANGER WATER LEAKS: The humidifier automatically and constantly sucks in/drains quantities of water. Malfunctions in the connections or humidifier may cause leaks.
DANGER OF BURNS: The humidifier contains hot parts and delivers steam at 100 °C / 212 °F.

- The product is designed exclusively to humidify rooms either directly or through distribution systems (ducts).
- Installation, operation and maintenance must be performed by qualified personnel, aware of the necessary precautions and able to perform the required operations correctly.
- All operations on the product must be carried out according to the instructions given in this manual and on the labels applied to the product. Any uses or modifications unauthorized by the manufacturer are considered improper. CAREL denies all responsibility for such unauthorized uses.
- Do not attempt to open the humidifier in any way other than the ones described in the manual.
- Follow the regulations in force in the place where the humidifier is installed.
- Keep the humidifier out of the reach of children and pets.
- Do not install and use the product near objects that can be damaged by contact with water (or condensate). CAREL denies all responsibility for direct or indirect damage as a result of loss of water from the humidifier.
- Do not use corrosive chemicals, aggressive solvents or detergents to clean the internal or external parts of the humidifier, unless specifically indicated in the user's manual.

CAREL adopts a continuous development policy. Therefore, CAREL reserves the right to carry out modifications and improvements to any product described in this document without prior notice. The technical data in the manual can undergo modifications without forewarning. The liability of CAREL in relation to its own product is governed by CAREL general contract conditions published on the website www.carel.com and/or by specific agreements with clients; in particular, within the limits set by the applicable law, in no way will CAREL, its employees or its branch offices/affiliates be responsible for any lack of earnings or sales, loss of data and information, cost of replacement goods or services, damage to objects or persons, work interruptions, or any direct, indirect, accidental, patrimonial, coverage, punitive, special or consequential damage in any way caused, be they contractual, out-of-contract, or due to negligence or other responsibility originating from the installation, use or inability of use of the product, even if CAREL or its branch offices/affiliates have been warned of the possible damage.

ATTENTION

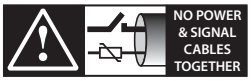

READ CAREFULLY IN THE TEXT!

Separate the probe cables and the digital input cables as much as possible from the inductive load and power cables to prevent possible electro-magnetic interference.
Never introduce power cables and signal cables (including those of electric control board) into the same cable troughs.

The installation of the product must absolutely include the grounding connection, using the special yellow-green terminal on the terminal block. Do not use the neutral as grounding connection.

DISPOSAL

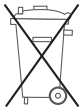

The humidifier consists of metal parts and plastic parts. With reference to the European Parliament and Council Directive 2002/96/EC issued on 27 January 2003 and the related national implementation legislation, please note that:

1. WEEE cannot be disposed of as municipal waste, said waste must be collected separately;
2. the public or private waste collection systems defined by local legislation must be used. Moreover, the equipment can be returned to the distributor at the end of its working life when buying new equipment;
3. the equipment may contain hazardous substances: the improper use or incorrect disposal of such may have negative effects on human health and on the environment;
4. the symbol (crossed-out wheeley bin) shown on the product or on the packaging and on the instruction sheet indicates that the equipment has been introduced onto the market after 13 August 2005 and that it must be disposed of separately;
5. in the event of illegal disposal of electrical and electronic waste, the penalties are specified by local waste disposal legislation.

Warranty for materials: 2 years (from the manufacture date, excluding consumables).

Certification: the quality and safety of CAREL products are guaranteed by CAREL's ISO 9001 certified design and production system, as well as Intertek marking.

Content

1. INTRODUCTION AND INSTALLATION 7

1.1 HeaterSteam (UR*) 7
1.2 Dimensions and weights 7
1.3 When opening the packaging 7
1.4 Positioning 7
1.5 Wall mounting 7
1.6 Removing the front panel 8
1.7 Mounting the front panel 8
1.8 Material supplied with the appliance 9
1.9 Technical data plate 9
1.10 Water circuit 9
1.11 Layout of models UR002 – UR0013 10
1.12 Layout of models UR020 – UR0080 11

2. HYDRAULIC CONNECTIONS 12

2.1 Supply water 14
2.2 Drain water 14

3. STEAM DISTRIBUTION 15

3.1 CAREL steam nozzles (SDPOEM00**) 15
3.2 CAREL linear distributors for air ducts or AHUs (DP***DR0) 15
3.3 CAREL blowers for room installation (VSDU0A*, VRDXL*) 16
3.4 Steam transport pipe 16
3.5 Condensate drain pipe 16
3.6 Outlet pressure limits 17

4. ELECTRICAL CONNECTIONS 18

4.1 Wiring provisions 18
4.2 Power cable connection 18
4.3 Control board 19
4.4 Operating and control principles 20
4.5 Steam production control signals 21
4.6 Control with humidity probes 22
4.7 Control with temperature probes 23
4.8 Alarm contact 24
4.9 Unit status contact / maintenance pre-alert 25
4.10 Production request analogue output 25
4.11 Final checks 25

5. PREPARING FOR OPERATION 25

5.1 Preliminary checks 25

6. START-UP AND USER INTERFACE 26

6.1 Start-up 26
6.2 Activation sequence 26
6.3 Shutdown 26
6.4 Graphic terminal 26
6.5 Keypad 27
6.6 Display 27
6.7 Display graphic area 2 – Probes/Request 27
6.8 Display graphic area 3 - Notification center 27
6.9 Display graphic area 4 - Unit status 28
6.10 Display graphic area 5 - Quick access 28
6.11 Display graphic area 6 - Unit status icons 28
6.12 Main menu 29
6.13 Complete programming menu tree 30
6.14 Alarms 32

7. USER MENU AND UNIT CONFIGURATION 33

7.1 Main menu 33
7.2 Menu E. Settings - a. Control 33
7.3 Menu E. Settings - b. Functions 35
7.4 Menu E. Settings - c. Configuration 37
7.5 E.Settings – d.Master/Slave 41
7.6 E.Settings – e.Backup 41
7.7 E.Settings – f.Manual mode 41
7.8 E.Settings – g.Initialisation 42
7.9 E. Settings - h. Supervision 43
7.10 E. Settings - i. Logout 43

8. MASTER/SLAVE SYSTEM 44

8.1 Description of the Master/Slave system 44
8.2 Network switch for Master/Slave connection 44
8.3 Type of Master/Slave system installation 44
8.4 Master/Slave system configuration 45

9. WEB SERVER 47

9.1 Integrated web server 47
9.2 Connecting to the integrated web server 47
9.3 Description of the web server function 47

10. HARDWARE BACKUP 48

11. SUPERVISOR NETWORK 49

11.1 Supervisor network protocols and configuration 49
11.2 Table of supervisor variables 49

12. WIRELESS PROBES, INSTALLATION AND CONFIGURATION 57

12.1 Type of installation and wireless probe electrical connections 57
12.2 Wireless probe installation 57

13. ALARM TABLE 58

14. SPARE PARTS AND MAINTENANCE 60

14.1 Maintenance 63
14.2 Maintenance operations 63
14.3 Maintenance frequency 63
14.4 Maintenance of the cylinder-boiler 64
14.5 Feed/drain tempering solenoid valve 65
14.6 Fill tank 66
14.7 Replacing the parts 66
14.8 Mechanical discharge of water in the cylinder 67

15. WIRING DIAGRAMS 68

15.1 Wiring diagram UR002-UR004 single-phase 208 V / 230 V - version U 68
15.2 Wiring diagram UR002-UR004 single-phase 230 V - version 0 69
15.3 Wiring diagram UR006 single-phase 208 V / 230 V - version U 70
15.4 Wiring diagram UR006 single-phase 230 V - version 0 71
15.5 Wiring diagram UR006-UR010-UR013 three-phase (208-230-400-460-575 V) - version U 72
15.6 Wiring diagram UR006-UR010-UR013 three-phase (230-400-460 V) - version 0 73
15.7 Wiring diagram UR020 three-phase (208-230-400-460-575 V) - version U
Wiring diagram UR027 three-phase (400-460-575 V) - version U 74

15.8 Wiring diagram UR020-UR027 three-phase (230-400-460 V) - version 0 75
15.9 Wiring diagram UR027 three-phase (230 V) - version U 76
15.10 Wiring diagram UR040 three-phase (400-460-575 V) - version U
Wiring diagram UR053 three-phase (575 V) - version U 77
15.11 Wiring diagram UR040-UR053 three-phase (400-460 V) - version 0 78
15.12 Wiring diagram UR053 three-phase (400-460 V) - version U 79
15.13 Wiring diagram UR060 three-phase (575 V) - version U 80
15.14 Wiring diagram UR060 (400-460 V) - version U 81
15.15 Wiring diagram UR060-UR080 three-phase (400-460 V) - version 0 82
15.16 Wiring diagram UR080 three-phase (400-460-575 V) - version U 83

16. GENERAL FEATURES AND MODELS 84

16.1 heaterSteam models and electrical features 84
16.2 Electrical connection of boiler heaters 85
16.3 Technical features 86
16.4 Steam transport pipe models 86
16.5 Steam nozzle models 86
16.6 Linear nozzle models and typical installations 87

1. INTRODUCTION AND INSTALLATION

1.1 HeaterSteam (UR*)

Range of isothermal electric heater humidifiers for steam production control and distribution, fitted with graphic display.
Available models (identified by means of the code on the label, packaging and on the technical data plate):

- UR002, UR004, UR006, UR010, UR013 with steam production capacity up to 13 kg/h (28,66 lb/h), water connections under the base of the humidifier;
- UR020, UR027, UR040, UR053, UR060, UR080 with steam production capacity from 20 to 80 kg/h (from 44.09 to 176.37 lb/h), water connections next to the humidifier.

1.2 Dimensions and weights

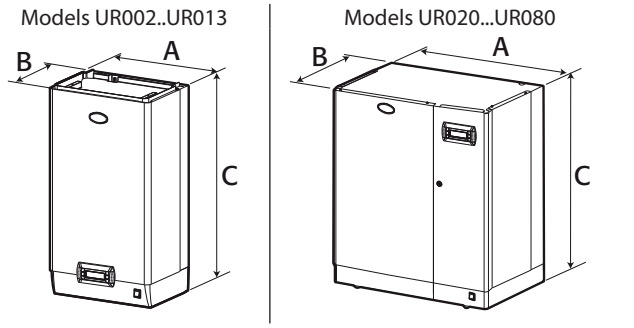

Fig. 1.a

		UR002…13	UR020…40	UR053…80
Size mm (in)	A	365 (14.37)	690 (27.16)	876 (34.48)
	B	275 (10.82)	445 (17.51)	445 (17.51)
	C	712 (28.03)	888 (34.96)	888 (34.96)

Tab. 1.a

		UR002…13	UR020…40	UR053…80
Weights kg (lb)	packaged	31(68.3)	73(160.9)	98(216.0)
	empty	26(57.3)	63(138.8)	87(191.8)
	installed*	35(77.1)	97(213.8)	155(341.7)

Tab. 1.b

* in operating conditions, filled with water.

1.3 When opening the packaging

- check the integrity of the humidifier upon delivery and notify to the carrier immediately, in writing, any damage that can be attributed to improper or careless transport;
- move the humidifier to the installation site before removing it from the packaging, grasping the neck from beneath;
- open the cardboard box, remove the protective material and remove the humidifier, keeping it upright at all times.

1.4 Positioning

- the unit is designed for wall mounting, suitable to support the weight under operating conditions (see par. "Wall mounting"). The models UR020*... UR080 * can be floor installed;
- to ensure proper distribution of steam, place the humidifier next to the steam distribution point;
- position the humidifier vertically, use a spirit level to ensure the base is perpendicular; observe the minimum clearances (see Fig. 1.b) to allow space for maintenance.

⚠ **Caution:** during operation, the external metal panels heat up, and the back leaning against the wall can reach temperatures above 60 °C (140 °F).

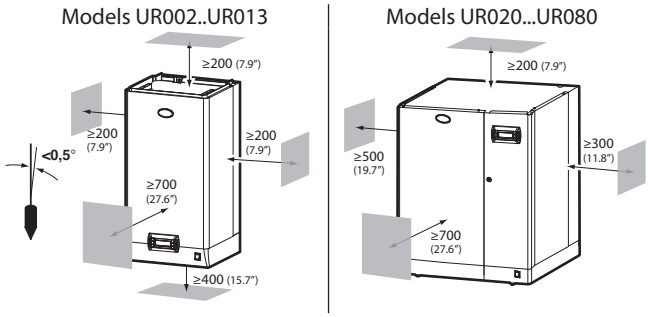

Fig. 1.b

1.5 Wall mounting

Mount the humidifier on the wall using the support bracket pre-attached to the humidifier, using the screws kit supplied (for mounting dimensions see draws below).

Instructions for fastening:

1. unscrew the wall bracket from the one attached to the humidifier;
2. secure the bracket to the wall (see Fig. 1.c), checking with a spirit level the horizontal position; if the unit is mounted on a masonry wall, you can use the plastic anchor plugs (Ø 8 mm, Ø 0.31in) and the screws (Ø 5 mm x L= 50 mm, Ø 0.19 in x L= 1.97 in) supplied;
3. hang the humidifier on the bracket using the profile on the upper edge of the unit's rear (Fig. 1.d).
4. lock the humidifier to the wall by means of the hole / holes found / on the lower part of the rear panel of the machine (Fig. 1.d).

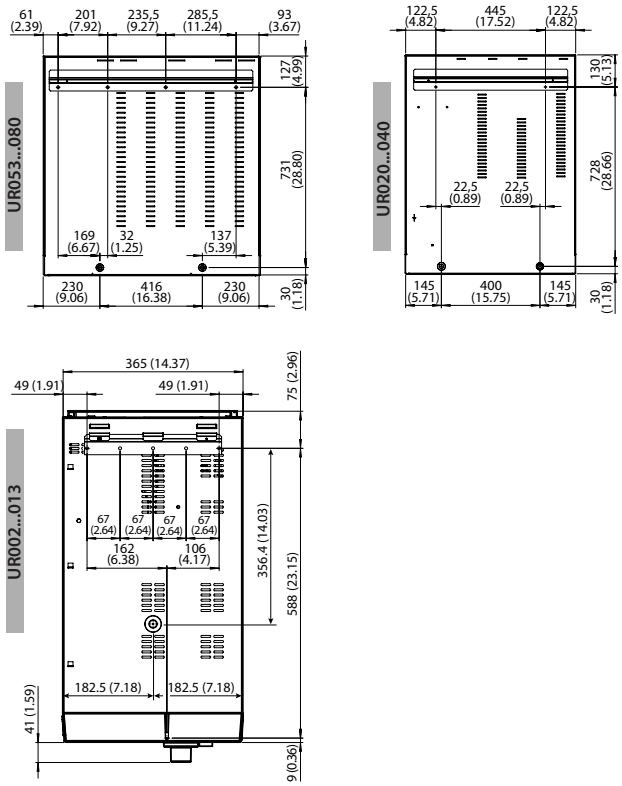

Fig. 1.c

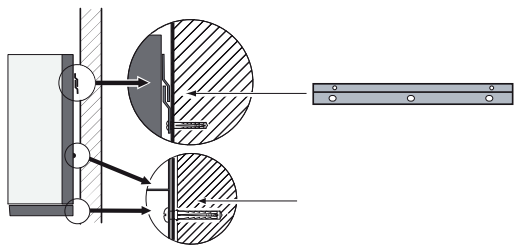

Fig. 1.d

1.6 Removing the front panel

Models UR002…UR013:

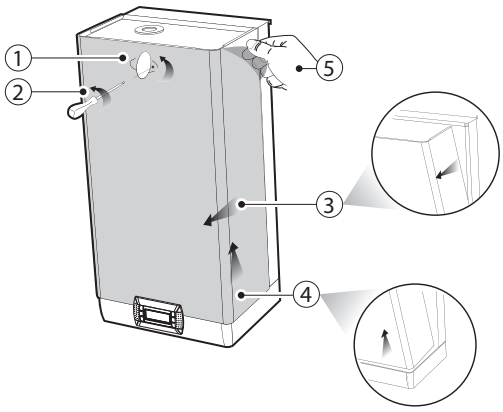

Fig. 1.e

1. turn the oval plate with the CAREL logo until the ground screw head can be seen;
2. loosen the screw with a screwdriver;
3. grab the sides of the panel, lift it about 20 mm (0.79 in), and detach it from the protruding edges of the humidifier;
4. remove the panel by pulling it forward;
5. remove the protective film.

Models UR020...UR080:

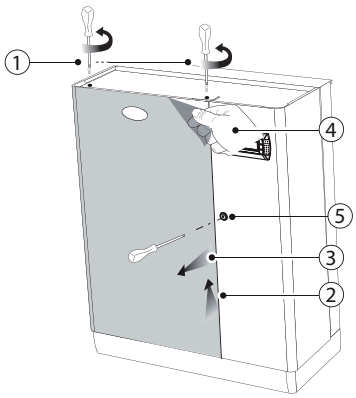

Fig. 1.f

1. remove the screws on the top of the humidifier using a screwdriver;
2. grab the panel by lifting it from the top about 20 mm (0.79 in);
3. remove the panel by pulling it forward;
4. remove the protective film (on all external surfaces of the humidifier).

1.7 Mounting the front panel

Models UR002…UR013:

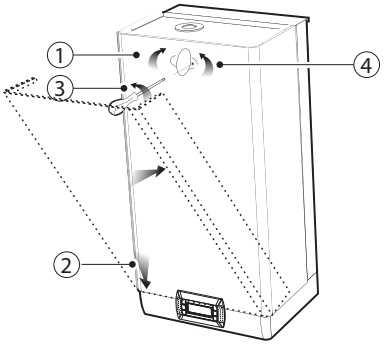

Fig. 1.g

1. turn the red oval plate with the CAREL logo so that the fastening hole below is visible;
2. slide the panel on the frame (keeping it slightly raised and tilted) until it stops on the rear edges;
3. fasten the ground screw using a screwdriver, ensuring its tightening;
4. turn the red oval plate with the CAREL logo so that the fastening hole below is no longer visible;

Models UR020...UR080:

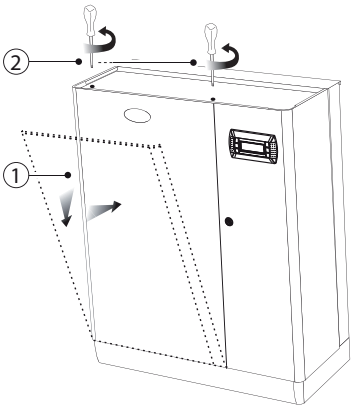

Fig. 1.h

1. slide the panel on the base, keeping it slightly tilted;
2. put it in vertical position and tighten the screws on the top cover with a screwdriver.

Caution: in models UR020...UR080 open the electrical compartment of the humidifier using the slotted lock.

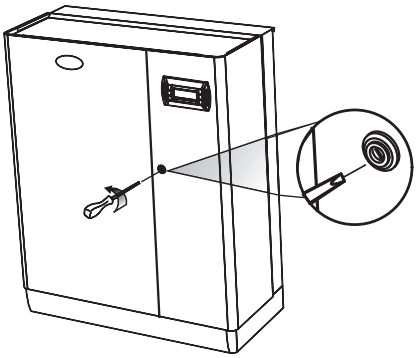

Fig. 1.i

1.8 Material supplied with the appliance

Once the packaging opened and the front panel removed, check if there is a:

screws and anchor kit for wall mounting

only for models UR020...UR080: Code FWHDCV0003 non-return valve with connection tube

1.9 Technical data plate

Humidifiers can be identified by means of the technical plate placed on the partition wall of the electrical cabinet.

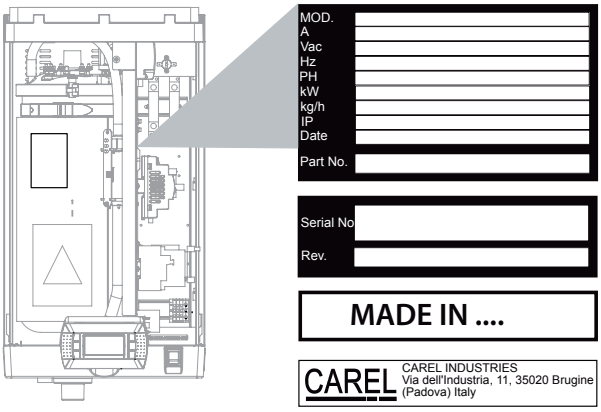

Fig. 1.j

Note: tampering, removal, lack of the identification plate or other does not allow the safe identification of the product and will make any installation or maintenance operation to be performed difficult.

1.10 Water circuit

Models UR002 – UR013

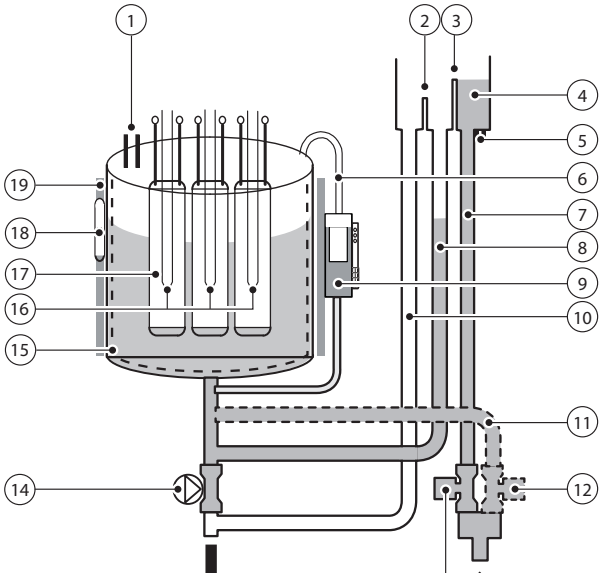

Fig. 1.k

Models UR020 – UR080

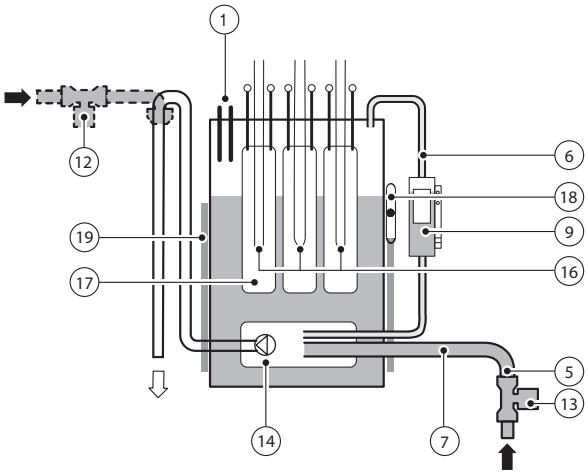

Fig. 1.l

1	Anti-foaming sensor	11	Drain tube tempering (*)
2	Overfill diaphragm	12	Drain valve tempering (*)
3	Fill diaphragm	13	Inlet valve
4	Feed tank	14	Drain pump
5	Electrodes for conductivity measurement	15	Anti-adhesive film (**)
6	Equaliser pipe	16	Overtemperature sensors (PTC)
7	Feed pipe	17	Heaters
8	Fill-up pipe	18	Water temperature sensor (NTC) (**)
9	Level sensor	19	Thermal insulation
10	Overflow pipe/drain		

(*) for the units equipped with it
(**) for full option modules only

1.11 Layout of models UR002 – UR0013

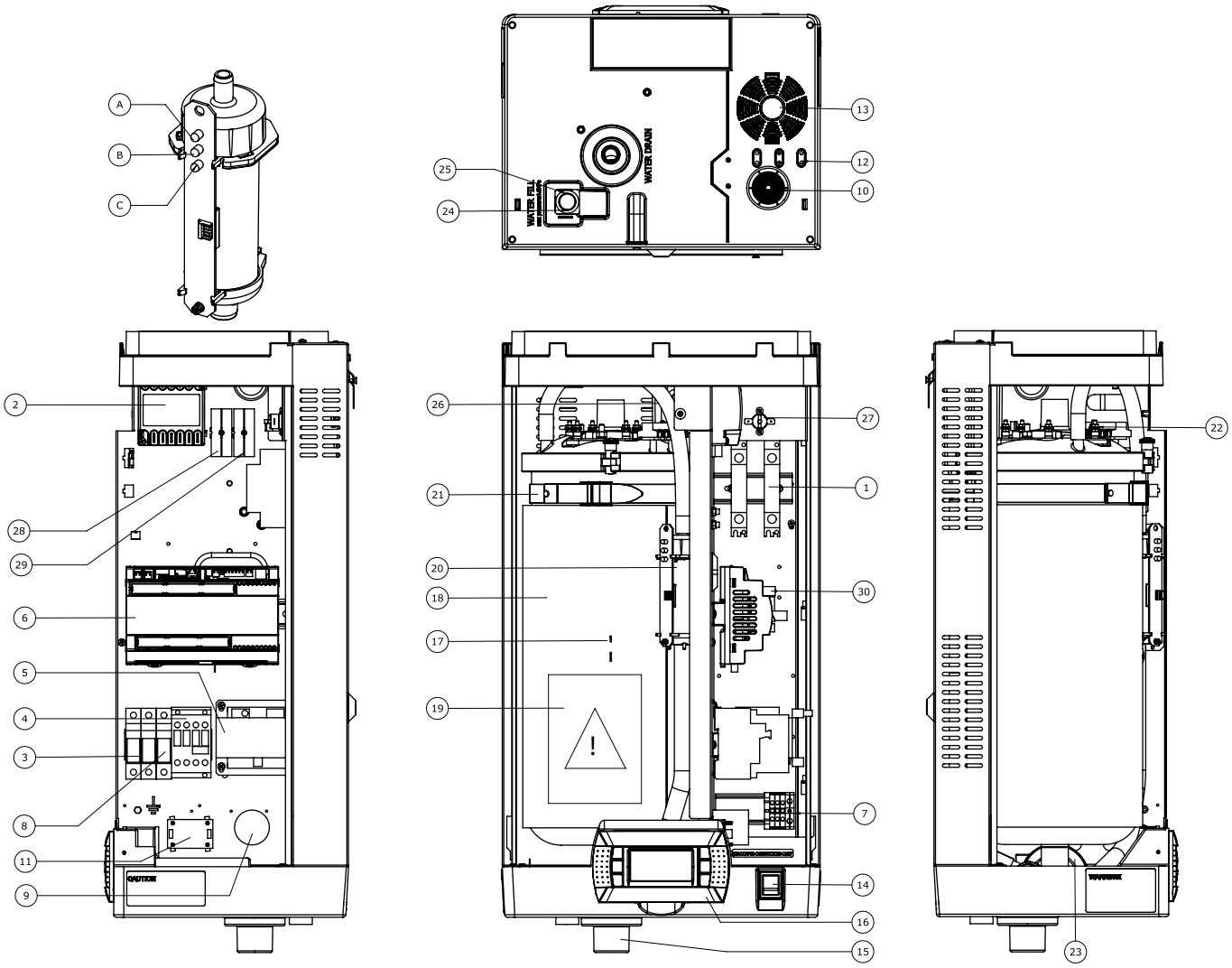

Fig. 1.m

Key:

1	Solid state relay (SSR)
2	Motor protector (THP)
3	Fuse carrier (F1, F2)
4	Contactor
5	Transformer
6	Electronic controller
7	Power cable terminal block
8	Pump fuse (F3)
9	RF interference suppressor (where envisaged)
10	Power cable gland
11	Fan control board
12	Auxiliary cable glands
13	Cooling fan
14	ON/OFF switch
15	Drain
16	Display
17	NTC probe socket
18	Boiler
19	Warning label
20	Level sensor
	A – Green LED: normal operation
	B – Yellow LED: fill
	C – Red LED: minimum level
21	Fastening strap
22	Heater
23	Drain pump
24	Fill valve
25	Drain tempering valve (where envisaged)
26	Feedwater tank
27	SSR thermal protector (Klixon)
28	X1-X2 (prepared for ventilated steam distributors connections)
29	X3-X4 (prepared for external drain tempering valve) - where envisaged
30	Drain pump relay

1.12 Layout of models UR020 – UR0080

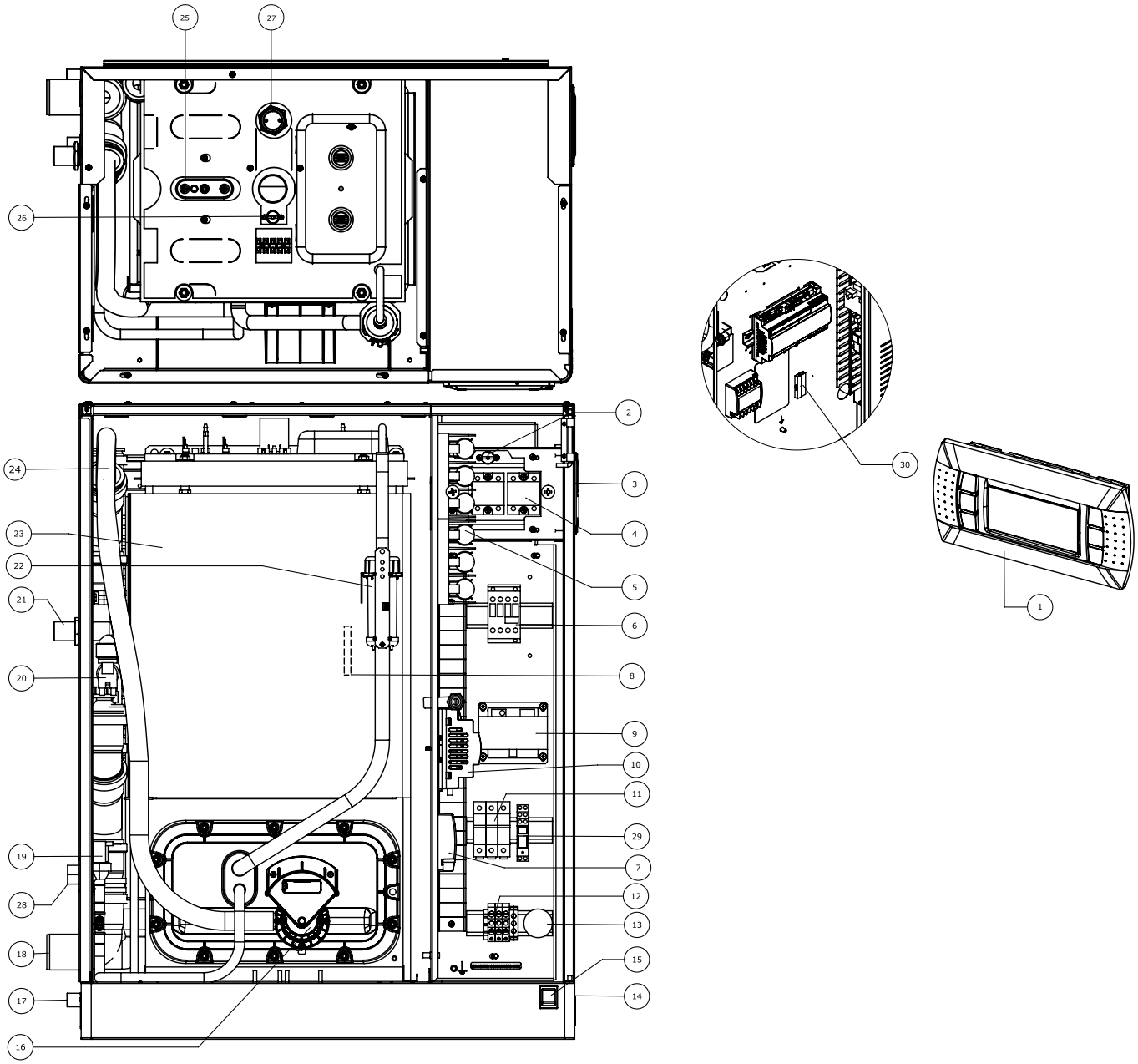

Fig. 1.n

Key:

1	Display
2	SSR thermal protector (Klixon)
3	Cooling fan
4	Solid state relay (SSR)
5	Heater fuses (where envisaged)
6	Contactor
7	Motor protector (THP)
8	NTC probe socket
9	Transformer
10	Control board
11	Fuse carrier (F1, F2, F3)
12	Power cable terminal block
13	RF interference suppressor (where envisaged)
14	Power cable inlet
15	ON/OFF switch
16	Drain pump
17	Drain collection tank (∅ 19 mm)
18	Drain
19	Fill valve
20	Drain tempering valve (where envisaged)
21	Drain tempering inlet (where envisaged)
22	Level sensor
23	Boiler
24	Drain pipe
25	Heater
26	Boiler thermal protector (Klixon)
27	Foam detection sensor
28	Water fill
29	Drain pump relay
30	X3-X4 (prepared for external drain tempering valve) - where envisaged

2. HYDRAULIC CONNECTIONS

Important: before making the water connections disconnect the humidifier from the power supply.

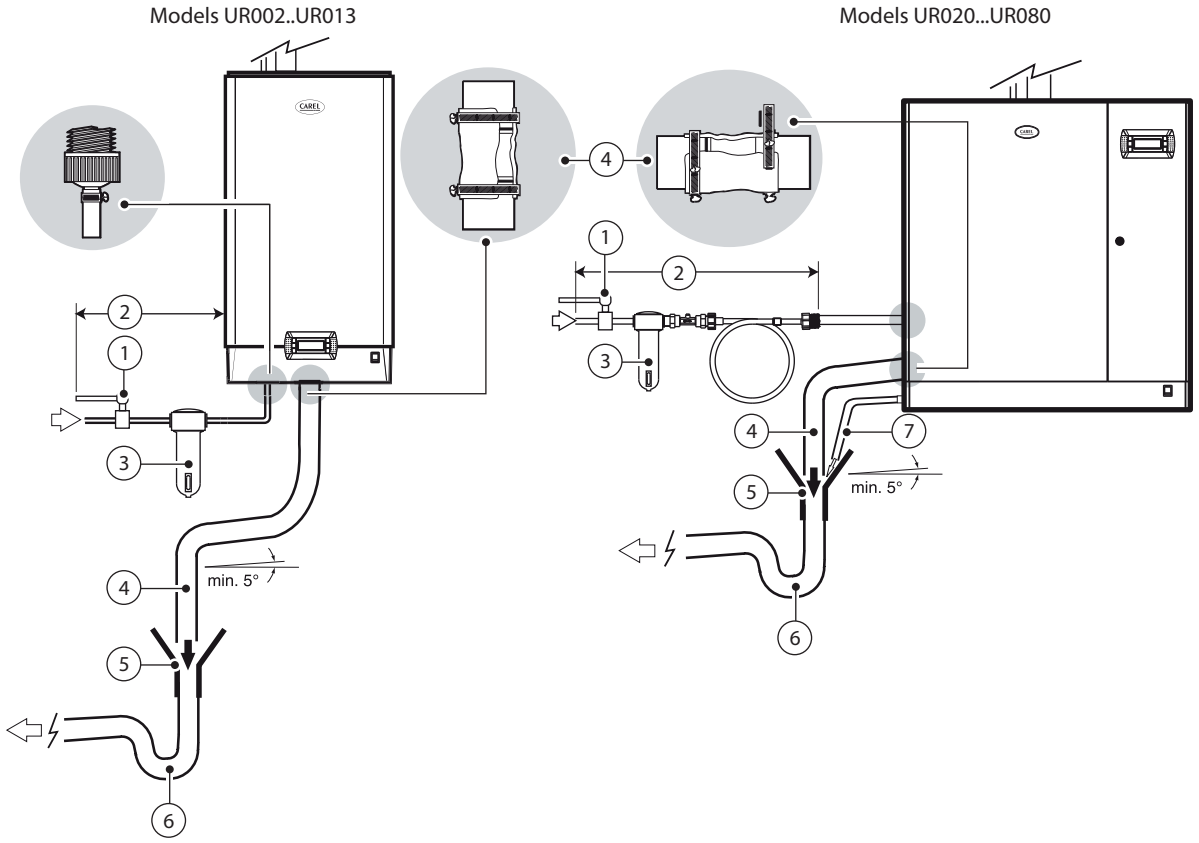

Fig. 2.a

WATER CONNECTIONS:

1. install a manual valve upstream (to cut off the water supply);
2. connect the humidifier to the water supply. For UR002...UR013 models, use a flexible pipe 3/4"G connection. For UR020...UR080 models connect the flexible pipe with the non-return valve (supplied - code FWHDCV0003), to avoid the water inside the humidifier making contact with the one in the mains;
3. install a mechanical filter to retain any solid impurities (connect downstream with respect to the tap.
4. connect a section of pipe for draining (resistant to temperatures of 100 ° C (212 ° F)) and with a minimum internal diameter of 40 mm (1.6 in) for models UR002-UR013 and 50 mm (2 in), for models UR020 UR080; for drain tempering versions, water temperature will be 60 °C (140 °F), with temperature is max 25 °C guaranteed;
5. provide a funnel to ensure continuity interruption in the drain piping;
6. connect a P-trap to prevent the return of odours;
7. for models UR020...UR080: connect a drain pipe from the tank to the bottom of the humidifier (this can run into the funnel used for draining).
8. for drain tempering versions, water temperature will be 60°C (140°F) with temperature is max 25°C (77°F) guaranteed.

Caution:

- once the installation is complete, flush the supply pipe for about 30 minutes by carrying water directly in the drain and without introducing it into the humidifier. This will eliminate any waste or processing residues that could clog the inlet valve and/or cause foam when boiling water;
- the drain pipe must run vertically downwards at least 30 cm (figure 2.a) to prevent the return of steam.

Set up for water connections:

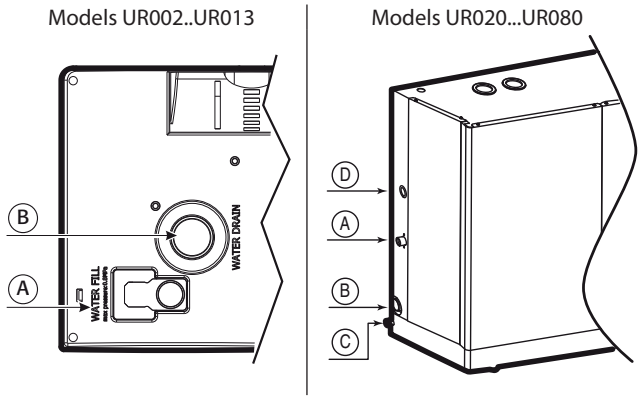

Fig. 2.b Fig. 2.c

Key:

A	Supply water inlet (also drain tempering inlet for UR002-UR013)
B	Drain water outlet
C	bottom tank drain water outlet (only for models UR020-UR080)
D	Drain tempering inlet

Water connection heights:

Drain / Fill

Models UR002…UR013 (view from below):

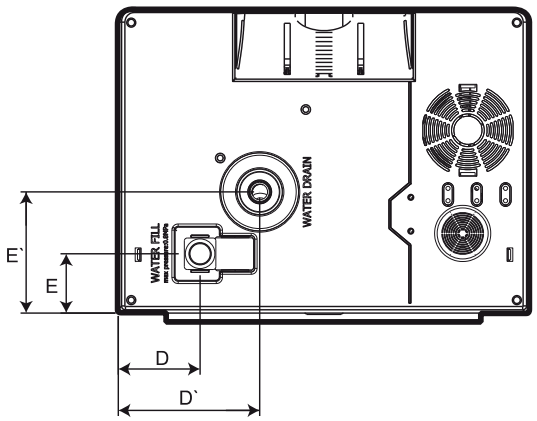

Fig. 2.d

mm (in)

D	75 (2.95)	E	62 (2.44)
D'	126 (4,96)	E'	116 (4.57)

Water fill	Water fill	Water drain	Water drain

Steam exhaust and condensate drain

Models UR002…UR013 (top view):

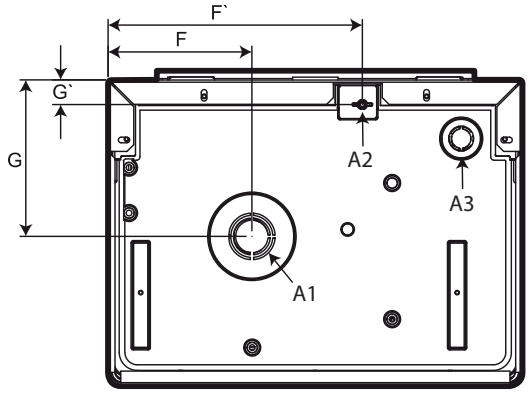

Fig. 2.f

size mm (in)	Models UR002-UR013
F	126.7 (5)
F'	224 (8.8)
G	137.9 (5.4)
G'	21.7 (0.85)

A1	Steam outlet
A2	Juncture for the steam distributor condensate drain pipe
A3	Fan head power cable passageway (ancillary)

Models UR020…UR080 (left side view):

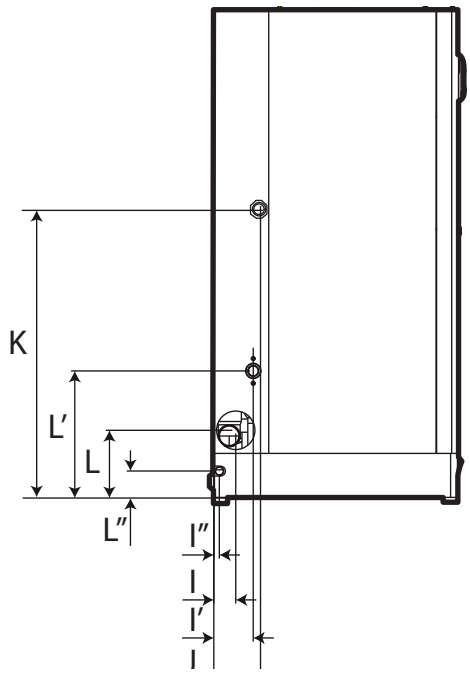

Fig. 2.e

mm (in)

I	50 (1.96)	L'	230 (9.0)
I'	120 (4.72)	L"	54 (2.1)
I"	20 (0.78)	J	132(5.2)
L	122 (4.8)	K	571(22.5)

Water fill	Water fill	Water drain	Water drain

Models UR020…UR080 (top view):

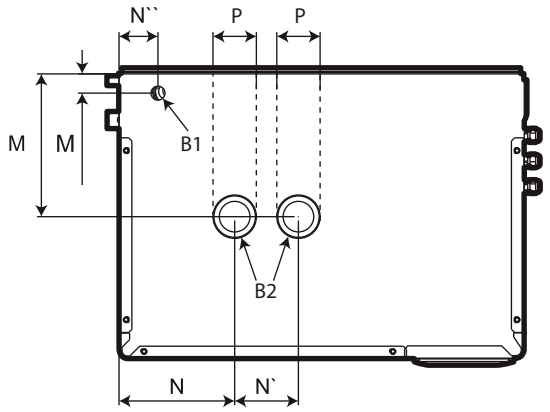

Fig. 2.g

size mm (in)	Models UR020...UR040	Models UR053-UR080
M	172 (2.0)	172 (6.8)
M'	31 (1.2)	52 (2.0)
N	273 (10.7)	260 (10.2)
N'	---	190 (7.4)
N"	46 (1.8)	52 (2.0)
P	60 (2.4)	60 (2.4)

B1	Set up for steam distributor condensate drain pipe
B2	Steam outlet

2.1 Supply water

The supply water for the electric heater humidifier must not be corrosive, must not emit bad odours, and must not contain too much lime to avoid excessive deposits. The water, supplied from mains of drinking water or demineralised water, must have the following characteristics:

LIMIT VALUES FOR THE HEATER HUMIDIFIER WATER

		Min	Max
Specific conductivity at 20°C /68°fH	σ20 - µS/cm	0	1500
Total dissolved solids	TDS – mg/l	(1)	(1)
Fixed residual at 180°C/ 356°fH	TDS – mg/l	(1)	(1)
Hydrogen ion activity	pH	6	8.5
Total hardness	TH– mg/l CaCO3	0 (2)	400
Temporary hardness	mg/l CaCO3	0 (3)	300
Chlorides	ppm Cl	=	50(4)
Iron + Manganese	mg/l Fe+Mn	=	0.2
Silica	mg/l SIO2	=	20
Residual Chlorine	mg/l Cl-	=	0.2
Calcium sulphate	mg/l CaSO4	=	100
Metallic impurities	mg/l	0	0
Solvents, diluents, detergents, lubricants	mg/l	0	0

Tab. 2.a

1. Values depending on the specific conductivity; in general: TDS ≈0,93 * σR, 20 °C; R180 ≈0,65 * σR , 20 °C;
2. Not lower than 200% the content of chloride in mg/l Cl- ;
3. Not lower than 300% the content of chloride in mg/l Cl- ;
4. It could be necessary to intervene on the drain rate to avoid a concentration in the boiling water higher than 300 mg/l Cl-;

For particularly aggressive water (conductivity <1 µS/cm), use titanium heaters (heaterSteam titanium model).

Important: water treatment with polyphosphates or water softeners is allowed, guaranteeing at least 60% of the initial hardness value and no less than 5°f.
Softened water reduces maintenance requirements.
Softened water favors the concentration of dissolved salts in the water inside the boiler, with the consequence of foam formation.

Not recommended:
1. the use of well water, industrial water or water from cooling circuits and, in general, water which may be chemically or bacteriologically contaminated;
2. the addition to the water of disinfectants or anticorrosion compounds, as these may cause irritation.

Note: no relationship can be proven between water hardness and conductivity; nonetheless, as an indication only, water with a hardness of 40°f should have a conductivity of approximately 900-1000 mS/cm a 20 °C.

2.2 Drain water

- contains the same substances dissolved in the supply water, but in larger amounts;
- it can reach a temperature of 100 °C (212° F);
- it is not toxic and can be drained in the white waters collection system.

3. for drain tempering versions, water temperature will be 60°C (140°F), with temperature is max 25 °C guaranteed.

Important: completely demineralised water is aggressive. For connection to a water system with fully demineralized water use only installation items made of plastic resistant to chemicals (eg. Polypropylene) or stainless steel.

3. STEAM DISTRIBUTION

3.1 CAREL steam nozzles (SDPOEM00**)

Compact steam distributors for small ducts or applications such as steam baths. They can be mounted either horizontally or vertically (steam exhaust facing upwords).

Mounting instructions (see figure):
1. drill a series of holes in the wall of the pipe, using the drilling jig of the distributor;
2. insert the distributor;
3. fasten the flange of the distributor using 4 screws.

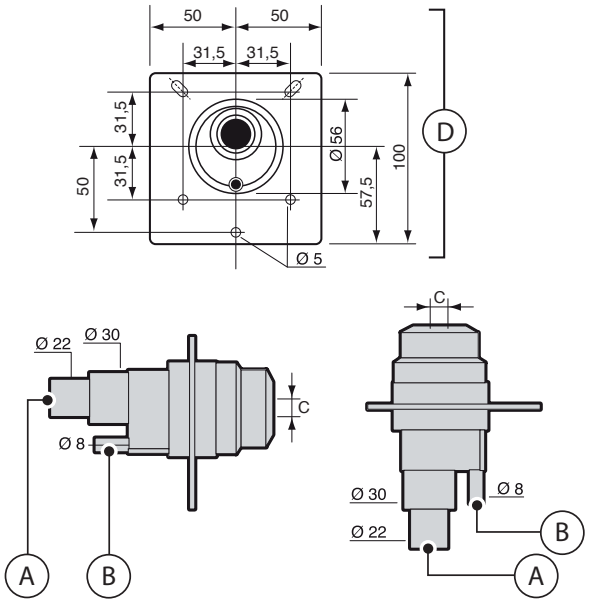

Fig. 3.a

Key:

A.	steam inlet
B.	condensate drain
C.	steam outlet The hole dimensions vary depending on the distributor model: • model SDPOEM0000: hole to be drilled manually, up to 30 mm (1.2 in) diameter; • model SDPOEM0012: hole diameter 12 mm (0.5 in); • model SDPOEM0022: hole diameter 22 mm (0.9 in);
D.	drilling jig

Note: if using steam hoses with an inside diameter of 30 mm (1.2 in), remove the 22 mm (0.9 in) inlet section from the steam nozzle.

3.2 CAREL linear distributors for air ducts or AHUs (DP***DR0)

The steam distributors for AHU or duct applications deliver steam along their entire length in order to ensure the shortest not-wetting distance. The distributor should be chosen based on the maximum required capacity, the dimensions of the AHU/duct and the outlet diameter of the humidifier it is connected to. Install far from any obstacle (curves, ramification, section changes, grilles, filters, fans).

Minimum distance between distributor and obstacle: 1…1.5 m (3.3…4.9 ft).

Increase distance in case of:
1. increase in speed of the air in the duct;
2. turbulence decrease.

Mounting instructions (see figure):
- drill a series of holes in the wall of the pipe, using the drilling jig of the distributor (found in the packaging of the distributor);
- insert the distributor with the steam outlet holes facing upwards;
- fasten the flange of the distributor using 4 screws.

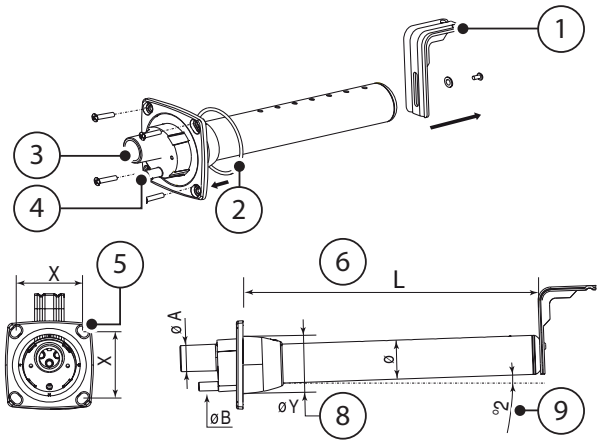

Fig. 3.b

Key:
1. L-shaped mounting bracket (where applicable)
2. flange gasket
3. steam inlet (ØA)
4. condensate drain (ØB)
5. flange screw (see instructions sheet that comes with the distributor)
6. L = length (depending on the model of distributor, see paragraph "Linear distributors")
7. tilt angle (about 2 °) for condensate drain
8. diameter of the hole in the wall (ØY)

Size in mm (in)

	linear distributors from CAREL		
	DP***D22R0	DP***D30R0	DP***D40R0
ØA	22 (0.9)	30 (1.2)	40 (1.6)
ØB	10 (0.4)	10 (0.4)	10 (0.4)
ØY	58 (2.3)	68 (2.7)	89 (3.5)
Ø	35 (1.4)	45 (1.8)	60 (2.4)
X	68 (2.7)	77 (3.0)	99 (3.9)

Tab. 3.a

Caution:

1. mount the distributor slightly tilted (at least 2°, to facilitate the condensate discharge);
2. the L-shaped supports (see element 1 Fig. 3. b) is supplied with steam distributors models from DP085* to DP205*. For shorter lengths the bracket can be supplied as optional (code 18C478A088).

3.3 CAREL blowers for room installation (VSDU0A*, VRDXL*)

Steam distributors for installation in rooms. These come with a fan to assist steam absorption. The VSDU0A* blowers can be used on humidifiers with flow-rates up to 18 kg/h (39.7 lb/h), i.e. models UR002… UR013. They can be connected to the top of the humidifier, or separately in a remote position using the fastening support VSDBAS0001 (see Fig. 3.c). These distributors have a power supply inside the electrical panel (24 Vac, Terminals X1, X2).

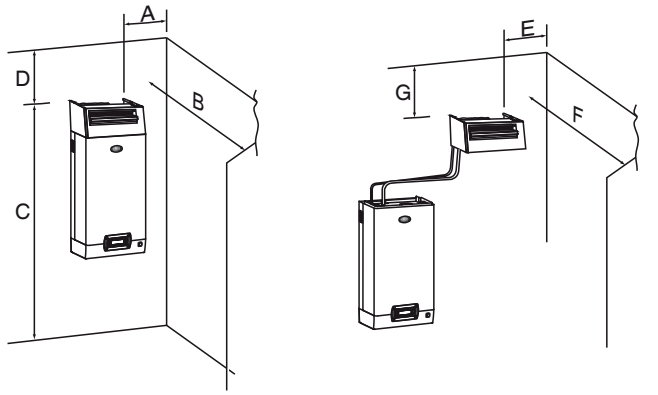

Fig. 3.c

A	> 0,5 m (>19.6")	E	> 0,5 m (>19.6")
B	> 5 m (>196.8")	F	> 5 m (>196.8")
C	> 2,1 m (>82.6")	G	> 1 m (>39.4")
D	> 1 m (>39.4")		

Caution: in order to achieve proper steam distribution observe the distances indicated in the fig. above.

For the humidifiers larger than 18 kg/h, the are ventilated steam distributors code VRDXL00000 with 230 Vac power supply, external power supply (maximum capacity 45 kg/h). The distributors are designed for installation in a remote position, and require two steam hoses with a 30 mm diameter, c
connected to a "Y" adapter (available as accessories, contact Carel for details on the product code).

C	> 1,8 m (>70.8")	E	> 0,9 m (>35.4")
D	> 1,2 m (>47.2")	F	> 3 m (>118.9")
		G	> 1,2 m (>47.2")

In this case, terminal J19.1 on the control board is used as a voltage-free contact (normally open when there is no production - SSR OFF). **This contact has a maximum rating of 2 A.**

3.4 Steam transport pipe

- use CAREL flexible hoses (max 4 m long, see section "Models of steam conducting pipes");
- avoid the formation of pockets or traps (cause of condensate accumulation)
- avoid choking the pipe with sharp bends or twists.
- Use metal clamps to fasten the ends of the pipe to the connections on the humidifier and the steam distributor, so that they do not come loose as a result of the temperature.
- avoid strains which include mechanical stress on the cylinder steam outlet tailpiece

3.5 Condensate drain pipe

During the operation of the humidifier part of the steam can condense, causing efficiency loss and noise (gurgling).
To drain the condensate connect to the base of the distributor a discharge pipe with a water trap and a minimum slope of 5° (see fig.3.d).

CAREL condensate drain pipes: code 1312368AXX (ø 10mm) - (CHOSE00516 (5/16") for North American market) for DP* series linear steam distributors; code 1312353APG (ø 7mm) - (CHOSE0038 (3/8") for North American market) for steam blowers and nozzles.

Caution: the condensate drain pipe trap must be filled with water prior to turning on the humidifier.

Below are show some installation examples of the steam transport and condensate drain pipes:

All the UR models

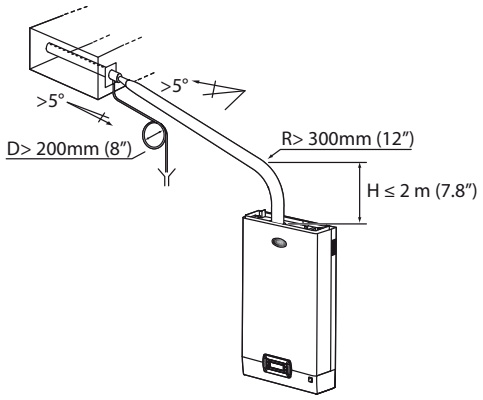

Fig. 3.d

Models UR002...UR013 (1), condensate drain connection with return to fill tank:

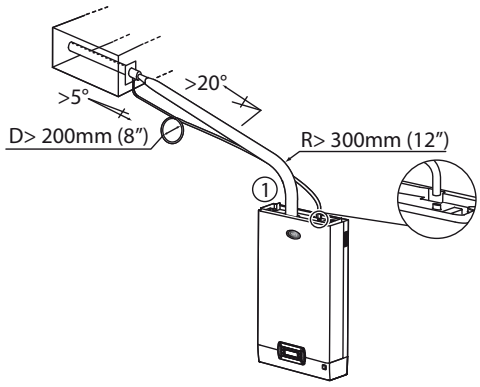

Fig. 3.e

Models UE020...UR080 (1) extend the pipe inside the humidifier up to the base tank.

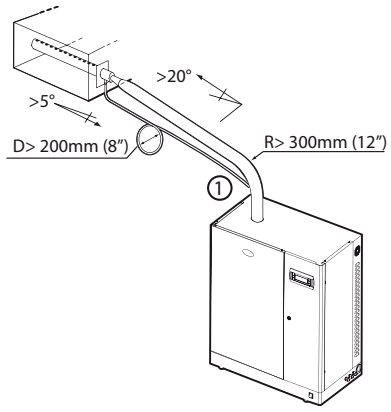

Fig. 3.f

All the UR models

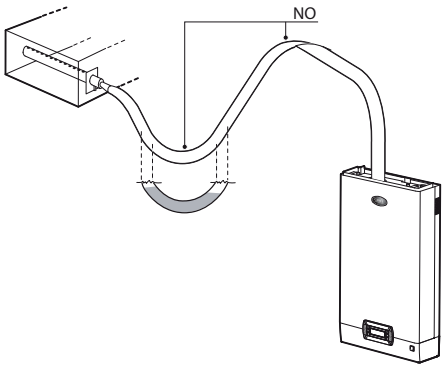

Fig. 3.g

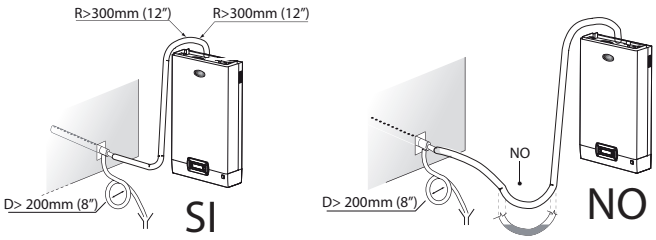

Fig. 3.h

3.6 Outlet pressure limits

The backpressure at the boiler outlet, either positive or negative, depends both on the relative pressure in the duct/AHU and the pressure drop in the steam pipe, due to bends or adapters, and the steam distributor.
Carel steam transport pipes have a pressure drop of around 150 Pa/m (0.021psi) (respecting the maximum flow-rate recommended by Carel).
Carel DP* series linear distributors have a pressure drop of around 25 Pa (0.003psi) (respecting the maximum flow-rate recommended by Carel).
Considering these values, the boiler outlet pressure must be:

boiler outlet pressure > 150 [Pa/m] * steam pipe length [metres] + 25 [Pa] DP + pressure in duct/AHU [Pa]

Boiler outlet pressure values for heaterSteam:

	UR002…R013	UR020…UR080
pressure limits at boiler outlet Pa (PSI)	0 to 1500 (0 to 0.218)	0 to 2000 (0 to 0.290)

Note: a pressure of around -200 Pa (-0.029 psi) at the boiler outlet corresponds to around 20 mm (0.78") of water inside the boiler (for all sizes).

4. ELECTRICAL CONNECTIONS

4.1 Wiring provisions

Models UR002-UR013

Outside, bottom view

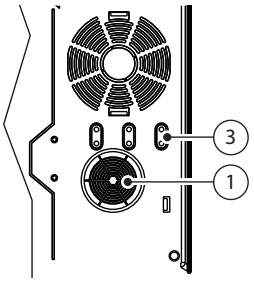

Fig. 4.a

Inside, top view

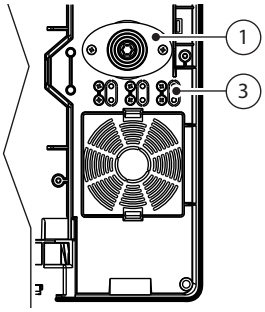

Fig. 4.b

Models UR20-UR80

Outside, side view

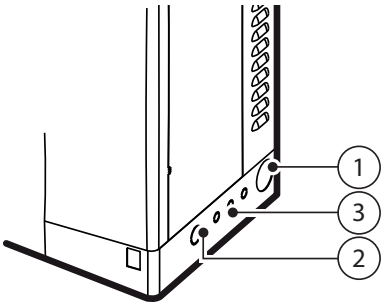

Fig. 4.c

Key:
1. power supply cable inlet;
2. inlet (after removing the knock-out) for other uses;
3. probe cables inlet (after removing the knock-outs).

4.2 Power cable connection

Before making the connections, make that the unit is disconnected from the mains power supply: move the main system switch and humidifier switch to OFF).

Important: the humidifier ON/OFF switch disconnects power only to the electronic controller, and not the other devices, which therefore remain powered.

Check that the unit's power supply voltage corresponds to the rated value shown inside the electrical panel. Remove the front panel as explained in chap. 1.
To enter the power and probe cables, see the follow the procedures described below:

Models UR002-UR013
1. unscrew the screws and remove the cover (A);
2. if necessary, cut the top part of the conical cable gland (B) and insert the power cable;
3. connect the electrical wires to the terminal block, reposition the cover and fasten it using the screws;

To attach the probe cable:
4. remove the knock-out (C) and unscrew the screws;
5. insert the probe cable through the opening created: then fasten the cable using the screws.

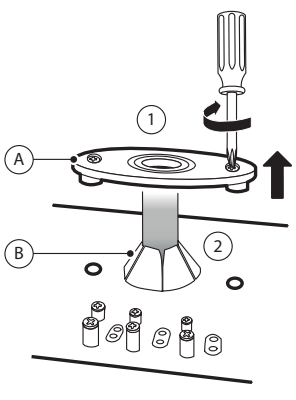

Fig. 4.d

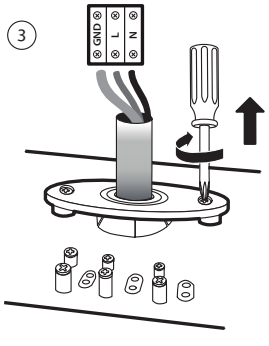

Fig. 4.e

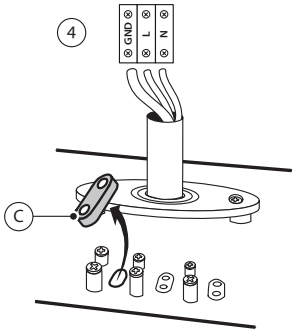

Fig. 4.f

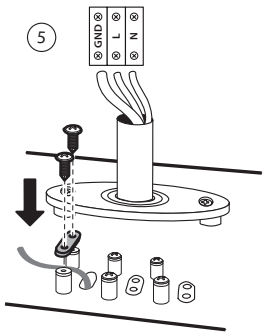

Fig. 4.g

Models UR020-UR080
1. identify the rubber cable gland (A) on the right side of the unit and insert the power cable;
2. inside the electrical panel: unscrew the cable gland (B), connect the wires to the terminal block and tighten the screws again to fasten the cable.

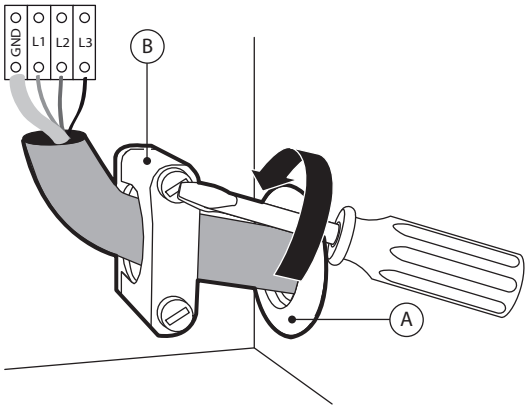

Fig. 4.h

The humidifier power line must be fitted by the installer with a disconnect switch and fuses to protect against short circuits. The table shows the recommended sizes of the cable and fuses; nonetheless, these data are purely indicative and, if different from local standards in force, the latter must prevail.

Note: to avoid unwanted interference, the power cables should be kept separate from the probe signal cables.

Important: connect the yellow-green wire to the earth terminal (GND).

4.3 Control board

The control board (S) is inside of the electrical panel in the wall dividing.

The auxiliary connections (probes, remote terminal, alarm) are made by inserting the cables form the outside into the electrical panel.

To do this, use cables gland located on the base of the unit to the plug-in screw terminals on the control board.

UR002-UR013

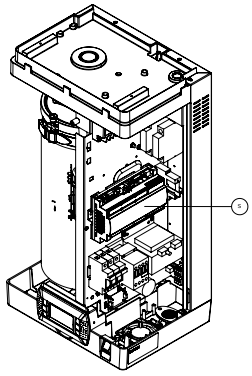

Fig. 4.i

UR020-UR080

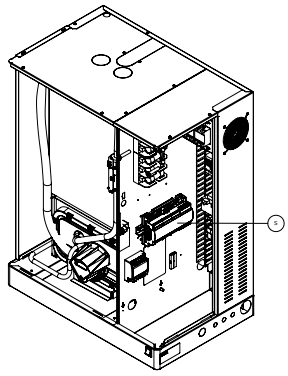

Fig. 4.j

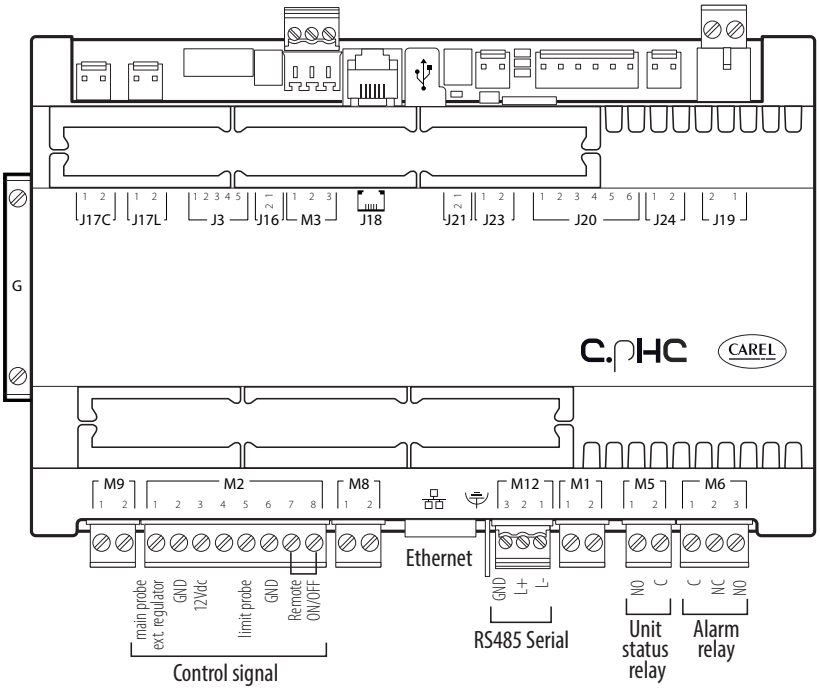

Fig. 4.k

Key:

Terminal		Function	Electrical specifications
M1	M1.1	GND (G0)	
	M1.2	Controller power supply	24Vac +10%/-15% 50/60Hz
M2	M2.1	Main room probe signal input or signal from external controller	0/1V, 0/10V, 2/10V, 0/20mA, 4/20mA, NTC 10 kΩ a 25 °C
	M2.2	GND	
	M2.3	Probe power supply (+G)	+12 Vdc, maximum current that can be delivered 50 mA; Protection against short-circuits
	G	Probe power supply (+G)	CAREL 0-10 V
	M2.4	Digital input for backup/ rotation function	Maximum current output: 5 mA; Maximum voltage with contact open: 13 Vdc
	M2.5	Limit humidity probe signal input	0/1V, 0/10V, 2/10V, 0/20mA, 4/20mA, NTC
	M2.6	GND	
	M2.7	GND	
	M2.8	Remote on/off contact digital input	Maximum current output: 5 mA; Maximum voltage with contact open: 13 Vdc
M3	M3.1	Fieldbus	Tx/Rx-
	M3.2		Tx/Rx+
	M3.3		GND
M5	M5.1	Unit status contact (NO)	250 Vac; 2 A with resistive load; 2 A with inductive load
	M5.2	Unit status contact common	
M6	M6.1	Alarm common	250 Vac; 2 A with resistive load; 2 A with inductive load
	M6.2	NC alarm contact	
	M6.3	NO alarm contact	

Terminal		Function	Electrical specifications
M8	M8.1	Production request analogue output	Output voltage range: 0-10 V max 10 mA
	M8.2	GND	
M9	M9.1	Backup and rotation contact common	250 Vac; 2 A with resistive load; 2 A with inductive load
	M9.2	Backup and rotation NO contact	
M11		Ethernet port	
M12	M12.1	BMS 485	Tx/Rx-
	M12.2		Tx/Rx+
	M12.3		GND
⏚		Earth connection	
J18		pLAN/display terminal	
J19	J19.1	Auxiliary/blower contact (NO)	250 Vac; 2 A with resistive load; 2 A with inductive load
	J19.2	Auxiliary/blower contact common	
		USB Port (type A)	
		Ethernet RJ45 Port	

Tab. 4.b

4.4 Operating and control principles

Before describing each electrical connection on heaterSteam, below are some fundamental aspects regarding the control of steam humidifiers.

4.4.1 Operating principle of a heater humidifier

HeaterSteam is an isothermal steam humidifier whose technology uses heaters immersed in a cylinder or boiler filled with water. This may be mains water or demineralised water. The heat generated by the heaters increases the water temperature up to around 100°C (212°F). The use of demineralised water ensures long cylinder and heater life, as virtually no scale builds up. On the other hand, if using mains water, some of the minerals dissolved in the water accumulate in the cylinder as solids with different compositions. To prevent this from occurring, when the water conductivity in the cylinder exceeds a certain value, some of the water is periodically drained and replenished, thus diluting the water. In models where featured, the drain water is mixed with mains water so as to not exceed the maximum temperature allowed by national and local standards in force (drain tempering function). The steam generated has a temperature of around 100°C (212°F) and minimal positive pressure (unpressurised steam). It is virtually free of minerals and germs. Steam production is controlled with ON/OFF logic or with continuous modulation from 0% to 100% of rated output, using solid state relays (SSR); the control logic in this case is PWM (i.e. pulse width modulation) with a programmable time base.

4.4.2 Control principles

The appliance is fitted with solid state relays (SSR), meaning steam production is continuously adjustable based on demand, in one of the following modes.

4.4.3 ON/OFF control

Operation is all or nothing, and is activated by an external contact; the maximum percentage of unit production can be set.

4.4.4 Proportional to an external signal (modulating control)

Steam production is proportional to the value of an external signal Y, (selectable by programming one of the following standards: 0 to 1 Vdc; 0 to 10 Vdc; 2 to 10 Vdc; 0 to 20 mA; 4 to 20 mA). The maximum production Pmax corresponds to the maximum value of the external signal Y and will be the humidifier's rated production. The activation hysteresis hy is settable by the user and refers to the external signal Y.

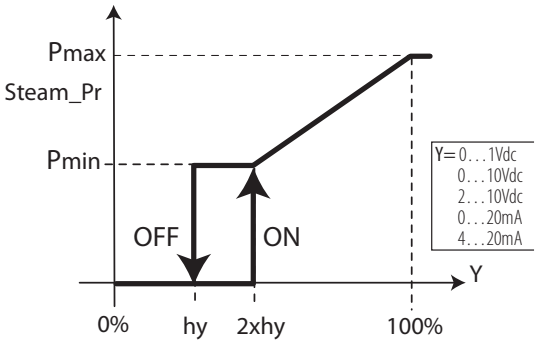

Fig. 4.l

Key:

Steam_pr	Steam production	Y	External signal
P0	Max production	hy	Activation hysteresis
Pm	Min production		

Note: the graph shown above applies when the pre-heating function is disabled.

4.4.5 Autonomous control with humidity probes

Steam production is related to the % rH reading made by the relative humidity probe and increases as the value read deviates from the set point St. Maximum production Pmax corresponds to the case where the humidity value, read by the probe, is BP away (proportional band) from the set point. The activation hysteresis hy is settable by the user.

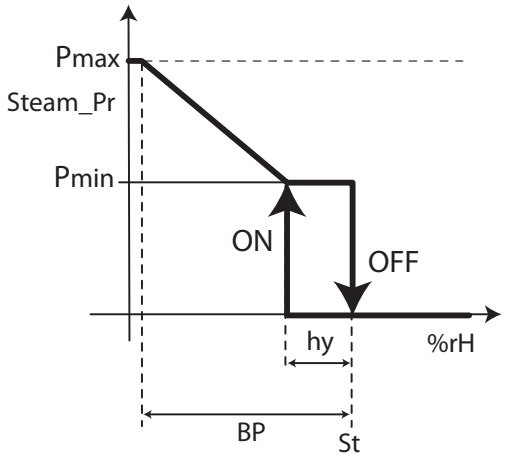

Fig. 4.m

Key:

Steam_pr	Steam production	Y	External signal
P0	Max production	hy	Activation hysteresis
Pm	Min production		

To check that the relative humidity measured by the transducer is within certain preset values, two alarm thresholds can be set in autonomous control:

- high relative humidity alarm threshold;
- low relative humidity alarm threshold.

When these thresholds are exceeded, an alarm is activated by closing the corresponding relay contact on the main control board.

4.4.6 Autonomous control with relative humidity transducer and outlet limit probe

In this case too, the controller modulates steam production based on the % rH measured by the main relative humidity transducer, while limiting production if the humidity measured by a second limit transducer, located in the air duct downstream of the steam distributor, approaches the maximum desired value. Consequently, to prevent the relative humidity of the outlet air from exceeding a value that is considered excessive, the control module with autonomous control and limit transducer can be set with a high relative humidity alarm threshold. When this threshold is exceeded, the alarm is activated by closing the corresponding relay contact on the main control board. The limit probe allows steam production to be modulated depending on the specific set limit differential.

4.4.7 Application for steam baths

In applications for steam baths, in which the control probe measures temperature rather than humidity, the same rules apply as for autonomous control with probe.

By setting control to temperature, the humidifier will continue to produce steam until reaching the desired set point temperature inside the steam bath, and consequently the desired saturation of the air (fog effect).

Recommended CAREL transducer: ASET030001 or ASET030000, or NTC probes UEKNTC0*.

4.5 Steam production control signals

The humidifier features solid state relays (SSR) for modulating steam production, and consequently capacity may range from 1 to 100% of output, depending on control requirements. The humidifier can be connected via RS485 serial or Ethernet connection to a remote supervisor. Depending on the type of signal used, steam production can be enabled and/or managed in different ways (ON/OFF or modulating).

Important: the probe inputs are protected against short-circuits, and the maximum current delivered (M2.3) is 50 mA. Despite this, it is recommended to configure the "Control type" before connecting the probes to the terminals.

To help users configure the unit, a screen index is shown at the top right of the display. The screen index corresponds to the sequence in each menu in order to reach the specific page.

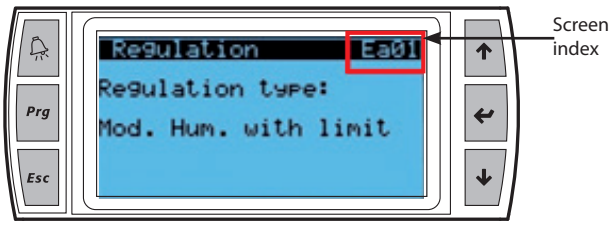

Fig. 4.n

Steam production can be started by:

HUMIDISTAT (ON/OFF operation):

- connect terminals M2.1 and M2.2 (production request) to a humidistat;
- short-circuit terminals M2.7 – M2.8 (jumper) to enable production;
- to enable ON/OFF operation, set:

Screen index	Screen description	Parameter
Ea01	Control type	External ON/OFF signal
Ea04	Maximum production	0-100% of rated production

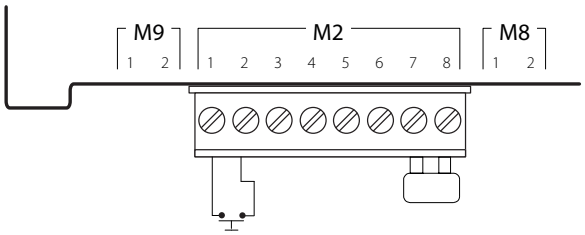

Fig. 4.o

HUMIDISTAT and REMOTE CONTACT (ON/OFF operation)

- connect terminals M2.1 and M2.2 (production request) to a humidistat;
- connect inputs M2.7 – M2.8 (enable) to a remote contact (e.g.: switch, timer,...);
- to enable ON/OFF operation, set:

Screen index	Screen description	Parameter
Ea01	Control type	External ON/OFF signal
Ea04	Maximum production	0-100% of rated production

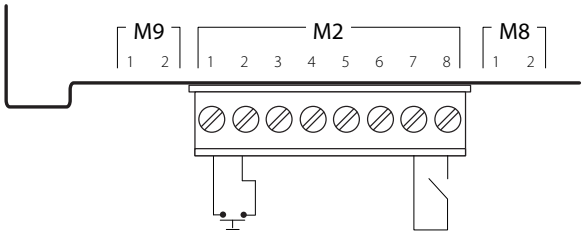

Fig. 4.p

Steam production can be enabled and controlled by:

EXTERNAL PROPORTIONAL CONTROLLER (modulating operation)

- short-circuit terminals M2.7 – M2.8 (jumper) to enable production;
- connect terminals M2.1 and M2.2 (production request) to an external controller;
- to enable control, set:

Screen ind.	Screen desc.	Parameter
Ea01	Control type	proportional to external signal
Ea03	Proportional band	Set: Hysteresis (0-100%) Minimum production (0-100%) Maximum production (0-100%)
Ec01	Main probe type	Select from: 0-1V, 0-10V, 2-10V, 0-20mA, 4-20mA

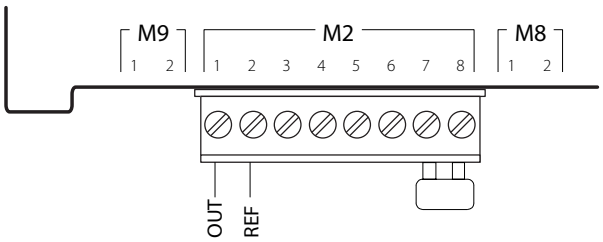

Fig. 4.q

EXTERNAL PROPORTIONAL CONTROLLER and REMOTE CONTACT (modulating operation)

- connect terminals M2.1 and M2.2 (production request) to a humidistat;
- connect inputs M2.7 – M2.8 (enable) to a remote contact (e.g.: switch, timer,...);
- to enable control, set:

Screen ind.	Screen desc.	Parameter
Ea01	Control type	proportional to external signal
Ea03	Proportional band	Set: Hysteresis (0-100%) Minimum production (0-100%) Maximum production (0-100%)
Ec01	Main probe type	Select from: 0-1V, 0-10V, 2-10V, 0-20mA, 4-20mA

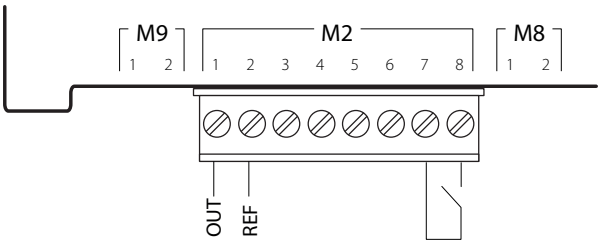

Fig. 4.r

EXTERNAL PROPORTIONAL CONTROLLER and REMOTE CONTACT (modulating operation) with LIMIT PROBE

- short-circuit terminals M2.7 – M2.8 (jumper) to enable production; alternatively connect terminals M2.7 – M2.8 to a remote contact (e.g.: switch, timer,...);
- connect terminals M2.1 and M2.2 (production request) to an external controller;
- connect the active limit probe to terminals M2.5, M2.3 (+12Vdc), M2.6 (GND);

Note: when using Carel 0-10V probe, connect the probe power supply +(G) to terminal "G" on the board rather than terminal M2.3.

- to enable control, set:

Screen ind.	Screen desc.	Parameter
Ea01	Control type	prop. to external signal with limit probe
Ea03	Proportional band	Set: Hysteresis (0-100%) Minimum production (0-100%) Maximum production (0-100%)
Ea06	Limit probe	Set: Set point (0-100 %rH) Differential (0-100%)
Ec01	Main probe type	Select from: 0-1V, 0-10V, 2-10V, 0-20mA, 4-20mA
Ec02	Limit probe type	Select from: 0-1V, 0-10V, 2-10V, 0-20mA, 4-20mA

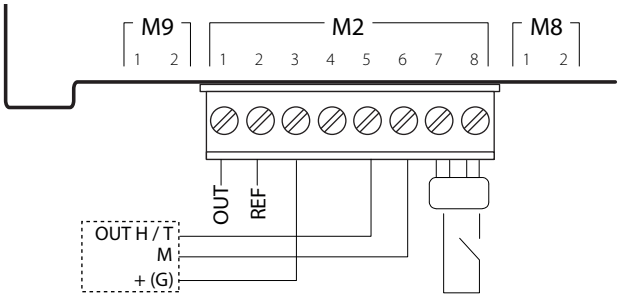

Fig. 4.s

Note: in industrial environments (IEC EN61000-6-2) the signal cables leaving the unit must not exceed 30 m (98') in length: steam production signal cable (terminals M2.1, M2.2), digital remote on/off input (terminals M2.7, M2.8) and shielded cable for RS485 communication.

4.6 Control with humidity probes

The main control board, connected to a room humidity probe, manages steam production based on the humidity measured. A second outlet humidity limit probe can also be connected: with this configuration, typical of air handling units, the main control board continues managing steam production according to the humidity requirement, however production is limited according to the relative humidity measured in the outlet duct.

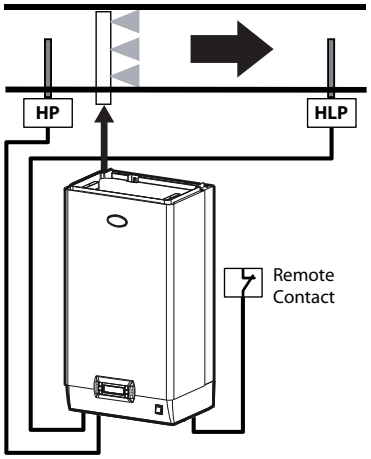

Fig. 4.t

Key:

HP	Humidity control probe (intake/room humidity probe)
HLP	Limit humidity probe (outlet humidity probe)
Remote Contact	Remote contact

CONTROL WITH ONE HUMIDITY PROBE

- short-circuit terminals M2.7 – M2.8 (jumper) to enable production; alternatively connect terminals M2.7 – M2.8 to a remote contact (e.g.: switch, timer,...);
- connect the main active room probe to terminals M2.1, M2.2 (GND) and M2.3 (+12Vdc);

Note: when using Carel 0-10V probe, connect the probe power supply +(G) to terminal "G" on the board rather than terminal M2.3.

- to enable control, set:

Screen ind.	Screen desc.	Parameter
Ea01	Control type	one humidity probe
Ea05	Modulating control	Set: humidity set point (0-100 %rH) differential (2-20%rh) Minimum production (0-100%) Maximum production (0-100%)
Ec01	Main probe type	Select from: 0-1V, 0-10V, 2-10V, 0-20mA, 4-20mA

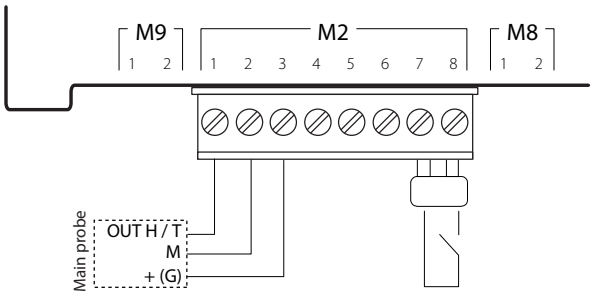

Fig. 4.u

CONTROL WITH ONE HUMIDITY PROBE AND LIMIT PROBE

- short-circuit terminals M2.7 – M2.8 (jumper) to enable production; alternatively connect terminals M2.7 – M2.8 to a remote contact (e.g.: switch, timer,...);
- connect the main active room probe to terminals M2.1, M2.2 (GND) and M2.3 (+12Vdc);
- connect the active limit probe to terminals M2.5, M2.3 (+12Vdc), M2.6 (GND);

Note: when using Carel 0-10V probe, connect the probe power supply +(G) to terminal "G" on the board rather than terminal M2.3.

- to enable control, set:

Screen ind.	Screen desc.	Parameter
Ea01	Control type	humidity with limit probe
Ea05	Modulating control	Set: humidity set point (0-100 %rH) differential (2-20%rh) Minimum production (0-100%) Maximum production (0-100%)
Ea06	Limit probe	Set point (0-100 %rH) Differential (0-100%)
Ec01	Main probe type	Select from: 0-1V, 0-10V, 2-10V, 0-20mA, 4-20mA
Ec02	Limit probe type	Select from: 0-1V, 0-10V, 2-10V, 0-20mA, 4-20mA

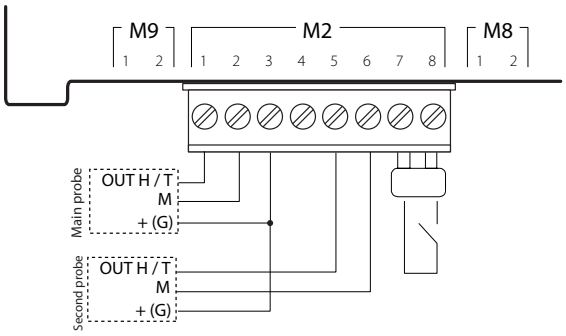

Fig. 4.v

The following probes can be connected:

CAREL probes for rooms	DPWC111000
for air ducts	DPDC110000, DPDC210000
for technical applications	DPPC210000, DPPC210000

Note: non-CAREL active probes can be connected to the controller.

CONTROL WITH TWO HUMIDITY PROBES

- short-circuit terminals M2.7 – M2.8 (jumper) to enable production; alternatively connect terminals M2.7 – M2.8 to a remote contact (e.g.: switch, timer,...);
- connect the main active room probe to terminals M2.1, M2.2 (GND) and M2.3 (+12Vdc);
- connect the second active probe to terminals M2.5, M2.3 (+12Vdc) and M2.6 (GND);

Note: when using Carel 0-10V probe, connect the probe power supply +(G) to terminal "G" on the board rather than terminal M2.3.

- to enable control, set:

Screen ind.	Screen desc.	Parameter
Ea01	Control type	Modulation with two humidity probes
Ea02	Control with 2 probes	Set the weight of the two probes (0-100%)
Ea05	Modulating control	Set: humidity set point (0-100 %rH) differential (2-20%rh) Minimum production (0-100%) Maximum production (0-100%)
Ec01	Main probe type	Select from: 0-1V, 0-10V, 2-10V, 0-20mA, 4-20mA
Ec02	Second probe type	Select from: 0-1V, 0-10V, 2-10V, 0-20mA, 4-20mA

The controller will calculate the weighted average between the two probes. The weight of the two probes can also be set.

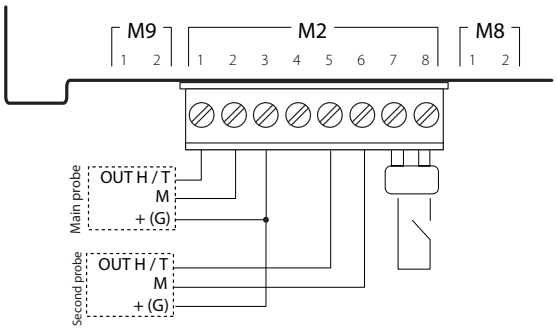

Fig. 4.w

The following probes can be connected:

CAREL probes for rooms	DPWC111000
for air ducts	DPDC110000; DPDC210000
for technical applications	DPPC210000; DPPC210000

Note: non-CAREL active probes can be connected to the controller.

4.7 Control with temperature probes

The controller features independent internal temperature control, and can be connected to a temperature probe TT (Fig. 4.r). It performs complete control based on the temperature measured inside the controlled environment.

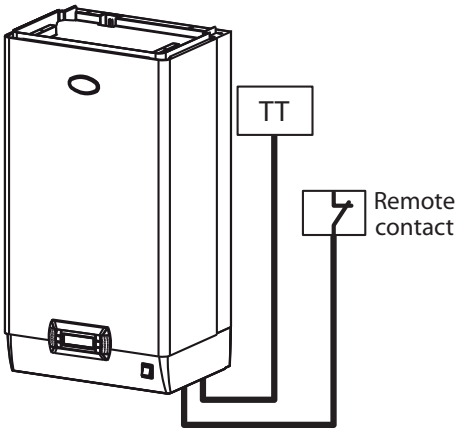

Fig. 4.x

Key:

TT	Active temperature probe
Remote Contact	Remote contact

CONTROL WITH ONE ACTIVE TEMPERATURE PROBE

- short-circuit terminals M2.7 – M2.8 (jumper) to enable production; alternatively connect terminals M2.7 – M2.8 to a remote contact (e.g.: switch, timer,...);
- connect the main active room probe to terminals M2.1, M2.2 (GND) and M2.3 (+12Vdc);

Note: when using Carel 0-10V probe, connect the probe power supply +(G) to terminal "G" on the board rather than terminal M2.3.

- to enable control, set:

Screen ind.	Screen desc.	Parameter
Ea01	Control type	one temperature probe
Ea05	Modulating control	Set: temperature set point (0-100 °C) (32-212°F) differential (2-20°C) (3.6-36°F) Minimum production (0-100%) Maximum production (0-100%)
Ec01	Main probe type	Select from: 0-1V, 0-10V, 2-10V, 0-20mA, 4-20mA

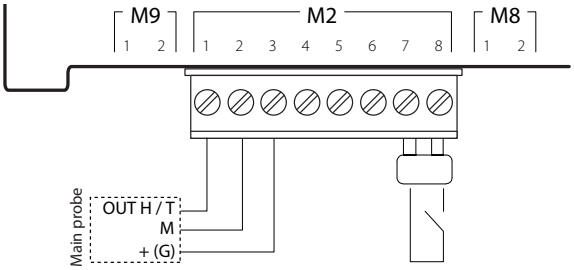

Fig. 4.y

CONTROL WITH ONE TEMPERATURE PROBE AND LIMIT PROBE

- short-circuit terminals M2.7 – M2.8 (jumper) to enable production; alternatively connect terminals M2.7 – M2.8 to a remote contact (e.g.: switch, timer,...);
- connect the main active room probe to terminals M2.1, M2.2 (GND) and M2.3 (+12Vdc);
- connect the active limit probe to terminals M2.5, M2.3 (+12Vdc), M2.6 (GND);

Note: when using Carel 0-10V probe, connect the probe power supply +(G) to terminal "G" on the board rather than terminal M2.3.

- to enable control, set:

Screen ind.	Screen desc.	Parameter
Ea01	Control type	Temperature with limit
Ea05	Modulating control	Set: temperature set point (0-100 °C) (32-212°F) differential (2-20°C) (3.6-36°F) Minimum production (0-100%) Maximum production (0-100%)
Ea06	Limit probe	Set point (0-100 °C/°F) Differential (0-100%)
Ec01	Main probe type	Select from: 0-1V, 0-10V, 2-10V, 0-20mA, 4-20mA
Ec02	Limit probe type	Select from: 0-1V, 0-10V, 2-10V, 0-20mA, 4-20mA

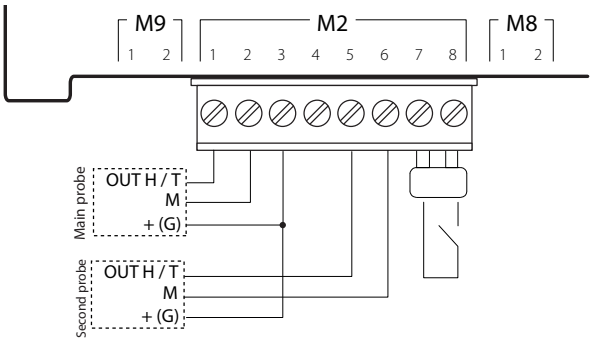

Fig. 4.z

The following probes can be connected:

CAREL probes for rooms	DPWC111000
for air ducts	DPDC110000; DPDC210000
for technical applications	DPPC210000, DPPC210000

Note: non-CAREL active probes can be connected to the controller.

CONTROL WITH TWO ACTIVE TEMPERATURE PROBES

- short-circuit terminals M2.7 – M2.8 (jumper) to enable production; alternatively connect terminals M2.7 – M2.8 to a remote contact (e.g.: switch, timer,...);
- connect the main active room probe to terminals M2.1, M2.2 (GND) and M2.3 (+12Vdc);
- connect the second active probe to terminals M2.5, M2.3 (+12Vdc) and M2.6 (GND);

Note: when using Carel 0-10V probe, connect the probe power supply +(G) to terminal "G" on the board rather than terminal M2.3.

- to enable control, set:

Screen ind.	Screen desc.	Parameter
Ea01	Control type	Temperature (two probes)
Ea02	Control with 2 probes	Set the weight of the two probes (0-100%)
Ea05	Modulating control	Set: temperature set point (0-100 °C) (32-212°F) differential (2-20°C) (3.6-36°F) Minimum production (0-100%) Maximum production (0-100%)
Ec01	Main probe type	Select from: 0-1V, 0-10V, 2-10V, 0-20mA, 4-20mA
Ec02	Second probe type	Select from: 0-1V, 0-10V, 2-10V, 0-20mA, 4-20mA

The controller will calculate the weighted average between the two probes. The weight of the two probes can also be set.

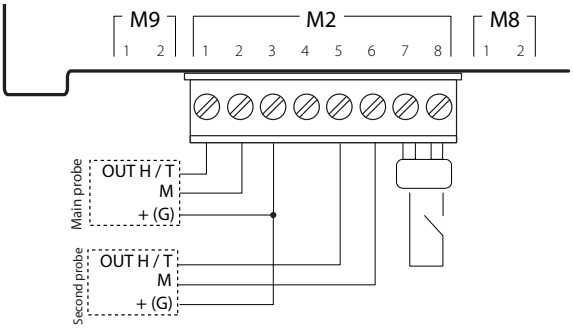

Fig. 4.aa

The following probes can be connected:

CAREL probes for rooms	DPWC111000
for air ducts	DPDC110000; DPDC210000
for technical applications	DPPC210000, DPPC210000

Note:: non-CAREL active probes can be connected to the controller.

CONTROL WITH ONE NTC TEMPERATURE PROBE (passive)

- short-circuit terminals M2.7 – M2.8 (jumper) to enable production; alternatively connect terminals M2.7 – M2.8 to a remote contact (e.g.: switch, timer,...);
- connect the main NTC room probe to terminals M2.1, M2.2;
- to enable control, set:

Screen index	Screen description	parameter
Ea01	Control type	one temperature probe
Ea05	Modulating control	Set: temperature set point (0-100 °C) (32-212°F) differential (2-20°C) (3.6-36°F) Minimum production (0-100%) Maximum production (0-100%)
Ec01	Main probe type	Set probe type: NTC

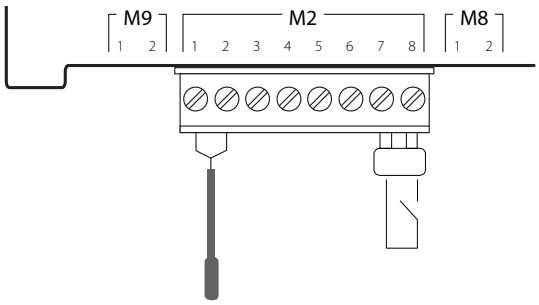

Fig. 4.ab

CONTROL WITH TWO NTC TEMPERATURE PROBES (passive)

- short-circuit terminals M2.7 – M2.8 (jumper) to enable production; alternatively connect terminals M2.7 – M2.8 to a remote contact (e.g.: switch, timer,...);
- connect the main NTC room probe to terminals M2.1, M2.2;
- connect the second NTC probe to terminals M2.5, M2.6;
- to enable control, set:

Screen index	Screen description	parameter
Ea01	Control type	Modulation with two temperature probes
Ea02	Control with 2 probes	Set the weight of the two probes (0-100%)
Ea05	Modulating control	Set: temperature set point (0-100 °C) (32-212°F) differential (2-20°C) (3.6-36°F) Minimum production (0-100%) Maximum production (0-100%)
Ec01	Main probe type	Set probe type: NTC
Ec02	Second probe type	Set probe type: NTC

The controller will calculate the weighted average between the two probes. The weight of the two probes can also be set.

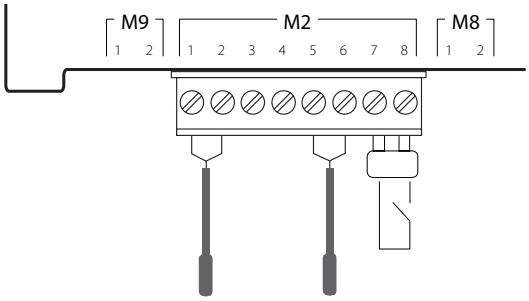

Fig. 4.ac

4.8 Alarm contact

The humidifier controller is fitted with a relay contact for remote signalling of one or more faults or alarms. The alarm contact (250 Vac; max capacity: 2 A resistive - 2 A inductive) is connected to terminals M6.1, M6.2 and M6.3.

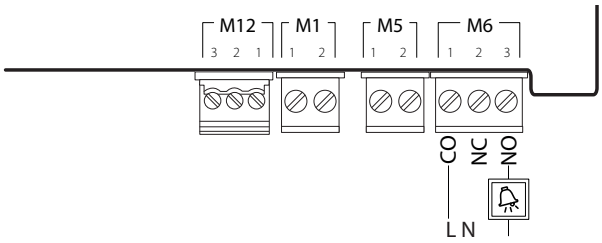

Fig. 4.ad

M6.1	CO - Alarm common
M6.2	NC - NC alarm contact
M6.3	NO - NO alarm contact

4.9 Production request analogue output

The humidifier controller is fitted with an analogue output (0-10 V signal) that reflects the production request.
The production request output (0-10 V max 10 mA) is connected to terminals M8.1, M8.2.

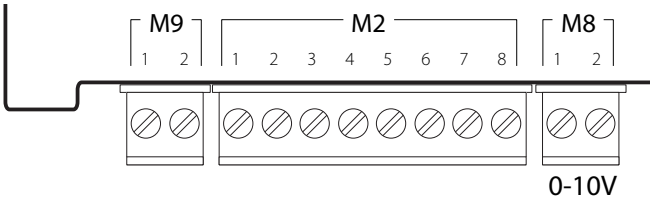

Fig. 4.ae

M8.1	Production request analogue output
M8.2	GND

IMPORTANT WARNINGS: to avoid unbalanced control, the earth of the probes or external controllers must be connected to the unit controller's earth.

4.10 Final checks

The following conditions represent correct electrical connection:

1. mains power to the humidifier corresponds to the voltage shown on the rating plate;
2. the fuses installed are suitable for the line and power voltage;
3. a mains disconnect switch has been installed so as to be able to disconnect power to the humidifier;
4. the humidifier has been correctly earthed;
5. the power cable is fastened to the tear-proof cable clamp;
6. terminals M2.7, M2.8 are jumpered or connected to an enabling contact;
7. if the humidifier is controlled by an external controller, the signal earth is electrically connected to the controller earth.

5. PREPARING FOR OPERATION

5.1 Preliminary checks

Before starting the humidifi er, check that:

- the water and electrical connections are made and the steam distribution system is confi gured according to the instructions contained herein;
- the shut-off tap for water into the humidifi er is open;
- the power fuses are installed and intact;
- terminals M2.7 and M2.8 are connected by jumper or connected to the remote ON/OFF contact, and that the latter is closed;
- the probes or the external control device are correctly connected (and that the earth of these devices is electrically connected to the earth of the main control board);
- the steam outlet pipe is not choked;
- in the event of ducted humidifi cation, the operation of the humidifier is slave to the operation of the air fan (replacing or in series with the remote ON/OFF contact);
- the distributor condensate return pipe is installed and free;
- the drain pipe is correctly connected and free.

Important: before starting the humidifi er, check that it is in perfect condition, that there are no water leaks and that the electrical parts are dry.

6. START-UP AND USER INTERFACE

Once having completed the operations listed in chapter 5. "Preparing for operation", the humidifier can be started.

6.1 Start-up

After having closed the disconnect switch on the humidifier power line, switch the appliance on by moving the switch on the front panel to I, "ON". The activation sequence will start, which includes an initial phase, an autotest phase and finally actual operation. Each phase in the activation sequence is identified by a different display.

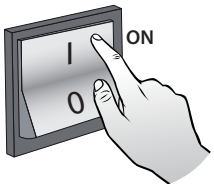

Fig. 6.a

6.2 Activation sequence

1. STARTING THE APPLICATION THE FIRST TIME

The "heaterSteam" humidifier logo is displayed. When starting the first time (commissioning), the menu language needs to be selected:

1. English
2. Italiano
3. Deutsch
4. Francais
5. Espaniol

Press UP/Down to select the number corresponding to the desired language and press ENTER to confirm. This screen is displayed for 60 seconds.

2. FIRST START-UP (WIZARD)

When starting the first time, a wizard is displayed to quickly set the main unit parameters. The wizard comprises nine steps (some of which may not be displayed, if not necessary):

- 1/9 - model (only if the replacement controller is not configured): select and set the parameters relating to the model (size, voltage,…);
- 2/9 - water hardness: auto or user-defined. If choosing "auto", the controller automatically sets the water hardness, based on feedwater conductivity;
- 3/9 - manual water hardness setting. The possible options are:
  1. 0-10°F, maintenance at 3000h (hours)
  2. 10-20°F, maintenance at 1500h (hours)
  3. 20-30°F, maintenance at 1000h (hours)
  4. 30-40°F, maintenance at 800h (hours);
- 4/9 - control type: external On/Off signal, proportional to external signal with limit probe, proportional to external signal, one humidity probe, one temperature probe, one humidity probe and limit probe, one temperature probe and limit probe, two temperature probes (average), two humidity probes (average);
- 5/9 – select the main room probe type: 0-1V (active), 0-10V (active), 2-10V (active), 0-20 mA (active), 4-20 (active), NTC (passive);
- 6/9 – select the limit probe type: 0-1V (active), 0-10V (active), 2-10V (active), 0-20 mA (active), 4-20 (active), NTC (passive);
- 7/9 - set the limits for the active probes.
  Room min (%): set the minimum relative humidity limit rH% for the main probe;
  Room max (%): set the maximum relative humidity limit rH% for the main probe;
  Limit min (%): set the minimum relative humidity limit rH% for the limit probe;
  Limit max (%): set the maximum relative humidity limit rH% for the limit probe;
- 8/9 - set the drain to dilute cycles: auto or user-defined. If choosing "auto", the controller automatically sets the number of evaporation cycles that must occur between two consecutive drain to dilute cycles. This setting is based on the feedwater conductivity read by the conductivity meter, thus reducing the use of water, reducing maintenance and extending cylinder life;
- 9/9 - manual drain to dilute cycle setting. Enter the number of evaporation cycles before forcing a dilution cycle.

At the end of the guided procedure, a message prompts whether to show the wizard again when next starting? Yes/no

3. AUTOTEST PROCEDURE

Indicated on the display by the unit status shown as "AUTOTEST".
Whenever the humidifier is started (switch moved from OFF to ON), an autotest procedure is run by default to check operation of the level sensor and the appliance as a whole.
The autotest procedure involves a water fill cycle to above the high level (green LED), followed by a drain cycle until below the minimum level (red LED). The procedure then refills the unit with water in order to restart production (if required). .

Note: in the event of malfunctions, the contactor is deactivated and the corresponding alarm is shown.

Note: all the screens in the wizard (except for the language selection screen) remain on the display until the user enters the settings.

4. OPERATION

The humidifier starts operating and the standard display is shown. If an alarm is active, the corresponding icon comes on red, see chapter 13 "Alarm table" for the complete list and description.

Note:
Selecting and configuring the model (only for replacement controllers that are not configured): if needing to replace the controller only (heaterSteam process version spare part URH00000P3, heaterSteam titanium version spare part URH00000T3), the first time the controller is powered on, the model will need to be set (capacity and power supply).

6.3 Shutdown

- To avoid stagnation, drain the water from the cylinder by pressing UP and DOWN together for 5 seconds; to stop the drain cycle, press ESC.
- move the switch to 0, "OFF".

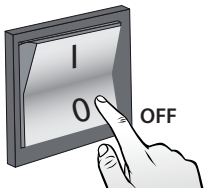

Fig. 6.b

6.4 Graphic terminal

The graphic terminal contains the display and the keypad, with 6 buttons, used to perform all the configuration and programming operations on the controller.

6.5 Keypad

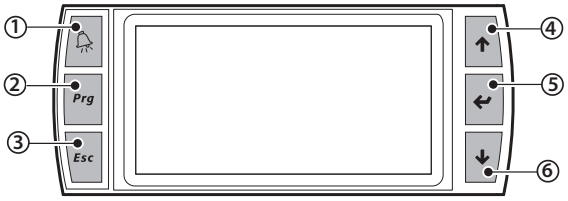

Fig. 6.c

button		function
(1)	alarm	list active alarms and reset any alarms
(2)	PRG	return to "Main" screen
		from "Main" screen access the main menu
(3)	ESC	return to previous screen/display access notifications (only from main menu)
(4)	UP	scroll the screen menu, parameters and parameter values cyclically
		from "Main" screen: access the INFO screens
(5)	ENTER	select and confirm
		from the main menu: access the "SET" screens
(6)	DOWN	scroll the screen menu, parameters and parameter values cyclically
		from the main screen access the INFO screens

6.6 Display

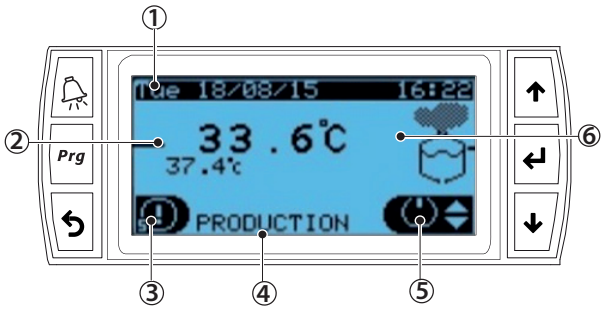

Fig. 6.d

Key to graphic areas on the display

1	Current time/date
2	Probes/Request
3	Notification center
4	Unit status
5	Quick access menu
6	Unit status icon

6.7 Display graphic area 2 – Probes/Request

The "Probes/Request" graphic area displays the production request and the values read by the probes.
The display changes depending on the type of control; the possible displays are listed below:

- control **proportional to external signal and proportional to external signal with limit probe**, the request is displayed; for example:

- **ON/OFF signal:** the request status is displayed, ON or OFF
- **humidity (one probe)** and **temperature control (one probe)**: the value read by the main probe only is displayed; for example:

- **humidity control with limit** and **temperature control with limit**: the values read by both the probes are displayed, the main in the center and the limit at the bottom; for example:

Value read by the main probe
Value read by the limit probe

- **humidity control (two probes)** and **temperature control (two probes)**: the two values read by the probes and their weighted average are displayed; for example:

Weighted average
Value read by the first probe

Value read by the second probe

- **with wireless probes**: as in the previous case, but with the difference that the two average values are displayed at the bottom and the overall weighted average is displayed in the center (main probe).
- **Master/Slave:** the total request for the Master/Slave system is displayed; the existence of the Master/Slave system is also indicated by: "Network":

6.8 Display graphic area 3 - Notification center

The notification center briefly displays the main messages relating to humidifier activity.

To access the notification center, from the main screen press "ESC" ↵. The main screen shows whether any notifications are present, by indicating the number of active notifications. In the example below there are two active notifications.

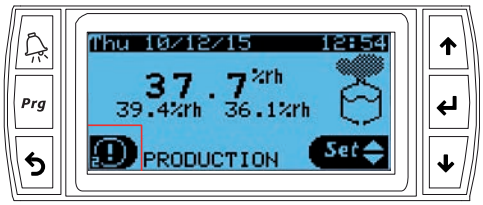

Press "ENTER" ↵ to see the description of each message in the notification center. The list of possible messages displayed by the notification center is shown below:

Notification center message	Description of the message	Type of notification
Maintenance request in xxx hours. Cylinder operating hours: yyy hours	The unit requires routine maintenance	System
Thermal shock will be run in x hours (when the unit next stops)	The unit will run the thermal shock function	System
Thermal shock pending (to be run when the unit next stops)	The thermal shock function is pending (and will be run when production next stops)	System
The unit has performed x drain cycles due to foam	The unit has performed a number of drain cycles after detecting foam	System
Maximum Master/Slave system production is below set point. **Set**: xxxx **Current**: yyyy	The maximum production of the Master/Slave system is below the set point.	System
Thermal shock performed correctly	The thermal shock procedure has been performed correctly	User
The unit has restarted automatically after shutdown. There may have been a blackout?	The unit has restarted automatically after shutdown, perhaps after a blackout	User
Periodical drain performed	The periodical drain cycle has been completed correctly	User
Factory reset	The default parameters have been reset correctly	User

The system notifications cannot be cleared by the user and will be cancelled automatically, while the user notifications can be cleared by pressing ***Prg***.

6.9 Display graphic area 4 - Unit status

Standby:	unit in standby and ready to operate;
Production:	the unit is producing steam;
Alarm:	at least one alarm is active. Display the alarm by pressing ;
Off from BMS:	steam production disabled from supervisor;
Off from time band:	steam production disabled by time band;
Off from Din:	steam production interrupted by opening the "remote ON/OFF" contact;
Off from keypad:	the unit has been switched off from the keypad 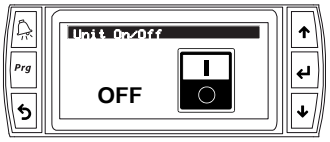
Ready for backup:	the unit is ready and waiting to start operation if there is a malfunction on the main unit.
Manual mode:	test mode at first start-up and to check operation (for example: drain pump, fill valve…)
Warning	warning notifications
Preheating:	the unit is preheating the water in the cylinder;
Heating when starting:	the unit, during start-up, is heating the water to reach the production temperature;
Autotest:	the unit is running the autotest;
Thermal shock:	the unit is running the thermal shock procedure;
Drain:	water drain due to inactivity or periodical drain, the drain pump is active.

6.10 Display graphic area 5 - Quick access

The quick access menu is used to rapidly access unit information and settings.

Procedure:

1. Press ESC one or more times to return to the standard display (main screen);
2. Press UP/DOWN to display the icon corresponding to the required quick access menu;

ICON			
	Info	On/Off	Set point

3. Press Enter to enter the menu, UP/DOWN to navigate, ESC to exit.

6.10.8 Quick access – Info

Comprises read-only screens displaying the main unit information:

- Info (screen index Qc01)
  Unit status
  Current request
  Current production
  Feedwater conductivity
  Water temperature (measured by NTC probe outside of the cylinder)
- Operating hour counters (screen index Qc02)
  Cylinder operating hours
  Unit operating hours
- Blackout (screen index Qc03)
  Last pCO controller shutdown (time/date)
  Shutdown duration (days, hours, minutes)
- Unit information (screen index Qc04)
  Unit model
  Maximum capacity, maximum power consumption, power supply, maximum current, number of electrical phases.
- Software information (screen index Qc05)
  Code
  Version
  OS

6.10.9 Quick access – Set

Comprises read/write screens to quickly program the unit set point:

- Main set point (screen index Qb01)
  Set point setting
  Control differential
  Maximum production
- Limit probe or second probe set point (screen index Qb02)
  Set point setting
  Differential

6.10.10 Quick access – ON/OFF

Unit On/Off from the keypad. Press UP/DOWN to move from one screen to the next and switch the unit on and off. This is useful for quickly disabling the Master controller in the event of maintenance/testing. The screen index is Qa01.

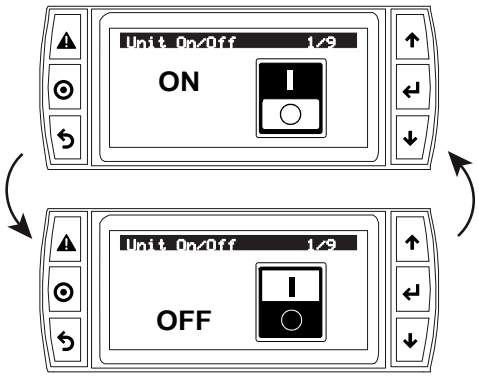

Fig. 6.e

6.11 Display graphic area 6 - Unit status icons

Graph display of unit status by icons. The status may be:

	Fill (fill valve active)
	Drain (drain pump active)
	Steam production
	Minimum water level in the cylinder (yellow and red LEDs on; heaters immersed)
	Water level above maximum in the cylinder (green LED on; heaters immersed)

Tab. 6.c

6.12 Main menu

The parameters can be modified using the keypad: press **Prg** to access and UP/DOWN to scroll the main menu.

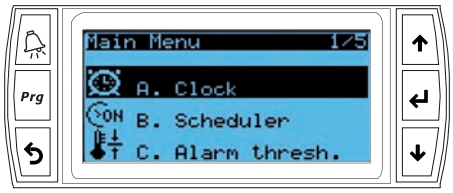

Fig. 6.f

Main menu icons:

A.		Clock
B.		Scheduler
C.		Alarm thresholds
D.		Inputs/outputs
E.		Settings

Tab. 6.d

A.	Clock: current time/date and time zone setting.	
B.	Scheduler: hourly and daily time band setting.	
C.	Alarm thresholds: minimum and maximum threshold setting for the main room probe and the maximum threshold for the limit probe.	
D.	Inputs/outputs:	
	Display analogue probe readings	main probe limit probe preheating probe (NTC) conductivity
	Digital input status	remote on/off motor protector level sensor: low level sensor: high foam sensor
	Analogue outputs	current production
	Digital output status	unit on/off contactor drain pump fill valve SSR/fan
	Foam sensor	read value foam threshold?
E.	Settings: once having entered the Settings menu, login is required. Use password 0044 to enter the Service settings. Use password 0077 to enter the Installer settings.	

Settings menu icons:

Index	Icon	Menu	Menu type	Controller type
A.		Control	Installer Service	heaterSteam process heaterSteam titanium
B.		Functions	Installer Service	heaterSteam process heaterSteam titanium
C.		Configuration	Installer	heaterSteam process heaterSteam titanium
D.		Network	Installer	heaterSteam process heaterSteam titanium
E.		Backup	Installer	heaterSteam titanium
F.		Manual mode	Installer Service	heaterSteam process heaterSteam titanium
G.		Initialisation	Installer Service	heaterSteam process heaterSteam titanium
H.		Supervision	Installer	heaterSteam process heaterSteam titanium
I.		Logout	Installer Service	heaterSteam process heaterSteam titanium

6.13 Complete programming menu tree

Below is the complete tree of the configuration menu. Remember that the screen index at the top right on the display corresponds to the sequence of indices in each menu to reach the specific page (see paragraph 4.5 for further details"). There are two types of menu: Installer and Service.

Menu			Screen	Menu description	Menu type	Controller type
A. Clock			A01	Set the time, date and time zone	Installer Service	heaterSteam process heaterSteam titanium
B. Scheduler		Scheduler	B01	Enable the scheduler (time bands)	Installer Service	heaterSteam process heaterSteam titanium
			B02	*(visible if time bands are enabled)* Set the time bands: day, ON time, OFF time	Installer Service	heaterSteam process heaterSteam titanium
C. Alarm thresholds			C01	Set the alarm thresholds Low humidity/temperature alarm threshold High humidity/temperature alarm threshold Limit humidity/temperature alarm threshold	Installer Service	heaterSteam process heaterSteam titanium
D. Inputs/outputs		Analogue inputs	D01	Read values from main probe, limit probe, cylinder water temperature, feedwater conductivity	Installer Service	heaterSteam process heaterSteam titanium
		Digital inputs	D02	Read status of remote On/Off, motor protector, level sensor float position, foam sensor	Installer Service	heaterSteam process heaterSteam titanium
		Analogue outputs	D03	Read current production	Installer Service	heaterSteam process heaterSteam titanium
		Digital outputs	D04	Read status of unit On/Off, contactor, drain pump, fill valve, SSR/fan	Installer Service	heaterSteam process heaterSteam titanium
		In/Out Wireless probe 1	D05	Read temperature and/or humidity values Read value of level signal and battery level on probe 1	Installer Service	heaterSteam process heaterSteam titanium
		In/Out Wireless probe 2	D06	Read temperature and/or humidity values Read value of level signal and battery level on probe 2	Installer Service	heaterSteam process heaterSteam titanium
		In/Out Wireless probe 3	D07	Read temperature and/or humidity values Read value of level signal and battery level on probe 3	Installer Service	heaterSteam process heaterSteam titanium
		In/Out Wireless probe 4	D08	Read temperature and/or humidity values Read value of level signal and battery level on probe 4	Installer Service	heaterSteam process heaterSteam titanium
E. Settings (password)	a. Control	Control type	Ea01	Set the type of control	Installer	heaterSteam process heaterSteam titanium
		Weights	Ea02	Set the weight of the two probes	Installer	heaterSteam process heaterSteam titanium
		Control proportional to external signal	Ea03	Sett the hysteresis, minimum production and maximum production	Installer	heaterSteam process heaterSteam titanium
		External ON/OFF	Ea04	Set the maximum production with external ON/OFF control	Installer	heaterSteam process heaterSteam titanium
		Modulating control	Ea05	Set the set point, differential, min production, max production	Installer	heaterSteam process heaterSteam titanium
		Limit probe	Ea06	Set the set point and differential	Installer	heaterSteam process heaterSteam titanium
		Cylinder op. hours	Ea07	Display cylinder operating hours Reset hour counter and set maintenance pre-alert threshold	Service	heaterSteam process heaterSteam titanium
	b. Functions	Enable preheat	Eb02	Enable preheating Set the water temperature to maintain Set the Offset	Installer	heaterSteam process heaterSteam titanium
		Partial fill	Eb03	Enable partial fill Set partial fill time	Installer	heaterSteam process heaterSteam titanium
		Drain due to inactivity	Eb04	Enable drain due to inactivity Set the inactivity threshold	Installer	heaterSteam process heaterSteam titanium
		Periodical drain	Eb05	Enable periodical drain cycles Set the threshold for the periodical drain cycles	Installer	heaterSteam process heaterSteam titanium
		Thermal shock	Eb06	Enable thermal shock Set the thermal shock threshold	Installer	heaterSteam process heaterSteam titanium
		Digital output M5.2	Eb07	Enable the output relay for unit status (production) or maintenance pre-alert	Installer	heaterSteam process heaterSteam titanium
		Blower units	Eb08	Set on and off delay for blower units	Installer	heaterSteam process heaterSteam titanium
		Export logs	Eb09	Save the log of main variables to USB pen drive	Service Installer	heaterSteam process heaterSteam titanium
		Export alarms	Eb10	Save alarm log to USB pen drive	Service Installer	heaterSteam process heaterSteam titanium
	c. Configuration	Main probe	Ec01	Set the main probe: 0 to 1 V, 0 to 10 V, 2 to 10 V, 0 to 20 mA, 4 to 20 mA, NTC	Installer	heaterSteam process heaterSteam titanium
		Limit probe	Ec02	Set the limit probe: 0 to 1 V, 0 to 10 V, 2 to 10 V, 0 to 20 mA, 4 to 20 mA, NTC	Installer	heaterSteam process heaterSteam titanium
		Wireless probes	Ec03	Set the wireless probes (main/limit)	Installer	heaterSteam titanium
		Wireless probe 1	Ec04	Set the weight of probe 1 Set the communication times	Installer	heaterSteam titanium
		Wireless probe 2	Ec05	Set the weight of probe 2 Set the communication times	Installer	heaterSteam titanium
		Wireless probe 3	Ec06	Set the weight of probe 3 Set the communication times	Installer	heaterSteam titanium
		Wireless probe 4	Ec07	Set the weight of probe 4 Set the communication times	Installer	heaterSteam titanium
		Number of evaporation cycles before drain	Ec11	Set the number of evaporation cycles between two drain cycles	Installer	heaterSteam process heaterSteam titanium
		Variation in fill and drain time	Ec12	Set the fill and drain time in relation to manufacturer default	Installer	heaterSteam process heaterSteam titanium
		Water hardness	Ec13	Hardness value	Installer	heaterSteam process heaterSteam titanium
		No feedwater time	Ec14	Set time to check for no water	Installer	heaterSteam process heaterSteam titanium
		High conductivity	Ec15	Enable the high conductivity alarm Set the alarm delay	Installer	heaterSteam process heaterSteam titanium
		High conductivity	Ec16	Set conductivity thresholds: warning, alarm and hysteresis	Installer	heaterSteam process heaterSteam titanium
		Remote ON input logic	Ec22	Remote ON/OFF operating logic	Installer	heaterSteam process heaterSteam titanium

Menu			Screen	Menu description	Menu type	Controller type
E. Settings (password)	c. Configuration	SSR PWM period	Ec23	Duration of SSR modulation period	Installer	heaterSteam process heaterSteam titanium
	d. Master/Slave	Master/Slave	Ed01	Initial Master/Slave system configuration Press "PRG" to configure the Master/Slave network	Installer	heaterSteam titanium
		Unit 1 Unit 2 . . . Unit 20	Ed02	Add unit to the Master/Slave system	Installer	heaterSteam titanium
		Maximum production of Master/Slave system. Unit rotation.	Ed03	Set maximum production of the Master/Slave system Set the unit rotation logic	Installer	heaterSteam titanium
		Advanced preheating Rotation time.	Ed04	Enable the advanced preheating function for Master/Slave systems Set the rotation time between one unit and the next	Installer	heaterSteam titanium
		Offline timeout.	Ed05	Set the unit offline time in the Master/Slave system	Installer	heaterSteam titanium
		Disconnect unit from Master/Slave system	Ed06	Disable/disconnect the current unit from the Master/Slave system	Installer	heaterSteam titanium
		Master/Slave production	Ed07	Display the request (%) and the production (kg/h / lbs/h) of the Master/Slave system Press "PRG" to configure the Master/Slave network	Installer	heaterSteam titanium
		Display Master/Slave system	Ed08	Unit status with corresponding % of production Press "PRG" to configure the Master/Slave network	Installer	heaterSteam titanium
		Display info on individual unit. Unit 1 Unit 2 . .. Unit 20	Ed09	Display unit operating hours, current production and any alarms To move between the various units use the UP and DOWN arrows	Installer	heaterSteam titanium
		Unit switched off for maintenance.	Ed10	Unit switched off for maintenance	Installer	heaterSteam titanium
	e. Backup	Enable backup	Ee01	Enable automatic unit backup in the event of shutdown, using a second independent unit	Installer	heaterSteam titanium
		Priority when starting	Ee02	Define the priority of the units when in backup mode	Installer	heaterSteam titanium
	f. Manual mode	Type of manual mode	Ef01	Enable manual mode: Disabled, manual management of outputs and manual request	Service Installer	heaterSteam process heaterSteam titanium
		Manual management of outputs	Ef02	Test the outputs: fill valve, drain pump, contactor, SSR status, SSR ON time, SSR OFF time	Service Installer	heaterSteam process heaterSteam titanium
		Manual management of request	Ef03	Manually set the production request	Service Installer	heaterSteam process heaterSteam titanium
	g. Initialisation	Wizard	Eg01	Start the wizard for initial unit configuration Set whether to display the wizard when next restarting	Service Installer	heaterSteam process heaterSteam titanium
		Language	Eg02	Set the language	Service Installer	heaterSteam process heaterSteam titanium
		Unit of measure and language when starting	Eg03	Set unit of measure (International or Imperial). Select the language when starting	Installer	heaterSteam process heaterSteam titanium
		Change password	Eg04	Change the password (Service, Installer).	Service Installer	heaterSteam process heaterSteam titanium
		Inst. default	Eg06	Unit factory reset. Important: resetting the model will cancel all of the control settings and load the default values	Service Installer	heaterSteam process heaterSteam titanium
		Software update	Eg07	Update the unit software from USB pen drive	Service Installer	heaterSteam process heaterSteam titanium
		Export parameters	Eg08	Export the configuration parameters from the unit to USB pen drive	Service Installer	heaterSteam process heaterSteam titanium
		Import parameters	Eg09	Import the configuration parameters from USB pen drive to the unit	Service Installer	heaterSteam process heaterSteam titanium
	h. Supervision	Unit supervision address on BMS port	Eh01	Set the unit address for supervision. Enable the supervisor type and protocol	Installer	heaterSteam process heaterSteam titanium
		BMS port communication settings	Eh02	Set the communication parameters for supervision via BMS: Baud rate, stop bits and parity	Installer	heaterSteam process heaterSteam titanium
		BACnet MS/TP configuration	Eh03	Set the address, maximum number of masters and maximum number of frames	Installer	heaterSteam process heaterSteam titanium
		Ethernet network settings	Eh04	Set DHCP, IP address, mask, gateway, DNS for the Ethernet network. Important: these values must be provided by the local network administrator	Installer	heaterSteam process heaterSteam titanium
		Supervision settings on Ethernet port	Eh05	Select the protocol on the Ethernet port: ModBus or BACnet	Installer	heaterSteam process heaterSteam titanium
	i. Logout	Logout	Ei01	Information on the type of login performed. Possibility to logout	Service Installer	heaterSteam process heaterSteam titanium

Tab. 6.e

6.14 Alarms

Any active alarms will be shown on the corresponding screen with direct access from the display.

When an alarm occurs, the corresponding alarm button starts flashing.

In these conditions, pressing the alarm button once displays the type of alarm. In the event of potentially dangerous alarms, the humidifier automatically stops steam production. For certain alarm events, as well as the alarm signal, the alarm relay is activated (see Chap. 13 "Alarm table").
When the cause of the alarm is no longer present:

- the humidifier and the alarm relay are reset automatically or manually;
- the message shown on the display can only be cleared manually (see Chap. 13 "Alarm table");

Even if no longer active, the alarm status continues to be indicated until "clear display" button is pressed.
Alarms that are still active cannot be reset. If there is more than one alarm, the display shows all the alarms in sequence.
From the alarm screen, the alarm log can be displayed by pressing "Enter" ↵. For the complete table of alarms, see chapter 13. Alarm table.

7. USER MENU AND UNIT CONFIGURATION

The following paragraphs describe the heaterSteam programming menu. Remember that the screen index at the top right on the display corresponds to the sequence of indices in each menu to reach the specific page (see paragraph 4.4 for further details).

7.1 Main menu

7.1.1 Menu A. Clock (Main menu)

The Clock menu is used to set the time, date and time zone. Setting the time zone will automatically update standard/daylight saving time.

Screen index	Description	Parameter
A01	Clock	Set the date, time and time zone.

7.1.2 Menu B. Scheduler (Main menu)

The Scheduler menu is used to enable the time bands.

Index	Description	Parameter
B01	Scheduler	Enable time bands Default: time bands disabled

To configure the humidifier operating time bands for a specific day (24h), use screen B02 (visible only if the scheduler is enabled). A time band can be set with production disabled (OFF), enabled (ON), or enabled with s specific set point (ON+SET). Setting the ON time band, the unit uses the main set point configured on screen Qb01. If setting ON+SET, the specific set point for the time band can be configured.

Index	Description	Parameter
B02	Scheduler	Define daily and weekly time bands

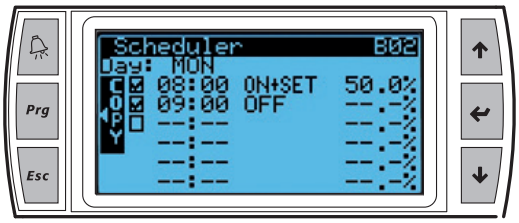

Fig. 7.a

In the example shown here in Fig.7.a, the time band from 8.00 to 9.00 is enabled for production with a specific set point of 50%rH. After 9.00, humidifier production will not be enabled.

unit of measure indication:	symbol displayed	unit of measure
	%	%rH
	°C	degrees Celsius
	°F	degrees Fahrenheit

Once the time bands have been defined for one day, press ***Prg*** to copy the currently displayed bands (daily) to the next day. When the time bands have been set, the display shows the symbol.

Note: if control is by external signal, the humidifier can only be switched ON or OFF.

7.1.3 Alarm thresholds (Main menu)

To check that the relative humidity measured by the probe transducer is within certain predefined values, two alarm thresholds can be configured:

- high relative humidity alarm threshold, for both the main probe and limit probe;
- low relative humidity alarm threshold for the main probe.

On exceeding these thresholds, an alarm is activated and the corresponding relay contact on the main control board is closed. Temperature thresholds can also be set.

Index	Description	Parameter
C01	Alarm thresholds	Set alarm thresholds Low humidity/temperature alarm threshold High humidity/temperature alarm threshold Limit humidity/temperature alarm threshold
		Defaults: low humidity/temperature: 0% rH / 0°C(32°F); high humidity/temperature: 100% rH / 100 °C(°F); humidity/temperature limit: 100% rH / 100 °C(°F);
		Possible settings: 0-100

7.1.4 Inputs/outputs (Main menu)

The Inputs/outputs menu is used to read the status of the inputs and outputs and check unit operation and status.

Index	Description	Parameter
D01	Analogue inputs	Read values from main probe, limit probe, cylinder water temperature, feedwater conductivity
D02	Digital inputs	Read status of remote On/Off, motor protector, level sensor float position, foam sensor
D03	Analogue outputs	Read current production
D04	Digital outputs	Read status of unit On/Off, contactor, drain pump, fill valve, SSR/fan
D05	In/Out Wireless probe 1	Read temperature and/or humidity values Read value of level signal and battery level on probe 1
D06	In/Out Wireless probe 2	Read temperature and/or humidity values Read value of level signal and battery level on probe 2
D07	In/Out Wireless probe 3	Read temperature and/or humidity values Read value of level signal and battery level on probe 3
D08	In/Out Wireless probe 4	Read temperature and/or humidity values Read value of level signal and battery level on probe 4

Description of level sensor float position:

Float	Low level sensor	High level sensor	LED indication
High	ON	ON	green
Middle	ON	OFF	yellow
Low	OFF	OFF	red

7.2 Menu E. Settings - a. Control

Login is required to access the settings menus:

- service menu: password 0044;
- installer menu: password 0077.

7.2.1 Control type (Installer menu)

To set the type of control, use the following screen:

Index	Description	Parameter
Ea01	Control type	Set the type of control
		Default: humidity (one probe)
		Possible settings: proportional to external signal, proportional to external signal with limit probe, On/Off signal, humidity (one probe), temperature (one probe), humidity with limit, temperature with limit, humidity (two probes), temperature (two probes)

The possible settings are:

- **proportional to external signal:** proportional control with signal from an external controller;
- **proportional to external signal with limit probe:** proportional control with signal from an external controller plus limit probe;
- **On/Off signal:** humidity control with humidistat;
- **humidity (one probe):** humidity control with main probe;
- **temperature (one probe): temperature control with main probe**;
- **humidity with limit:** humidity control with main probe and limit probe;
- **temperature with limit:** temperature control with main probe and limit probe;
- **humidity (two probes):** humidity control with two probes, the controller calculates the weighted average of the two values read;
- **temperature (two probes):** temperature control with two probes, the controller calculates the weighted average of the two values read.

For "humidity (one probe)" or "temperature (one probe)" control, one single main probe can be connected and configured, either wired or wireless.

For "humidity with limit" or "temperature with limit" control, a wired probe can be connected as the main probe and a wired probe as the limit. If using wireless probes (maximum of four), two groups of probes can be defined: the group of main probes and the group of limit probes. In this case, the average will be calculated between the main probes, depending on the defined weight, and the limit probes will also have their own average, again depending on the defined weight.

For "humidity (two probes)" or "temperature (two probes)" control, only a group of main probes can be defined. Wired probes can be connected to the main probe input (M2.1) and the limit probe input (M2.5), which will be used as a second probe, with the average calculated. If using wireless probes (maximum of four), only a group of main probes can be defined, with the average calculated, depending on the defined weight.

For the connections of the signals and/or probes, see chap. 4.

7.2.2 Weighted average of the probes (Installer menu)

If using two temperature probes or two humidity probes, the humidifier controller will calculate the weighted average of the probe readings. In this way, two probes can be used, for example humidity probes, at opposite ends of the room, calculating the average.

Index	Description	Parameter
Ea02	Weight of the probes	Set the weight of the probes
		Default: 100
		Possible settings: 0-100
		Step: 1

The weight of each probe should be expressed with a value from 0 to 100.

The weighted average is calculated as follows:

$$\text{Weighted average} = \frac{((S1 \times p1)+(S2 \times p2))}{(p1+p2)}$$

where "Sx" is the probe reading, and "px" the relative weight.

To calculate the arithmetic average, equal weights should be set (for example: p1 = p2 = 100).

If using wireless probes, the weights of each device can also be defined; in this case a maximum of four wireless probes can be connected, and consequently the formula shown previously for calculating the weighted average is extended to four devices.

7.2.3 Proportional control configuration

If using control proportional to external signal or control proportional to external signal with limit probe, the hysteresis, minimum and maximum production need to be set.

Index	Description	Parameter
Ea03	Control proportional to external signal	Set the hysteresis, min production and max production
		Defaults: Hysteresis = 2% Minimum production = 4% Maximum production = 100%
		Possible settings: Hysteresis = 0-100% Minimum production = 0-10% Maximum production = 0-100%

7.2.4 Control from external ON/OFF signal configuration

If using control with On/Off signal, the maximum production needs to be set.

Index	Description	Parameter
Ea04	External ON/OFF	Set maximum production with external ON/OFF control
		Default: 100%
		Possible settings: 0-100%

7.2.5 Modulation configuration (Installer menu)

If using modulating control, the related parameters need to be set:

Index	Description	Parameter
Ea05	Mod. control	Set point, differential, min production, max production
		Defaults: Set point = 50%rH (42°C) (107.6°F) Differential = 5%rH (5°C) (9°F) Minimum production = 4% Maximum production = 100%
		Possible settings: 0-100

7.2.6 Integral function in probe control

If using a probe that is connected directly to the humidifier (control: humidity probe), the Integral (I) control function can now be selected.
This means the humidity level over time can be considered, bringing the value to the set point even when the proportional action (P) alone is null.
To activate the Integral function, set humidity control (single probe) on screen [Ea01]; also adjust the proportional band on screen [Ea05] (for example, by setting it to a value of 50%). The proportional band has to be at least 10% or higher, so that screen Ea05a will be visible.
On screen [Ea05a], two parameters can be set, "integral time" and "neutral zone".

Index	Description	Parameter
Ea05a	Integral time	Integral time setting
		Default: 120 sec
		Minimum: 0 sec (integral function disabled)
		Maximum: 300 sec
	Neutral zone	Integral neutral zone setting, inside which gain remains constant
		Default: 2.5%
		Minimum: 0%
		Maximum: 20%

7.2.7 Limit probe configuration (Installer menu)

A second probe can be connected as a limit probe at the outlet. This probe has the purpose of preventing the relative humidity downstream of the steam distributor from exceeding a set value, configured by the user. As this probe has a modulating action, the differential can also be set. The limit probe, within its range of activation, has priority over the main probe (as the limit probe set point is higher than the main probe set point).

Index	Description	Parameter
E306	Limit probe	Limit probe set point and differential
		Defaults: Set point = 100%rH Differential = 5%
		Possible settings: 0-100

7.2.8 Cylinder operating hours (Service menu)

The "Cylinder op. hours" screen displays the effective number of cylinder working hours.

Index	Description	Parameter
E307	Cylinder op. hours	Display cylinder operating hours, reset hour counter and set maintenance pre-alert threshold
		Default: Pre-alert = 48 hours
		Possible settings: 0-999

If the cylinder needs to be replaced, the hour counter must be reset using the "Reset" parameter; the hour counter will then start again from zero.

The "Pre-alert" item sets the maintenance pre-alert, which is activated "x" hours before the maintenance alarm, and where "x" is the value set for the "Pre-alert" parameter. This allows time to plan the maintenance operation. The "maintenance alarm" time is the number of cylinder operating hours before it needs to be cleaned. During the start-up wizard, the feedwater hardness is entered, and the "maintenance alarm" depends on this value, as shown in the table below:

Water hardness	Maintenance alarm
0-10°f	STOP for cleaning/maintenance 3000 hours
10-20°f	STOP for cleaning/maintenance 1500 hours
20-30°f	STOP for cleaning/maintenance 1000 hours
30-40°f	STOP for cleaning/maintenance 800 hours

If during the wizard the value is set to "automatic", rather than entering the hardness value, the maintenance alarm is automatically associated to the feedwater conductivity read by the conductivity meter. The following table shows the dependency of the maintenance alarm on water conductivity:

Water conductivity	Maintenance alarm
1 - 50 µS/cm	Warning at 3000 hours without STOP for cleaning maintenance (it is assumed that the water comes from a reverse osmosis system)
50 - 100 µS/cm	STOP for cleaning/maintenance 3000 hours
> 100 µS	STOP for cleaning/maintenance 1500 hours

The conductivity is read periodically, and the maintenance alarm times is thus updated as a consequence.

Therefore, for example, if the water hardness is set to 15°f, the "maintenance alarm" time will be 1500 effective cylinder operating hours; if the "maintenance pre-alert" time is set to 48 hours (default), the maintenance pre-alert will be signalled after 1452 hours.

7.2.9 Unit operating hours (Service menu)

To display information on unit operating hours, access the "Unit operating hours" menu.

Index	Description	Parameter
E308	Unit operating hours	Display unit operating hours

7.3 Menu E. Settings - b. Functions

7.3.1 Preheat cylinder water (Installer menu)

To ensure production starts quickly, the preheat function can be enabled. In this way, even when there is no steam request, the water temperature in the cylinder is kept at a value specified by the user. When production is next needed, the water is thus warmer than ambient temperature and consequently production will start faster.

Index	Description	Parameter
Eb02	Preheating	Enable preheat Set the water temperature to maintain Set water temperature offset
		Defaults: Preheat disabled Water temp. set point in the cylinder = 80°C (176°F) Offset = 3%rH (3°C / 5.4 °F)
		Set point range: 50-80°C (122-194°F) Offset range: 2-20%rH (0-20°C / 32-68°F)

The water temperature in the cylinder is read by the passive NTC temperature probe in contact with the cylinder. The operating principle of the preheat function is described in the following graphs, the first for control with probes, the second for control by external signal.

Preheat with autonomous modulating control with probes

The preheating function, if active, overlaps the control diagram and modulates the power delivered to the heaters in relation to the water temperature and the preheating set point. The operating principle of the preheat function is described in the following graph:

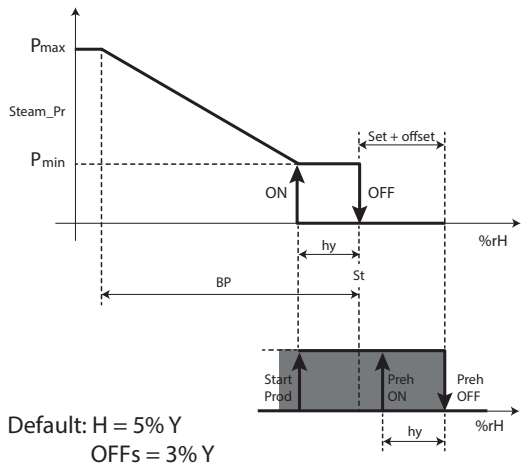

Fig. 7.b

Key

Steam_pr	Steam production	%rH	Humidity measurement
P_{max}	Max production	hy	Activation hysteresis
P_{min}	Min production	BP	Proportional band
St	Set point		

Preheat with control by external signal

The preheating function, if active, shifts the control diagram by a value equal to the "offset". The preheat function modulates the power delivered to the heaters in relation to the water temperature and the preheating set point.

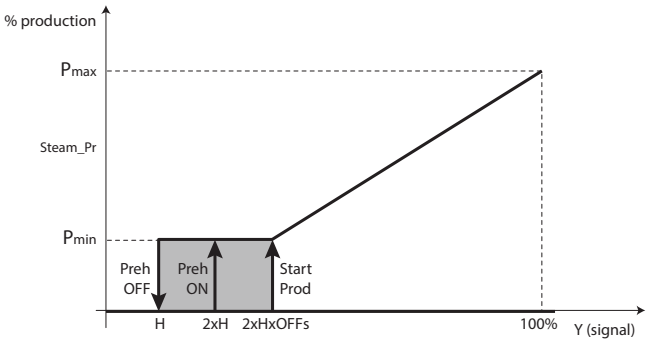

Default: H = 5% Y
OFFs = 3% Y

Fig. 7.c

Key

Steam_pr	Steam production	y	External signal
P_{max}	Max production	hy	Activation hysteresis
P_{min}	Min production		

7.3.2 Fill cycles in PWM mode after drain to dilute cycles and high level/foam (Installer menu)

After a drain to dilute cycle or high level/foam, the fill valve is opened to replenish water up to the maximum level of the float. The addition of fresh water affects steam production, as it decreases the average water temperature inside the cylinder: to reduce the negative impact of fresh water on steam production, the user can activate PWM mode for the fill cycles after drain to dilute cycles and high level/foam.
PWM mode for fill cycles works as follows:

1. the mass of fresh water needed to replenish the water level is divided into smaller amounts of fresh water;
2. by keeping the partial fill cycles as far apart as possible, each small amount of fresh water has more time to heat up before more fresh water is filled, thus reducing the negative impact of the fresh water on steam production.

The duration of each fill cycle can be defined in seconds:

Index	Description	Parameter
Eb03	Partial fill	Enable partial fill. Set the partial fill cycle time.
		Defaults: partial fill: enabled fill time: 5 seconds
		Possible settings 1-199 seconds

7.3.3 Total drain due to inactivity (Installer menu)

For reasons of hygiene, it is recommended to empty the cylinder so as to prevent water from stagnating inside when there is no humidification request for an extended period. The user can set the automatic total drain due to inactivity time in hours:

Index	Description	Parameter
Eb04	Drain due to inactivity	Enable drain due to inactivity; set the hours of inactivity without production request that must expire before draining
		Defaults: drain due to inactivity: enabled; hour threshold: 72 hours
		Possible settings: 1-999 hours
		Remarks: heaterSteam must remain on in order to empty the cylinder. The display shows "DRAIN TO DILUTE" during the drain due to inactivity cycle.

Automatic total drain due to inactivity cycle is enabled by default and the maximum inactivity time is three days (72 hours): the cylinder will be automatically emptied when heaterSteam remains on for at least three days without humidification request.

7.3.4 Periodical drain (Installer menu)

If the feedwater is turbid or has a high mineral content, the cylinder can be periodically drained in order to clean and dilute the water as much as possible. For this operation to be effective, it is recommended to carry it out at least once every two-three days. The user can set the automatic periodical total drain cycle as follows:

Index	Description	Parameter
Eb05	Periodical drain	Enable periodical drain; Set the time between one periodical drain cycle and the next (in hours);
		Defaults: periodical drain: disabled; hour threshold: 10 hours
		Possible settings: 0-999 hours
		Remarks: heaterSteam must remain on in order to empty the cylinder. The display shows "PERIODICAL DRAIN" during the periodical drain cycle.

Periodical drain is disabled by default. The periodical drain hour counter considers the effective production time.

7.3.5 Thermal shock to assist detachment of scale (Installer menu)

Considering the natural trend of scale to build up on the inside surfaces of the cylinder, the materials used are all as smooth as possible. To limit scale build up even more, especially on the heaters, the thermal shock function has been implemented. This function completely empties the cylinder when production stops (and consequently when the water is still boiling). At the end of the drain cycle, water is refilled until reaching the top level. The thermal shock function is set to be activated a certain number of hours of effective production time between two consecutive cycles. On reaching the time threshold, the thermal shock function will be activated the next time production stops, without limits in terms of waiting time.

Note: in the event of non-stop operation 24 hours a day, the thermal shock function will never be activated and will remain constantly pending.

Index	Description	Parameter
Eb05	Thermal shock	Enable thermal shock; Set the time between one thermal shock cycle and the next (in hours);
		Defaults: thermal shock: disabled; interval: 250 hours
		Possible settings: 0-1000 hours
		Remarks: the notification center will signal when thermal shock is pending if the time threshold has been exceeded by production is still in progress. During the function, the display will show "Thermal shock" in the unit status graphic area. A notification message will be shown when there are six hours of production left until thermal shock is activated; the pending thermal shock can be cancelled on this screen.

7.3.6 Unit status signal or maintenance pre-alert (Installer menu)

The humidifier controller features two relay contacts for remote warning of the maintenance pre-alert or unit status (production). The terminals for these functions are M5.1, M5.2 and M6.1, M6.2, M6.3.

Index	Description	Parameter
Eb07	Signal M5	Alarm type on relay output M5 Default: maintenance pre-alert Normally-closed
	Signal M6	Alarm type on relay output M5 Default: alarm (general) Normally-closed

Digital outputs M5 and M5 can be configured as follows:
- production
- failed autotest alarm
- high conductivity warning
- level sensor malfunction alarm
- motor protector alarm (overtemperature)
- high boiler temperature alarm
- model not selected
- no water alarm
- low production warning
- main probe broken or disconnected alarm
- limit probe broken or disconnected alarm
- pre-heating probe broken or disconnected alarm
- main wireless probe group not working (only on heaterSteam titanium version)
- limit wireless probe group not working (only on heaterSteam titanium version)
- maintenance pre-alert (warning)
- maintenance alarm
- offline

Note: alarm = shutdown | warning = signal-only

Description	Parameter
M5 = maintenance pre-alert	maintenance early warning signal, helps plan maintenance in advance. See section "7.2.7 Cylinder operating hours" for more details on pre-alert configuration
M6 = alarm (general)	

The general alarm (associated, for example, with output M6) considers all the alarms with shutdown in the list, unless the alarm in question is selected for the other digital output (in this example M5).

7.3.7 Blower unit configuration (Installer menu)

To best manage the blower units in applications where steam is delivered directly into the room, the blower on and off times can be set. Delaying activation of the blower unit allows the system to reach the operating temperature before the fan is activated. Delaying deactivation of the blower unit guarantees that parts in contact with the steam will be completely dried, meaning that when next starting, there is no condensate in the steam distribution line, avoiding droplets being blown into the room.

Index	Description	Parameter
Eb08	Blower units	Set the delay time (seconds) for activation and deactivation of blower units
		Defaults: start delay: 0 seconds; stop delay: depending on the size (30 seconds for UR002-UR013; 60 seconds for UR020-UR040; 90 seconds for UR053-UR080)
		Possible settings: 0-600 seconds

7.3.8 Save logs (Service and Installer menu)

The log of the main variables can be saved to USB pen drive. The following variables are logged:
- Unit On/Off
- Unit status
- Active alarms
- Request (%)
- Production (kg/h)
- Level sensor status
- Fill
- Drain

The file is saved in .csv format. The logs are constantly saved to internal memory, and are thus exported to the memory key in the USB Host port by entering menu screen Eb09. Set "Export to USB" to "YES". Progress of the operation will be shown under "progress".

Index	Description	Parameter
Eb09	Export logs	Save the log of main variables to USB pen drive
		Export to USB = Yes, to save the log

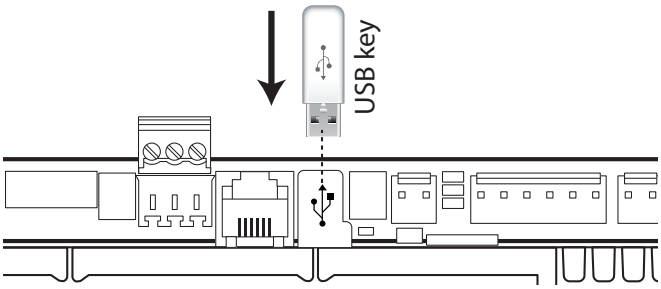

Fig. 7.d

7.3.9 Save alarm log

The alarm log can be saved to USB pen drive. To export the file, plug the USB pen drive into the c.pHC and go to screen Eb10, then set "YES" for the "Export?" parameter.

Index	Description	Parameter
Eb10	Export alarms	Save alarm log to USB pen drive
		Default: No

The file will be saved in the pen drive's root directory and will be called "AlrmLog.txt".

7.4 Menu E. Settings - c. Configuration

7.4.1 Main probe (Installer menu)

The main probe can be configured on the screen with index Ec01.

Index	Description	Parameter
EC01	Main probe	Main probe configuration;
		Defaults: Enable: Enabled (depending on the type of control) Type: 0-10V Minimum: 0% r.H. Maximum: 100% r.H. Offset: 0 En. Al (enable alarms): YES Delay: 120 seconds
		Possible settings: Type: 0-10V/0-1V/NTC/4-20mA/0-20mA/2-10V Minimum: 0-100%r.H . Maximum: 0-100%r.H. Offset: 0 En. Al (enable alarms): YES Delay: 0-999 seconds

For each probe, after having specified the type, the minimum and maximum values readable by the probe can be defined, as well as an "offset" to compensate for any imprecisions in the value read (example: offset = 3 %r.H. corresponds to 3 percent increase of the humidity value read by the probe). Parameter "En. Al." activates the alarms corresponding to any probe faults. If a malfunction is detected for a time greater than the value of "Delay" (seconds), the "main probe broken or disconnected" alarm is activated.

7.4.2 Limit probe (or second probe - Installer menu)

The limit probe (if present) can be configured on the screen with index Ec02.

Index	Description	Parameter
Ec02	Limit probe	Limit probe configuration;
		Default: Enable: Enabled (depending on the type of control) Type: 0-10V Minimum: 0% r.H. Maximum: 100% r.H. Offset: 0 En. Al (enable alarms): YES Delay: 120 seconds
		Possible settings: Type: 0-10V/0-1V/NTC/4-20mA/0-20mA/2-10V Minimum: 0-100%r.H. Maximum: 0-100%r.H. Offset: 0 En. Al (enable alarms): YES Delay: 120 seconds

For each probe, after having specified the type, the minimum and maximum values readable by the probe can be defined, as well as an "offset" to compensate for any imprecisions in the value read (example: offset = 3 %r.H. corresponds to 3 percent increase of the humidity value read by the probe). Parameter "En. Al." activates the alarms corresponding to any probe faults. If a malfunction is detected for a time greater than the value of "Delay" (seconds), the "limit probe broken or disconnected" alarm is activated.

7.4.3 Wireless probes (Installer menu)

Configuration of the wireless probes involves defining the weight of each probe; for further details on the averages see paragraph 7.2.2 "Weighted average of the probes".
Screen Ec03 can be used to deactivate, activate as main probe or limit probe each of the four possible wireless probes.

Index	Description	Parameter
Ec03	Wireless probes	Wireless probe configuration (main and limit)
		Defaults: Probe 1: disabled Probe 2: disabled Probe 3: disabled Probe 4: disabled
		Possible settings: disabled, main probe, limit probe

To configure the wireless probes, weights and communication times, use screens Ec04, Ec05, Ec06 and Ec07, depending on the number of probes connected.

Index	Description	Parameter
Ec04 Ec05 Ec06 Ec07	Wireless probe 1 Wireless probe 2 Wireless probe 3 Wireless probe 4	Configure probe weight and communication times;
		Defaults: Weight: 100 Transmission time: 10s Disconnection delay: ms
		Possible settings: Weight: 0 to 100 Transmission time: 5-3600 seconds Disconnection delay: ms

7.4.4 Maximum number of evaporation cycles between drain to dilute cycles settable by the user (Installer menu)

The number of evaporation cycles between two successive drain to dilute cycles is calculated internally, based on feedwater conductivity. To use the automatic calculation, set "Evaporation cycles before drain" = "Auto".

The "Evaporation cycles before drain" parameter sets the maximum number of evaporation cycles allowed between two drain to dilute cycles.

The number of evaporation cycles used by the controller will be the lower of the value set manually by the user and calculated automatically.

Index	Description	Parameter
Ec11	Evaporation cycles before drain	Set the number of evaporation cycles between two drain to dilute cycles.
		Default: number of cycles: Auto;
		Possible settings: Auto (automatic management according to feedwater conductivity); 1 to 40
		Remarks: if the parameter = "Auto", the number of evaporation cycles between two drain to dilute cycles is set automatically by the controller based on feedwater conductivity.

7.4.5 Duration of the fill and drain to dilute cycles settable by the user (Installer menu)

On screen Ec12, the duration of the fill time after the evaporation cycle and the duration of the drain to dilute cycle can be set in relation to the default parameter values.

Index	Description	Parameter
Ec12	Variation in fill and drain times	Set the fill after evaporation and drain to dilute times in relation to the default values
		Defaults: variation in fill time: 100% variation in drain time: 100%:
		Possible settings: variation in fill time: 20-100% variation in drain time: 0-190%

The duration of the drain to dilute cycle is set using the "variation in drain time" parameter, which defines the time as a% of the default value:

new drain time = (default drain time × variation in drain time)/100

Example: if the default time is 10 s and "variation in drain time" = 50%, then the new time will be = 10 s x 50/100 = 5 s.

The same also applies to the fill time after the evaporation cycle, in this case using the "variation in fill time" parameter:

new fill time = (default fill time × variation in fill time)/100

Remarks on the duration of the drain to dilute cycle: if the drain to dilute time is very short, there may be the RISK OF FOAM/CORROSION due to increased internal conductivity.
Low values should be set for the "variation in drain time" parameter only after having carefully evaluated the water quality and the consequences.

⚠ **Warning:** RISK OF FOAM FORMING WHEN "variation in drain time" IS TOO LOW FOR THE WATER QUALITY.

"variation in drain time" = 100 % means that the default value will be used.
"variation in drain time"< 100 % means that the drain time will be less than the default, consequently introducing less fresh water when next refilling, reducing the negative impact on steam production (important in high-precision applications).

Setting the "variation in drain time" for precise %RH control:
the "variation in drain time" must be set as low as possible, without however causing formation of foam/corrosion. Proceed by trial and error so as to find the most suitable value.

Remarks on the duration of the water fill cycle: this can be used to offset water pressure upstream of the humidifier. Decrease the fill time in the case of high pressure and vice-versa. Nonetheless, feedwater pressure must be within the range of pressure values specified in Tab 16.b (1-8 bars)

7.4.6 Set feedwater hardness (Installer menu)

The user can set the feedwater hardness. Carel provides an analysis kit (P/N: KITTH00000) to read feedwater hardness.
The "Water hardness" parameter defines the maintenance alarm for cleaning the cylinder and the heaters.

Index	Description	Parameter
EC13	Water hardness	Set the feedwater hardness
		Possible settings: Hardness: Auto, Manual Manual setting: 0-10°f, 10-20°f, 20-30°f, 30-40°f
		Remarks: if the value is set to Auto, the water hardness is estimated by the controller based on the conductivity value.

If water hardness is not set, the controller independently manages the type of water based on the conductivity reading. Although there is no reliable relationship between water hardness and conductivity, a hardness of 40°f is typically equivalent to a conductivity of approximately 900-1000 µS/cm at 20°C.

See paragraph 7.2.7 Cylinder operating hours for information on the maintenance alarm times in relation to water hardness or conductivity.

7.4.7 No feedwater setting (Installer menu)

In the event of no feedwater, the corresponding "No water" alarm is displayed. After the alarm has been displayed and the "no feedwater time" has elapsed, the controller attempts a new fill cycle. At each attempt, the "no feedwater time" is multiplied by the number of times it has already been carried out. The controller therefore performs a series of attempts to refill with water, for a maximum time of five hours after the alarm occurs. The alarm is reset only if the water level effectively reaches the intermediate position (yellow LED).

Index	Description	Parameter
EC14	No feedwater time	Set the time to check for no feedwater.
		Default: 10 minutes
		Possible settings: 0 to 20 minutes
		Step: 1 minute
		Remarks: if the value is set to 0, no more attempts will be made to refill the water and the alarm will not be reset

7.4.8 Enable and set high conductivity alarm (Installer menu)

The controller allows conductivity thresholds to be set for the activation of alarms when the limits are exceeded. In other words, excessive conductivity and consequently high concentration of salts in the feedwater can be signalled. These alarm thresholds are programmable using the following control parameters:

Index	Description	Parameter
EC15	High conductivity	Enable the high conductivity alarm and set the alarm delay.
		Defaults: enabled: YES alarm delay: 60 seconds
		Possible settings: enabled: YES/NO; alarm delay: 0-300 seconds
		Remarks: once the threshold has been exceeded (if the alarm is enabled), the controller waits for the "alarm delay" to elapse before displaying the alarm. If during this waiting time the conductivity falls back below the threshold, the alarm is not activated. This helps avoid false alarms due to variations in the conductivity reading.

7.4.9 Set high conductivity alarm thresholds (Installer menu)

Two high conductivity thresholds can be set. If exceeding the first (lower) threshold, a warning is shown without stopping operation, while if exceeding the higher threshold, an alarm is activated and the unit shuts down as a precaution.

Index	Description	Parameter
EC16	High conductivity	Set the high conductivity thresholds.
		Default: pre-alert: 1250 µS/cm alarm: 1500 µS/cm Hysteresis: 25 µS/cm
		Possible settings: pre-alert: 0-1500 µS/cm alarm: 0-1500 µS/cm Hysteresis: 0-100 µS/cm
		Remarks: the hysteresis is used to reset the alarm if the conductivity falls below the threshold by the value set for the "Hysteresis".

7.4.10 Remote ON/OFF operating logic (Installer menu)

Screen Ec22 is used to set the operating logic of the remote ON/OFF contact (normally open or normally closed).

Index	Description	Parameter
EC22	Remote ON input logic	Set the operating logic of the remote on/off input
		Default: Remote ON input logic = N.O
		Possible settings: Remote ON input logic: N.O., N.C.

7.4.11 Set the PWM period for the SSR (Installer menu)

Menu Ec23 can be used to change the modulation period of the SSR. The default value of the parameter is 8 seconds. Decreasing this value adjusts the precision on the relative humidity set point.

Index	Description	Parameter
EC23	SSR PWM period	Set the SSR modulation period
		Default: SSR PWM period = 8 seconds
		Possible settings: SSR PWM period: 1-199 seconds

7.5 E.Settings – d.Master/Slave

7.5.1 Master/Slave system network settings (Installer menu)

To increase total production capacity when one single unit is not sufficient, the Master/Slave function can be used to connect up to 20 units together in just one system. To set and enable the individual units in the system, go to the "Network" menu, specifically starting from screen Ed01.

Initial Master/Slave system configuration:

Index	Description	Parameter
Ed01	Master/Slave	Initial Master/Slave system configuration
		Press "PRG" to configure the Master/Slave network

Index	Description	Parameter
Ed02	Unit 1 Unit 2 - - Unit 20	Add unit to the Master/Slave system To add a unit to the network enter the unit's IP address. Scroll between the units using the UP/DOWN buttons

Master/Slave system function configuration: from screen Ed07 (Master/Slave production) press "PRG" for the following configurations:

Index	Description	Parameter
Ed02	Unit 1 Unit 2 - - Unit 20	Add unit to the Master/Slave system. To add a unit to the network enter the unit's IP address. Scroll between the units using the UP/DOWN buttons .
Ed03	Maximum production of Master/Slave system Unit rotation	Set the maximum Master/Slave system production. Load: this is the maximum capacity effectively required for the Master/Slave system, settable by the user. Maximum: this is the sum of the maximum capacities of the units added to the Master/Slave system
		Set the unit rotation logic. Rotation: Grouped (Default), Balanced
Ed04	Advanced preheating Rotation time	Enable the advanced preheating function for Master/Slave systems. Possible settings: YES/NO Set the auto-rotation time between units Settings: 0 to 65535 hours (Default 3 hours). If auto-rotation time = 0 the function is disabled
Ed05	Offline timeout.	Set the offline time for the units in the Master/Slave system Possible settings: 500-10000 ms
Ed06	Disconnect unit from Master/Slave system	Disconnect the current unit from the Master/Slave system Possible settings: YES/NO Remarks: this disconnects and removes the current unit from the Master/Slave system.

Display Master/Slave system production:

Index	Description	Parameter
Ed07	Master/Slave production	Display the request (%) and the production (kg/h / lbs/h) of the Master/Slave system

Display unit status and the percentage of production for each unit in the Master/Slave system:

Index	Description	Parameter
Ed08	Display Master/Slave system	Unit status with corresponding % of production
Ed09	Display info on individual unit.	Display unit operating hours, current production and any alarms. To scroll between the various units use the UP and DOWN arrows The display is available for each unit

Maintenance on the units in the Master/Slave system:

Index	Description	Parameter
Ed10	Unit switched off for maintenance.	Unit switched off for maintenance

For detailed information on the Master/Slave system, see chapter 8 "Master/Slave system".

7.6 E.Settings – e.Backup

7.6.2 Enable backup unit (Installer menu)

In some critical applications where relative humidity control is very important, it may be essential have a backup unit available in the event of malfunctions on the main unit. To enable the backup unit, go to screen Ee01:

Index	Description	Parameter
Ee01	Enable backup	Enable automatic unit backup in the event of shutdown, using a second independent unit.
		Default: Disabled
		Possible settings: Enabled/Disabled

After having enabled the backup function, the unit priority can be defined so as set the unit that will start first in the event of simultaneous activation:

Index	Description	Parameter
Ee02	Priority when starting	Definition of backup unit priority
		Default: Disabled
		Possible settings: Enabled/Disabled

The priority must be set to "YES" only on one of the two units; the "priority" parameter on the second unit must be set to "NO".

7.7 E.Settings – f.Manual mode

7.7.1 Manual mode (Service and Installer menu)

During first start-up or maintenance, "manual mode" may be useful in order to check the operation of the main devices on the heaterSteam humidifier. All the operations carried out in this menu have actual effect on the unit, i.e. effectively activate/deactivate or modify the status of the components. Manual mode is only available when the unit is OFF and without any active alarms. In addition, to safeguard the unit, the heaters can only be activated when there is water in the cylinder (high level, corresponding to green LED on)

⚠ **Important:** manual mode should only be activated by qualified personnel; improper use may cause serious damage to the unit.

Index	Description	Parameter
Ef01	Manual mode	Enable "Manual mode" to check operation of the individual components.
		Default: Disabled
		Possible settings: Disabled, manual outputs, manual production
		Remarks: when exiting "Manual mode", the settings are restored and normal operation resumes automatically. If the user does not set any parameters in the "Manual mode" menu for 30 minutes, manual mode is automatically disabled.

Index	Description	Parameter
Ef02	Manual management of outputs	Enable "Manual mode" to check operation of the individual components.. Test fill valve Test drain pump Open/close the contactor SSR status (depending on the water level in the cylinder) SSR ON time (depending on the water level in the cylinder) SSR OFF time (depending on the water level in the cylinder)

Index	Description	Parameter
Ef03	Manual management of production request	Manual production settings.

7.8 E.Settings – g.Initialisation

7.8.1 Initial wizard (Service and Installer menu)

The Wizard menu, screen index Eg01, is used to initiate step-by-step programming of the parameters required for installation. Below are the steps included in the first start-up procedure (some steps may not be displayed, if not necessary):

1/9 - select the model (only if the replacement controller is not configured);
2/9 - water hardness: auto or user-defined;
3/9 - manual water hardness setting;
4/9 - type of control;
5/9 - select the main room probe type;
6/9 - select the limit probe type;
7/9 - set the limits for the active probes;
8/9 - set the drain to dilute cycles: auto or user-defined;
9/9 - manual drain to dilute cycle setting.

Index	Description	Parameter
Eg01	Wizard	Start the wizard for initial unit configuration Set whether to display the wizard when next restarting
		Default: wizard enabled: YES

For further information, see paragraph 6.2 Activation sequence.

7.8.2 Set the language (Service and Installer menu)

The first time that the unit is powered on, the first requirement is to select the menu language. If needing to change the language subsequently, go to screen Eg02. Once having displayed the screen to set the language, press "ENTER", to exit the screen without changing the setting press "ESC".

Index	Description	Parameter
E902	Language	Set the language.
		Default: English
		Possible settings: 1. English 2. Italiano 3. Deutsch 4. Francais 5. Espaniol

7.8.3 Set the unit of measure (Installer menu)

Screen Eg03 is used to select the system for the units of measure: International (° C, kg/h) or Imperial (°F, lb/h).

In addition, the language selection screen when starting can be disabled.

Index	Description	Parameter
E903	Unit of measure and language when starting	Select the metric system for the units of measure. Display the change language screen when starting.
		Defaults: units of measure: depending on unit part number. Show change language when starting: YES
		Possible settings: units of measure: International, Imperial Show change language when starting: YES, NO

7.8.4 Set and change passwords (Service and Installer menu)

Screen Eg04 is used to change and/or set the Service and Installer passwords.
The passwords are 4-digit numbers.
The default Installer password is: 0077
The default Service password is: 0044

Index	Description	Parameter
E904	Change password	Set and change the passwords
		Defaults: Installer: 0077 Service: 0044

7.8.5 Factory reset (Service and Installer menu)

To perform a factory reset on the unit and restore all the parameters to the default values, go to screen Eg06.

Index	Description	Parameter
E906	Inst. Default	Unit factory reset.
		Remarks: follow the instructions shown on the display. Confirmation will be requested before resetting the values

⚠ **Important:** performing a factory reset cancels all the controller settings and restores the factory default values.

7.8.6 Download and update software from USB pen drive

The ksa.carel.com site can be downloaded from the update package.
The unit's software can be updated using a USB pen drive plugged directly into the c.pHC controller. On the pen drive, create an UPGRADE directory and copy the software update file to this directory.
Once having plugged the pen drive into the controller, go to screen Eg07 and set the "Update unit software" parameter to "YES".

Index	Description	Parameter
E907	Software update	Start software update from USB pen drive
		Default: No

The steps for updgrading the SW/OS displayed on the pGD are:
- Save user parameters
- SW/OS upgrade
- Restore default parameter values
- Write user parameters

Once the upgrade is complete, remove the pen drive from the controller. After upgrading, the main user parameters do not need to be configured as the upgrade automatically restores them.

7.8.7 Export parameters to USB pen drive

The unit's parameter configurations can be exported to USB pen drive, and subsequently loaded onto a second unit, making installation and setup even faster.

To save the parameters, plug the USB pen drive into the c.pHC and then go to screen Eg08 and set the "Export?" parameter to "YES".

Index	Description	Parameter
E908	Export parameters	Start exporting configuration from unit to USB pen drive
		Default: No

The exported file will automatically be saved in the pen drive's root directory and will be called: "UR3cgg.txt"

7.8.8 Import parameters onto the unit

The unit's parameter configurations can be imported from a USB pen drive. To import the parameters, make sure that the exported file (see paragraph 7.8.8) is in the pen drive's root directory and is called: "UR3cgg.txt". Then plug the USB pen drive into the c.pHC and go to screen Eg08, and set the "Import?" parameter to "YES".

Index	Description	Parameter
E909	Import parameters	Start importing configuration from USB pen drive to unit
		Default: No

7.9 E. Settings - h. Supervision

7.9.1 Supervisor network address setting (Installer menu)

Supervision can be enabled on the Ethernet network or BMS serial port. The following protocols are available to be set by the user:

Port	Protocol
BMS	Carel, ModBus, BACnet, Carel retro
Ethernet	ModBus, BACnet

On screen Eh01, the port and supervisor protocol can be set, as well as the unit's supervision address for the BMS port.

Index	Description	Parameter
Eh01	Unit supervision address on BMS port	ISet the unit's supervision address and protocol for BMS port.
		Default: Address: 1; Protocol: ModBus; On/Off from SV: No; Control from SV: No;
		Possible settings: Address: 1-247 Protocol: Modbus, BACnet, Carel, Carel retro

Address is the device's supervision address on the BMS port. Enabling or disabling the parameters "On/Off from SV" and "Control from SV" activates or deactivates the response to the corresponding signals from the supervisor.
The "Carel retro" protocol can be used by existing supervisors with previous versions of heaterSteam (UR*1 and UR*2).
For other supervisor protocols, select Carel protocol and use the Carel external gateway (supernode for humidification).

7.9.2 BMS port settings (Installer menu)

Screen Eh02 is used to set supervisor communication on the BMS port.

Index	Description	Parameter
Eh02	BMS port supervision settings	Set the communication parameters for supervision via BMS: Baud rate, stop bits and parity.
		Defaults: Baud rate: 19200 Stop bits: 2 Parity: None

7.9.3 BACnet MS/TP supervisor settings (Installer menu)

To set the address, maximum number of master units and maximum number of frames for BACnet MS/TP supervision systems, use screen Eh03. The screen is only displayed when supervision is configured on the BMS port with the BACnet protocol.

Index	Description	Parameter
Eh03	BACnet MS/TP configuration	Set the address, maximum number of masters and maximum number of frames.
		Defaults: Address: 0 Max masters: 127 Max frames: 10

For BACNet MS/TP, in addition to setting the parameters in screen Eh03, it is also necessary to set the parameter on screen Eh04, Device instance.

Index	Description	Parameter
Eh04	Device Instance	Default: 77000

7.9.4 Ethernet network settings (Installer menu)

To connect the unit to the local Ethernet network for operation in Master/Slave mode, software Backup/Rotation or use the webserver, set the DHCP, IP, subnet mask, gateway and DNS parameters.

Important: these values must be provided by the local network administrator.

Index	Description	Parameter
Eh04	Ethernet network settings	Set the unit's IP address for the Ethernet connection. Set DHCP, subnet mask, gateway, DNS.
		Defaults: DHCP: Off IP: 192.168.0.1 (unit's IP address) Mask: 255.255.255.0 (subnet mask) GW: 192.168.0.1 (gateway) DNS: 0.0.0.0 Update?: NO

The following values are set by default on each unit:
DHCP: Off
unit's IP address: 192.168.0.1
subnet mask: 255.255.255.0
gateway: 192.168.0.1
DNS: 0.0.0.0

After having modified the parameters, set the "Update?" parameter to "YES" to update the IP address.

Important: the controller is not accessible directly on the internet as a firewall guarantees remote access only via a secure connection (Carel tERA cloud or encrypted VPN connection).

7.9.5 Supervisor settings for ModBus or BACnet on TCP/IP (Ethernet port) (Installer menu)

Both Modbus and BACnet are available on the Ethernet port; to enable the protocol go to screen Eh06:

Index	Description	Parameter
Eh06	Supervision settings on Ethernet port	Select the protocol on the Ethernet port.
		En. ModBus TCP/IP: Enabled/Disabled En. BACnet TCP/IP: Enabled/Disabled Defaults: En. ModBus TCP/IP: Disabled En. BACnet TCP/IP: Enabled

If Bacnet protocol, the address must be set using the Eh04 mask.

Note: only one instance of the BACnet protocol is available, therefore it is not possible to activate BACnet on the BMS port and on the Ethernet port at the same time.

7.9.6 Restart controller following change in protocol

Any changes made to the communication protocols will require a controller restart. To restart, simply press the "ENTER" button when the following flashing message is shown:

7.10 E. Settings - i. Logout

7.10.1 Logout from the settings menu (Installer menu and Service)

Screen Ei01 is used to exit the Settings menu. The screen also describes the type of login performed (installer or service).

When accessing this screen, the following information will be shown (in the currently selected language).
To logout press "ENTER".
The main screen will then be displayed.
Press "ESC" to exit if not wanting to end the session.

8. MASTER/SLAVE SYSTEM

8.1 Description of the Master/Slave system

To obtain steam production higher than that provided by one single unit, several humidifiers can be connected together in a Master/Slave system. For example, if steam request is 160 kg/h, a Master/Slave system can be created with two 80 kg/h heaterSteam units.
A maximum of 19 Slave units can be connected to each Master, meaning a total of 20 humidifiers in the same system.
The Master and Slave units are connected using a local Ethernet network, and in the case of just two units (one Master and Slave) involves a direct connection between the two controllers via Ethernet RJ45 Category 5 cable.

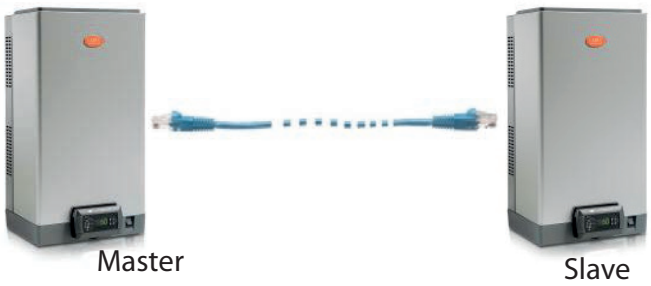

Fig. 8.a

If the Master/Slave system comprises three or more units (maximum 20), a network switch is required.

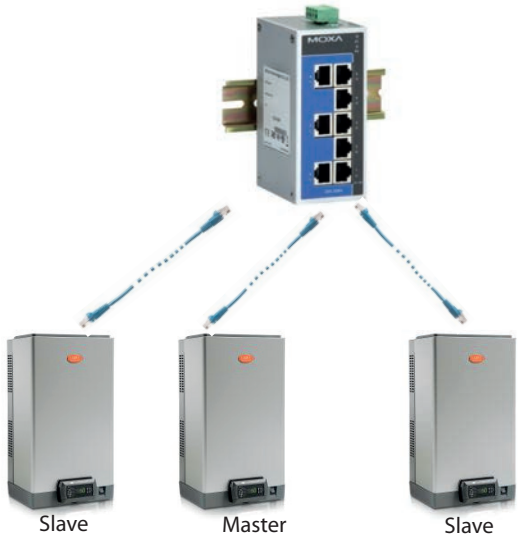

Fig. 8.b

The Ethernet port is available on the humidifier's c.pHC controller:

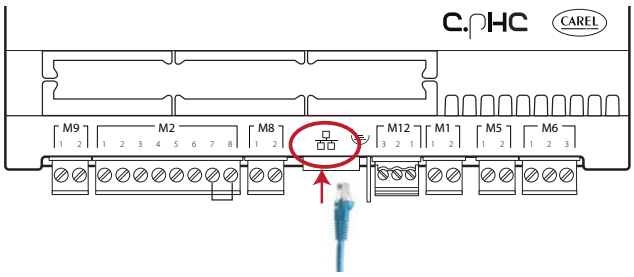

Fig. 8.c

Note: use Ethernet CAT-5 STP cable, maximum length 100 m. To connect the shield, use the earth connector provided on the controller.

8.2 Network switch for Master/Slave connection

The Master/Slave connection of more than two units requires the use of an industrial grade switch.
Carel markets a switch (P/N: KITSE08000) that can connect a maximum of eight units (8 Ethernet ports). If necessary, use several KITSE08000 switches with a cascaded arrangement.

Main technical specifications of the KITSE08000 switch:

Number of ports	8
Installation	DIN rail
Operating temperature	-10-60°C (14-140°F)
Power supply	12/24/48 VDC
	18-30 VAC (47-63Hz)
Current @24VDC	0.13A
Protection	IP30

8.3 Type of Master/Slave system installation

The Master/Slave system features one main unit (Master), which manages operation of the secondary units (Slaves). The external signal or probe connections, depending on the set control type, are made to just one of the humidifiers in the system. The unit that the signal is connected to will automatically be identified as the Master. Consequently, the Master does not need to be especially configured.

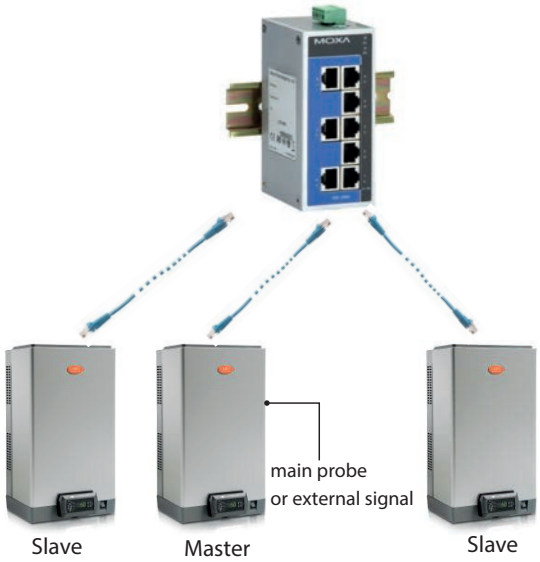

Fig. 8.d

While the Master unit is powered on, the system will be able to operate even in the event of malfunctions on the Master (alarms, stopped production,…), as the unit's controller will send all the required data to the Slaves. Obviously, unless redundancy has factored into the total production capacity, steam output in this case will be lower than requirements.
If the Master is switched off completely, the Master/Slave system will not be able to read the control/probe signals. Consequently, it is suggested to connect all the humidifiers in the system (or at least two units) to the external signal or fit them with independent probes).

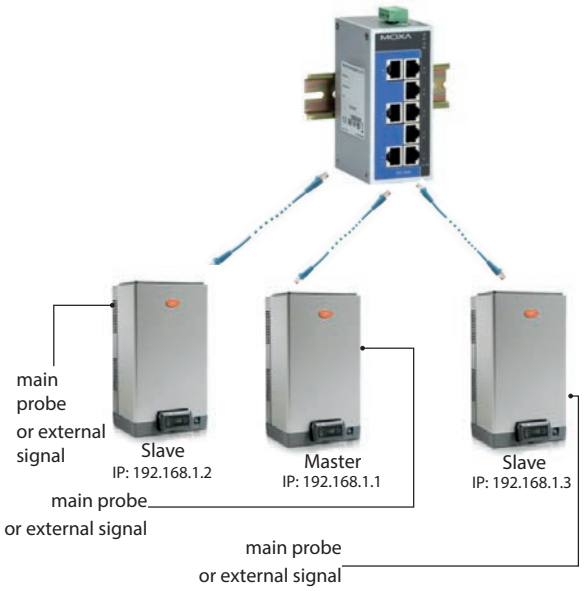

Fig. 8.e

Systems set up in this way will be able to cover the steam request. In this specific case, the Master will always be the unit with the lowest IP address of those connected to the signal/probes. If necessary, an additional humidifier (backup) can be installed to cover request in the event of malfunctions on one of the units in the system.

8.4 Master/Slave system configuration

To configure the Master/Slave system, proceed as follows:

1. Connect the probes or the external signal to the unit and complete the configuration (control type, type of signal, maximum production …);
2. Set the IP addresses of the individual units so that they belong to the same subnetwork (subnet mask); the screen index for this configuration is Eh02 (E. Settings – h. Supervision). The IP address is set on the display on each unit, assigning a different address to each unit in the same subnetwork. If necessary, contact the local network administrator. Remember that the default address for each unit is 192.168.0.1, and the default subnet mask is 255.255.255.0.
3. Connect the units making up the Master/Slave system to the local Ethernet network via a switch. If using just two units, an RJ45 category 5 cable can be used, connected directly to the Ethernet ports on the two c.pHC controllers.
4. Configure the Master/Slave system by enabling the units one at a time (this operation can be performed on the display on any of the units):
   4.1 Display screen index Ed01 and then access configuration mode by pressing "PRG".
   4.2 Enter the IP address for "Unit 1" and confirm by pressing "ENTER".
   4.3 Repeat the operations described above (4.1 and 4.2) for all the other units in the Master/Slave system.
   (The unit will join the Master/Slave system (online) immediately after being added to the network.)

Note: the Master unit will always (automatically) be the one with the lowest IP address out of the units connected to the probes or external signal.

Note: it may take a few seconds (max 10 s) for the Master to start sending the production request to the Slave/Slaves. This is also true when, automatically, the Master unit is changed (for example, in the event of malfunctions).

The evolved Master/Slave system with Ethernet connection is managed by the heaterSteam Titanium version by a cascaded connection between a series of units; for heaterSteam process version, the connection is made using terminals M8.1 and M8.2 that provide the production request (0 to 10 V).

See paragraph 4.10 "Production request analogue output for connection".

8.4.1 Maximum Master/Slave system production

In the same way as for the individual unit configuration, for the Master/Slave system the maximum capacity can also be set. To set the maximum capacity, go to menu Ed07 (E. Settings – d. Network), press **Prg** and use the UP/DOWN buttons until reaching menu Ed03.
The "Capacity" parameter identifies the maximum production request for the Master/Slave system, and can therefore by set by the user.
The "Maximum capacity" parameter (read-only), on the other hand, indicates the sum of the sizes of each unit added to the system; this value is therefore the maximum effectively available to the Master/Slave system. Consequently, "Capacity" will always be ≤ "Maximum capacity".
In any case, the maximum production can be defined for each individual unit in the system by limiting production from its maximum according to the size. In this case, "Maximum capacity" will be updated keeping in consideration these reductions.

8.4.2 Unit rotation logic in the Master/Slave system

The activation logic of the units in the Master/Slave system can be set, choosing between "Grouped" or "Balanced", on screens Ed03 and Ed04. On screen Ed07 (E. Settings – d. Network), press **Prg** and use the UP/DOWN buttons until reaching menu Ed03 or Ed04 (screen Ed04 is only shown if rotation is enabled on screen Ed03).

Grouped rotation logic:

- the units are activated in series, one after the other, according to steam request.
  Example: M/S system comprising two 80 kg/h (176lbs/hr) units, for a maximum total capacity of 160 kg/h (353lbs/hr). While steam request remains below 50% (80 kg/h) only one unit will be activated (for example, Unit 1), as soon as the request exceeds the 50%, the second unit will also be activated (in the example, Unit 2).

Balanced rotation logic:

- the units are activated in parallel at the same time, splitting the total production request between the number of units in the M/S system.
  Example: M/S system comprising two 80 kg/h (176lbs/hr) units, for a maximum total capacity of 160 kg/h (353lbs/hr). If the request is 50%, the rotation function activates both Unit 1 and Unit 2 at 50% of production (40 kg/h + 40 kg/h = 80 kg/h). If the request is 90% (144 kg/h) the rotation function activates both Unit 1 and Unit 2 at 90% (72 kg/h + 72 kg/h = 144 kg/h).

If the steam request does not require the use of all the units, the rotation function can take into account the units with the least operating hours (auto-rotation function) so as to ensure the individual units total the same number of operating hours. To enable and configure the operating hours for unit rotation, set the "auto-rotation time" parameter on screen Ed04.

Note: if the "auto-rotation time" parameter is = 0, the auto-rotation function is disabled.

8.4.3 Advanced preheating function for the Master/Slave system

Activating advanced preheating on the Master/Slave system allows the Slave unit or units currently in standby to be automatically pre-activated. When the request reaches 90% of production on the units that are currently operation, preheating is activated on the remaining units. Activation of advanced preheating also depends on the type of rotation selected.
Example: M/S system comprising two 80 kg/h (176lbs/hr) units, for a maximum total capacity of 160 kg/h (353lbs/hr). While steam request remains below 72 kg/h (90% of 80 kg/h = 72 kg/h) only one unit will be active (for example, Unit 1). When the request exceeds 72 kg/h, preheating will be activated on Unit 2 so as to have a faster response when the request exceeds 80 kg/h. The advanced preheating function for the M/S system is enabled/disabled on screen Ed04.

Note: the automatic preheating function for the M/S system only applies to "Grouped" rotation.

8.4.4 Disconnect unit from the Master/Slave system

To remove a unit from the Master/Slave system, thus reducing the number of units available in the system, use the "Disconnect unit" function on screen Ed06. This can be done on any of the humidifiers in the system.

Note: once the unit has been disconnected, this will no longer be visible in the Master/Slave system, as its IP address will be removed from the list. If a unit is disconnected erroneously, the system can be restored on screen Ed01 (entering its IP). This must be done from the display on a unit that is already connected to the system.

8.4.5 Display Master/Slave system

To display a summary of the Master/Slave system , go to screen Ed08. In screen Ed07 (E. Settings – d. Network), press the DOWN button to go to menu Ed08.
Menu Ed08 has five pages in total that display all the units (01, 02, …, 20), the status of each unit and the current production as a percentage. The following table explains the Master/Slave network unit status indications:

Symbol	Unit status in the Master/Slave system
	Indicates the current unit being displayed (PGD or web server)
	The unit is: online
	The unit is: offline
	Unit not configured and not included in the Master/Slave system

The units in the Master/Slave system can also be selected one by one, displaying maximum production, unit status, operating hours, current production request and any alarms.
To enter this display, from screen Ed08, select the desired unit and press thus accessing screen Ed09. Scroll using the UP/DOWN buttons to display the details of all the units.

8.4.6 Software backup function in the Master/Slave system

Master/Slave mode can also be used to manage the software backup function; if one or more units in the Master/Slave system is affected by malfunction, the system automatically restores steam production by activating the backup units. The lost production in relation to the steam request is thus compensated by increasing production on the individual units (where possible) and/or starting any units in standby.

Even if not strictly necessary, to ensure the backup function, the external control signal must be sent to all the units in the Master/Slave system; if using probes on the other hand, each unit must be fitted with a probe. Only in this way can complete operation be guaranteed in the event of malfunctions.

Note: if a unit goes offline due to a malfunction or shutdown, it will temporarily be excluded from the system, and when next restarted it may take 15 seconds or more to automatically come online again.

8.4.7 Advanced backup functions (software) for maintenance

During maintenance or cleaning on a unit in the Master/Slave system, the backup function can be disabled for maintenance. This allows production to start on a unit in standby, set as backup, before switching off the humidifier in question for maintenance. In this way, service continuity can be guaranteed in applications where required humidity control is very precise and continuous over time.
To activate backup for maintenance, proceed as follows:

5. Enter the menu with screen index Ed07 (Network)
6. Press the DOWN button to display the list of units (Ed08)
7. Scroll to the unit on which maintenance is required (Unit 1, Unit 2, …) and press to confirm (screen Ed09).
8. Press **Prg** to access screen Ed10 and set the "Request switch unit off" = YES. Wait for the display to show the message: "The unit can now be switched off for maintenance" and then switch the unit off.

Once maintenance has been completed, simply switch the humidifier on again, and the will automatically come back online.

Note: to activate the advanced software backup functions for maintenance, the backup unit must be connected to the probes or external signal.

9. WEB SERVER

9.1 Integrated web server

The integrated web server is used to configure and monitor the main unit parameters directly from a PC. In fact, using the Ethernet port on the humidifier controller, the unit can be accessed via a local network by simply entering its IP address in the browser.

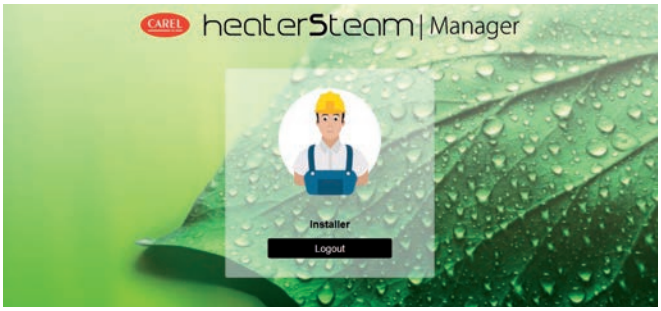

Fig. 9.a

To log in and access the various menu items, use the installer or service password (see paragraph 6.12 "Main menu").

Note: the web server is managed in the heaterSteam titanium version.

9.2 Connecting to the integrated web server

For the physical connection to the controller from a PC, must use the RJ45 Ethernet port on the c.pHC and an Ethernet category 5 cable.

Fig. 9.b

The Ethernet port is available on the humidifier's c.pHC controller:

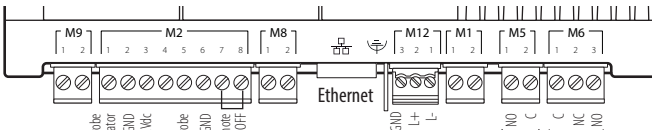

Fig. 9.c

The PC and the humidifier controller (or all controllers, for Master/Slave systems) must be part of the same subnetwork.
The default network configurations for the c.pHC are:
unit's IP address: 192.168.0.1
subnet mask: 255.255.255.0
gateway: 192.168.0.1

For example, the PC's network settings can be changed as follows:
unit's IP address: 192.168.0.2
subnet mask: 255.255.255.0
gateway: 192.168.0.1

To do this, access the "Network and sharing center" on the PC and go to "Local network connection". Then modify the addresses, as shown above, for Internet protocol version 4.

Each c.pHC controller can obviously also be added to the Ethernet local network, allowing the web server to be accessed from any point in the network and for each humidifier.

Important: the controller is not accessible directly on the internet as a firewall guarantees remote access only via a secure connection (Carel tERA cloud or encrypted VPN connection).

9.3 Description of the web server function

The web server "Home" page provides access to the display, so as to carry out all the configuration operations in the same way as if working directly on the pGD. In addition, there will be an immediate response from unit concerning its operation in the network.

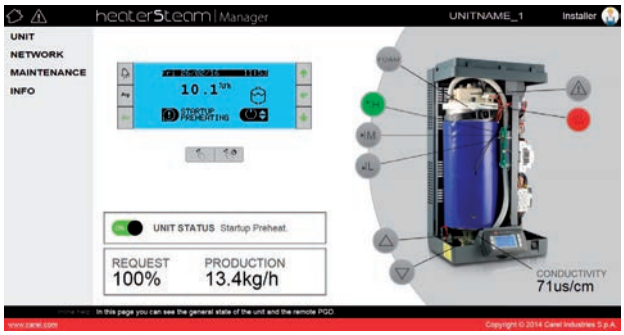

Fig. 9.d

The main configurations and information are:
- UNIT
- NETWORK
- MAINTENANCE
- INFO

Unit menu
Probes: information and configuration of the main and limit probe. Select the type of signal and define the minimum and maximum values.
Wireless: enable and associate each wireless probe to the main probe group or limit probe group. Read the humidity and/or temperature, level and battery status.
Control: select the control type. Set the set point, differential, minimum and maximum.
Configuration: configure the time and date. Configure the main alarms and variation in percentages of fill and drain times.
Scheduler: enable and set the daily and weekly time bands.

Network menu
Display a summary of the status of the units in the advanced Master/Slave system.

Maintenance
Timers: display cylinder and unit operating hours. Display the time remaining until maintenance is required and set the maintenance pre-alert.

Logs: display the log of main variables (production, set point, drain pump status, fill valve status, request, unit status).

Live: real time display of the main variables (production, set point, drain pump status, fill valve status, request, unit status).

Info
Unit info: information on the unit model and software version. Select language and unit of measure.
Resources: useful links (Carel website, heaterSteam manual and page on Carel website).
Guide & FAQ: general information on using the web server.

Note: to avoid incorrect settings, some of the main unit operating parameters can only be modified via the web server when the unit is off (off from keypad).

10. HARDWARE BACKUP

For applications that require continuous humidity control, a second backup unit may be required, which is automatically activated in the event of a malfunction on the first.

The heaterSteam controller features a dedicated digital input and output for the backup connection, so as to guarantee, via the normally-open contact, activation of the second unit.

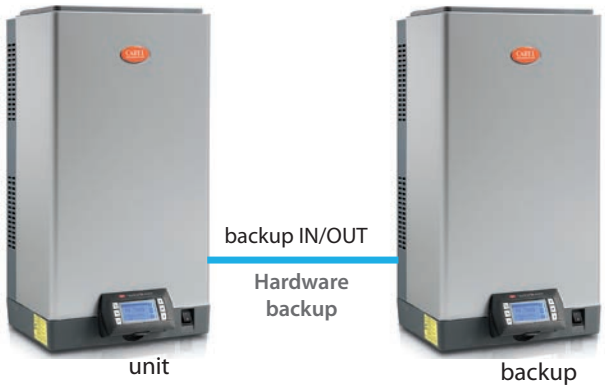

Fig. 10.a

Connection between two units for the hardware backup function:

terminal	function
M9.1	Backup and rotation contact common
M9.2	Backup and rotation contact (NO)
M2.2	GND
M2.4	Backup / rotation digital input

Tab. 10.f

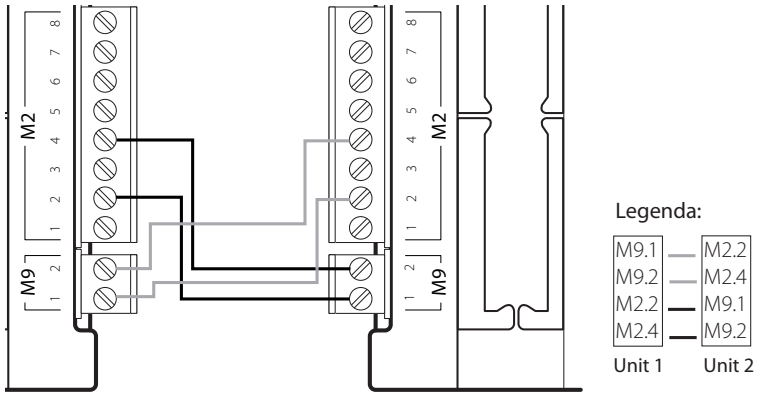

Fig. 10.b

The hardware backup function must be activated on the menu in screen Ee01. Screen Ee02 is used to set the unit with higher priority in the event of simultaneous activation.

To ensure service continuity, the external signal or probes must be connected to both units; in this way, both the main unit and the backup unit will be completely independent. If using autonomous control with probes, it is recommended to use dedicated probes for each unit (main probe and limit probe), in other words, do not share the probes between the units. This will guarantee service even in the event of probe malfunctions.

Note: the hardware backup function is managed on the heaterSteam titanium version.

11. SUPERVISOR NETWORK

11.1 Supervisor network protocols and configuration

The humidifier can be connected to a supervisor via serial (BMS) or Ethernet network. The Carel, ModBus and BACnet protocols are supported as standard by the units.

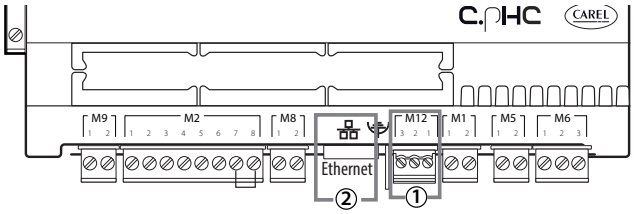

Fig. 11.a

Port	Terminal on c.pHC controller	Protocol
BMS (1)	M12.1, M12.2, M12.3	Carel, ModBus, BACnet, Carel retro
Ethernet (2)		ModBus, BACnet

Tab. 11.a

To configure supervision on the BMS port (1), go to "SETTINGS – SUPERVISION", specifically screens Eh01, Eh02 and Eh03.

If connecting the supervisor to the Ethernet port (2), set the network parameters (DHCP, IP address, subnet mask, gateway, DNS) on screen Eh04.
For other supervisor protocols, select the Carel protocol on the BMS serial port and use the Carel external gateway (supernode for humidification: SNU0000EM0) combined with the desired supervision card (depending on the protocol).

Note: Ethernet CAT-5 STP cable, maximum length 100 m. To connect the shield, use the earth connector provided on the controller.

Note: for BMS and Fieldbus, use shielded cables with the shield connected to earth.

11.2 Table of supervisor variables

The variables shown in the lists below are only a set of all the internal variables on the heaterSteam humidifier.

DO NOT CONFIGURE ANY VARIABLES THAT ARE NOT SHOWN IN THE TABLES TO AVOID RISKING INCORRECT HUMIDIFIER OPERATION.

11.2.1 Table of Carel variables

Below are the variables used by the Carel protocol.

Integer variables

Variable	Variable name	R/W	Description	Category
1	SV_SWVer	R	Software version	Unit info
2	SV_OSVer	R	OS version	
3	UnitModel	R	Model version	
4	Conductivity	R	Conductivity	I/O
5	WirelessPrbInfo_1.BattLev	R	Wireless probe 1: battery level	Wireless probes
6	WirelessPrbInfo_1.RadioSignalLev	R	Wireless probe 1: wireless signal level	
7	WirelessPrbInfo_2.BattLev	R	Wireless probe 2: battery level	
8	WirelessPrbInfo_2.RadioSignalLev	R	Wireless probe 2: wireless signal level	
9	WirelessPrbInfo_3.BattLev	R	Wireless probe 3: battery level	
10	WirelessPrbInfo_3.RadioSignalLev	R	Wireless probe 3: wireless signal level	
11	WirelessPrbInfo_4.BattLev	R	Wireless probe 4: battery level	
12	WirelessPrbInfo_4.RadioSignalLev	R	Wireless probe 4: wireless signal level	
13	UnitStatus	R	Unit status	Unit status
14	WorkHr	R	Unit operating hours	
15	CylWorkHr	R	Cylinder operating hours	
19	RegulationCfg.RegTyp	RW	Control type	Reg
20	ThrshAlrmDT	RW	High humidity/temperature alarm delay	Alrm T
21	MainPrbCfg.Typ	RW	Main probe type	Probes cfg
22	LimitPrbCfg.Typ	RW	Limit probe type	
23	WHardnessMan	RW	Manual water hardness value (if WHardnessTyp is TRUE)	Unit cfg
24	EvapCycleNoThrshsh	RW	Number of evaporation cycles (0=auto)	
25	FillTScale	RW	Variation in fill time	
26	DilDrainTScale	RW	Variation in drain time	
27	Scheduler.SchedDayToSet	RW	When >0, day of the week to be configured (1=Monday, 7=Sunday)	Scheduler setting
28	SchedDayCfg[0].StartHr	RW	Band 1 start hours	
29	SchedDayCfg[0].StartMin	RW	Band 1 start minutes	
30	SchedDayCfg[0].WorkMode	RW	Band 1 operating mode	
31	SchedDayCfg[1].StartHr	RW	Band 2 start hours for	
32	SchedDayCfg[1].StartMin	RW	Band 2 start minutes	
33	SchedDayCfg[1].WorkMode	RW	Band 2 operating mode	
34	SchedDayCfg[2].StartHr	RW	Band 3 start hours	
35	SchedDayCfg[2].StartMin	RW	Band 3 start minutes	
36	SchedDayCfg[2].WorkMode	RW	Band 3 operating mode	
37	SchedDayCfg[3].StartHr	RW	Band 4 start hours	
38	SchedDayCfg[3].StartMin	RW	Band 4 start minutes	
39	SchedDayCfg[3].WorkMode	RW	Band 4 operating mode	
40	SchedDayCfg[4].StartHr	RW	Band 5 start hours	
41	SchedDayCfg[4].StartMin	RW	Band 5 start minutes	
42	SchedDayCfg[4].WorkMode	RW	Band 5 operating mode	
43	SchedDayCfg[5].StartHr	RW	Band 6 start hours	
44	SchedDayCfg[5].StartMin	RW	Band 6 start minutes	
45	SchedDayCfg[5].WorkMode	RW	Band 6 operating mode	
46	UoM	RW	Unit of measure	UoM

Variable	Variable name	R/W	Description	Category
47	Year	RW	Year	Clock
48	Month	RW	Month	
49	Day	RW	Day	
50	Hour	RW	Hour	
51	Minute	RW	Minutes	
52	SetTimezone	RW	Time zone	
53	NetStatus[1]	R	Unit 1 status	Network feedback
54	NetStatus[2]	R	Unit 2 status	
55	NetStatus[3]	R	Unit 3 status	
56	NetStatus[4]	R	Unit 4 status	
57	NetStatus[5]	R	Unit 5 status	
58	NetStatus[6]	R	Unit 6 status	
59	NetStatus[7]	R	Unit 7 status	
60	NetStatus[8]	R	Unit 8 status	
61	NetStatus[9]	R	Unit 9 status	
62	NetStatus[10]	R	Unit 10 status	
63	NetStatus[11]	R	Unit 11 status	
64	NetStatus[12]	R	Unit 12 status	
65	NetStatus[13]	R	Unit 13 status	
66	NetStatus[14]	R	Unit 14 status	
67	NetStatus[15]	R	Unit 15 status	
68	NetStatus[16]	R	Unit 16 status	
69	NetStatus[17]	R	Unit 17 status	
70	NetStatus[18]	R	Unit 18 status	
71	NetStatus[19]	R	Unit 19 status	
72	NetStatus[20]	R	Unit 20 status	
93	SV_Command	RW	1: reset alarms, 2: reset hour counter	Comm
94	SV_CommandResult	R	1: successful, 2: failed, 3: invalid command	

Tab. 11.b

Analogue variables

Variable	Variable name	R/W	Description	Category
1	MainPrb	R	Main probe value (REAL)	I/O
2	LimitPrb	R	Limit probe/second probe value (REAL)	
3	PreheatPrb	R	NTC preheating probe value (REAL)	
4	WirelessPrbVal_1.Hum	R	Wireless probe 1: Humidity	Wireless probes
5	WirelessPrbVal_1.Temp	R	Wireless probe 1: Temperature	
6	WirelessPrbVal_2.Hum	R	Wireless probe 2: Humidity	
7	WirelessPrbVal_2.Temp	R	Wireless probe 2: Temperature	
8	WirelessPrbVal_3.Hum	R	Wireless probe 3: Humidity	
9	WirelessPrbVal_3.Temp	R	Wireless probe 3: Temperature	
10	WirelessPrbVal_4.Hum	R	Wireless probe 4: Humidity	
11	WirelessPrbVal_4.Temp	R	Wireless probe 4: Temperature	
12	SV_PwrReq	RW	Production request percentage from supervisor	Unit Status
13	CurrProdPh	R	Current production in kq/h (lbs/h)	
15	GlbSetP_Hum	RW	Humidity control set point	Regulation
16	GlbSetP_Temp	RW	Temperature control set point	
17	RegulationCfg.Hyst	RW	Control hysteresis	
18	RegulationCfg.Diff	RW	Control differential	
19	GlbSetPLim_Hum	RW	Set point limit for humidity control	
20	GlbSetPLim_Temp	RW	Set point limit for temperature control	
21	RegulationCfg.DiffLim	RW	Limit differential	
22	RegulationCfg.MinReq	RW	Minimum production	
23	AlrmThrshHumLo	RW	Low humidity alarm threshold	Alarms Thresholds
24	AlrmThrshHumHi	RW	High humidity alarm threshold	
25	AlrmThrshHumHiLim	RW	High humidity limit alarm threshold	
26	AlrmThrshTempLo	RW	Low temperature alarm threshold	
27	AlrmThrshTempHi	RW	High temperature alarm threshold	
28	AlrmThrshTempHiLim	RW	High temperature limit alarm threshold	
29	MainPrbCfg.Mi_Hum	RW	Main probe minimum humidity value	Probes cfg
30	MainPrbCfg.Ma_Hum	RW	Main probe maximum humidity value	
31	MainPrbCfg.Mi_Temp	RW	Main probe minimum temperature value	
32	MainPrbCfg.Ma_Temp	RW	Main probe maximum temperature value	
33	LimitPrbCfg.Mi_Hum	RW	Limit probe minimum humidity value	
34	LimitPrbCfg.Ma_Hum	RW	Limit probe maximum humidity value	
35	LimitPrbCfg.Mi_Temp	RW	Limit probe minimum temperature value	
36	LimitPrbCfg.Ma_Temp	RW	Limit probe maximum temperature value	
37	RegulationCfg.PwrCorrectionFactor	RW	Power correction for thermal dissipation	Unit Cfg
38	SchedDayCfg[0].SetP	RW	Band 1 set point	Scheduler
39	SchedDayCfg[1].SetP	RW	Band 2 set point	
40	SchedDayCfg[2].SetP	RW	Band 3 set point	
41	SchedDayCfg[3].SetP	RW	Band 4 set point	
42	SchedDayCfg[4].SetP	RW	Band 5 set point	
43	SchedDayCfg[5].SetP	RW	Band 6 set point	
44	NetReq	R	Current system request	Network feedback
45	NetProd	R	Current system production	

Tab. 11.c

Digital variables

Variable	Variable name	R/W	Description	Category
1	RemOn	R	Remote on/off	I/O
2	ThermPtcDin	R	Thermal DIN status	
3	LevSenStatus.Low	R	Level sensor: low level	
4	LevSenStatus.Hi	R	Level sensor: high level	
5	LevSenStatus.Foam	R	High level sensor: foam	
6	OnOffStatus	R	Unit status On or OFF	On/Off
7	OnBySV	RW	Start command from SV (Supervisor)	
13	PreMaintWarn	R	Maintenance pre-alert (not an alarm)	Alarms
14	CurrBlkAlrm.IsBlocker	R	Shutdown alarm	
15	CurrBlkAlrm.IsPresent	R	Resettable alarm	
16	CurrBlkAlrm.Warning	R	Warning	
17	Alrm_Autotest.Active	R	Autotest alarm	
18	Alrm_HighConductAl.Active	R	High conductivity alarm	
19	Alrm_LevSen.Active	R	Level sensor broken alarm	
20	Alrm_ThermPtc.Active	R	Thermal overload alarm	
21	Alrm_Wmiss.Active	R	No water alarm	
22	Alrm_LowProd.Active	R	Low production alarm	
23	Alrm_MainPrb.Active	R	Main probe fault alarm	
24	Alrm_LimPrb.Active	R	Limit probe fault alarm	
25	Alrm_PreHPrb.Active	R	NTC preheating probe fault alarm	
26	Alrm_HiHum.Active	R	High humidity alarm	
27	Alrm_LoHum.Active	R	Low humidity alarm	
28	Alrm_HiHumLim.Active	R	High humidity limit alarm	
29	Alrm_Foam.Active	R	Foam alarm	
30	Alrm_PeriodicMaint.Active	R	Periodical maintenance request	
31	Alrm_CylFull.Active	R	Cylinder full alarm	
32	Alrm_ConductPrb.Active	R	Conductivity probe fault alarm	
33	Alrm_HighConductWr.Active	R	High conductivity warning	
34	Alrm_RetMem.Active	R	Retain memory damaged warning	
35	Warn_Autotest.Active	R	Autotest warning	
36	Warn_LevSen.Active	R	Level sensor warning	
37	Warn_LowProd.Active	R	Low production warning	
38	Alrm_WirelessPrb_1_Offline.Active	R	Wireless probe 1 offline	
39	Alrm_WirelessPrb_2_Offline.Active	R	Wireless probe 2 offline	
40	Alrm_WirelessPrb_3_Offline.Active	R	Wireless probe 3 offline	
41	Alrm_WirelessPrb_4_Offline.Active	R	Wireless probe 4 offline	
42	Alrm_MissingModel.Active	R	Model not configured	
43	Alrm_NetUnit_1.Active	R	Active alarm on unit 1	
44	Alrm_NetUnit_2.Active	R	Active alarm on unit 2	
45	Alrm_NetUnit_3.Active	R	Active alarm on unit 3	
46	Alrm_NetUnit_4.Active	R	Active alarm on unit 4	Alarms
47	Alrm_NetUnit_5.Active	R	Active alarm on unit 5	
48	Alrm_NetUnit_6.Active	R	Active alarm on unit 6	
49	Alrm_NetUnit_7.Active	R	Active alarm on unit 7	
50	Alrm_NetUnit_8.Active	R	Active alarm on unit 8	
51	Alrm_NetUnit_9.Active	R	Active alarm on unit 9	
52	Alrm_NetUnit_10.Active	R	Active alarm on unit 10	
53	Alrm_NetUnit_11.Active	R	Active alarm on unit 11	
54	Alrm_NetUnit_12.Active	R	Active alarm on unit 12	
55	Alrm_NetUnit_13.Active	R	Active alarm on unit 13	
56	Alrm_NetUnit_14.Active	R	Active alarm on unit 14	
57	Alrm_NetUnit_15.Active	R	Active alarm on unit 15	
58	Alrm_NetUnit_16.Active	R	Active alarm on unit 16	
59	Alrm_NetUnit_17.Active	R	Active alarm on unit 17	
60	Alrm_NetUnit_18.Active	R	Active alarm on unit 18	
61	Alrm_NetUnit_19.Active	R	Active alarm on unit 19	
62	Alrm_NetUnit_20.Active	R	Active alarm on unit 20	
63	Alrm_WirelessPrb_1_LowBatt.Active	R	Wireless probe 1: Low battery level alarm	
64	Alrm_WirelessPrb_2_LowBatt.Active	R	Wireless probe 2: Low battery level alarm	
65	Alrm_WirelessPrb_3_LowBatt.Active	R	Wireless probe 3: Low battery level alarm	
66	Alrm_WirelessPrb_4_LowBatt.Active	R	Wireless probe 4: Low battery level alarm	
67	Alrm_WirelessPrb_Main.Active	R	Wireless probe fault (main group)	
68	Alrm_WirelessPrb_Limit.Active	R	Wireless probe fault (limit group)	
69	SchedDayCfg[0].EnTB	RW	Scheduler: Enable band 1	Scheduler
70	SchedDayCfg[1].EnTB	RW	Scheduler: Enable band 2	
71	SchedDayCfg[2].EnTB	RW	Scheduler: Enable band 3	
72	SchedDayCfg[3].EnTB	RW	Scheduler: Enable band 4	
73	SchedDayCfg[4].EnTB	RW	Scheduler: Enable band 5	
74	SchedDayCfg[5].EnTB	RW	Scheduler: Enable band 6	

Tab. 11.d

Note: for existing supervisors, a table has been created for backward compatibility, contact Carel for the list (Carel retro).

11.2.2 Table of ModBus variables

Below are the variables used by the Modbus protocol.

INPUT REGISTERS

Variable	Variable name	Occup.	Description	Category
1	SV_SWVer	1	Software version	Unit info
2	SV_OSVer	1	OS version	
3	UnitModel	1	Model version	
4	MainPrb	2	Main probe value (REAL)	I/O
6	LimitPrb	2	Limit probe/second probe value (REAL)	
8	PreheatPrb	2	NTC preheating probe value (REAL)	
10	Conductivity	1	Conductivity	
11	WirelessPrbVal_1.Hum	2	Wireless probe 1: Humidity	Wireless probes read
13	WirelessPrbVal_1.Temp	2	Wireless probe 1: Temperature	
15	WirelessPrbInfo_1.BattLev	1	Wireless probe 1: battery level	
16	WirelessPrbInfo_1.RadioSignalLev	1	Wireless probe 1: wireless signal level	
17	WirelessPrbVal_2.Hum	2	Wireless probe 2: Humidity	
19	WirelessPrbVal_2.Temp	2	Wireless probe 2: Temperature	
21	WirelessPrbInfo_2.BattLev	1	Wireless probe 2: battery level	
22	WirelessPrbInfo_2.RadioSignalLev	1	Wireless probe 2: wireless signal level	
23	WirelessPrbVal_3.Hum	2	Wireless probe 3: Humidity	
25	WirelessPrbVal_3.Temp	2	Wireless probe 3: Temperature	
27	WirelessPrbInfo_3.BattLev	1	Wireless probe 3: battery level	
28	WirelessPrbInfo_3.RadioSignalLev	1	Wireless probe 3: wireless signal level	
29	WirelessPrbVal_4.Hum	2	Wireless probe 4: Humidity	
31	WirelessPrbVal_4.Temp	2	Wireless probe 4: Temperature	
33	WirelessPrbInfo_4.BattLev	1	Wireless probe 4: battery level	
34	WirelessPrbInfo_4.RadioSignalLev	1	Wireless probe 4: wireless signal level	
35	UnitStatus	1	Unit status	Unit status
36	CurrProdPh	2	Current production in kg/h (lbs/h)	
38	WorkHr	2	Unit operating hours	
40	CylWorkHr	2	Cylinder operating hours	
42	NetReq	2	Current system request	Network feedback
44	NetProd	2	Current system production	
46	NetStatus[1]	1	Unit 1 status	
47	NetStatus[2]	1	Unit 2 status	
48	NetStatus[3]	1	Unit 3 status	
49	NetStatus[4]	1	Unit 4 status	
50	NetStatus[5]	1	Unit 5 status	
51	NetStatus[6]	1	Unit 6 status	
52	NetStatus[7]	1	Unit 7 status	
53	NetStatus[8]	1	Unit 8 status	
54	NetStatus[9]	1	Unit 9 status	
55	NetStatus[10]	1	Unit 10 status	
56	NetStatus[11]	1	Unit 11 status	
57	NetStatus[12]	1	Unit 12 status	
58	NetStatus[13]	1	Unit 13 status	
59	NetStatus[14]	1	Unit 14 status	
60	NetStatus[15]	1	Unit 15 status	
61	NetStatus[16]	1	Unit 16 status	Network feedback
62	NetStatus[17]	1	Unit 17 status	
63	NetStatus[18]	1	Unit 18 status	
64	NetStatus[19]	1	Unit 19 status	
65	NetStatus[20]	1	Unit 20 status	
106	SV_CommandResult	1	1: successful, 2: failed, 3: invalid command	Comm

Tab. 11.e

HOLDING REGISTERS

Variable	Variable name	Occup.	Description	Category
1	SV_PwrReq	2	Production request percentage from supervisor	Unit st.
8	RegulationCfg.RegTyp	1	Control type	Regulation
9	GlbSetP_Hum	2	Humidity control set point	
11	GlbSetP_Temp	2	Temperature control set point	
13	RegulationCfg.Hyst	2	Control hysteresis	
15	RegulationCfg.Diff	2	Control differential	
17	GlbSetPLim_Hum	2	Set point limit for humidity control	
19	GlbSetPLim_Temp	2	Set point limit for temperature control	
21	RegulationCfg.DiffLim	2	Limit differential	
23	RegulationCfg.MinReq	2	Minimum production	
25	AlrmThrshHumLo	2	Low humidity alarm threshold	Alarm thresholds
27	AlrmThrshHumHi	2	High humidity alarm threshold	
29	AlrmThrshHumHiLim	2	High humidity limit alarm threshold	
31	AlrmThrshTempLo	2	Low temperature alarm threshold	
33	AlrmThrshTempHi	2	High temperature alarm threshold	
35	AlrmThrshTempHiLim	2	High temperature limit alarm threshold	
37	ThrshAlrmDT	1	High humidity/temperature alarm delay	
38	MainPrbCfg.Typ	1	Main probe type	Probes cfg
39	MainPrbCfg.Mi_Hum	2	Main probe minimum humidity value	
41	MainPrbCfg.Ma_Hum	2	Main probe maximum humidity value	
43	MainPrbCfg.Mi_Temp	2	Main probe minimum temperature value	
45	MainPrbCfg.Ma_Temp	2	Main probe maximum temperature value	
47	LimitPrbCfg.Typ	1	Limit probe type	
48	LimitPrbCfg.Mi_Hum	2	Limit probe minimum humidity value	
50	LimitPrbCfg.Ma_Hum	2	Limit probe maximum humidity value	
52	LimitPrbCfg.Mi_Temp	2	Limit probe minimum temperature value	
54	LimitPrbCfg.Ma_Temp	2	Limit probe maximum temperature value	
56	WHardnessMan	1	Manual water hardness value (if WHardnessTyp is TRUE)	Unit cfg
57	EvapCycleNoThrshsh	1	Number of evaporation cycles (0=auto)	
58	FillTScale	1	Variation in fill time	
59	DilDrainTScale	1	Variation in drain time	
60	RegulationCfg.PwrCorrectionFactor	2	Power correction for thermal dissipation	

Variable	Variable name	Occup.	Description	Category
62	Scheduler.SchedDayToSet	1	When >0, day of the week to be configured (1=Monday, 7=Sunday)	Scheduler setting
63	SchedDayCfg[0].StartHr	1	Band 1 start hours	
64	SchedDayCfg[0].StartMin	1	Band 1 start minutes	
65	SchedDayCfg[0].WorkMode	1	Band 1 operating mode	
66	SchedDayCfg[0].SetP	2	Band 1 set point	
68	SchedDayCfg[1].StartHr	1	Band 2 start hours	
69	SchedDayCfg[1].StartMin	1	Band 2 start minutes	
70	SchedDayCfg[1].WorkMode	1	Band 2 operating mode	
71	SchedDayCfg[1].SetP	2	Band 2 set point	
73	SchedDayCfg[2].StartHr	1	Band 3 start hours	
74	SchedDayCfg[2].StartMin	1	Band 3 start minutes	
75	SchedDayCfg[2].WorkMode	1	Band 3 operating mode	
76	SchedDayCfg[2].SetP	2	Band 3 set point	
78	SchedDayCfg[3].StartHr	1	Band 4 start hours	
79	SchedDayCfg[3].StartMin	1	Band 4 start minutes	
80	SchedDayCfg[3].WorkMode	1	Band 4 operating mode	
81	SchedDayCfg[3].SetP	2	Band 4 set point	
83	SchedDayCfg[4].StartHr	1	Band 5 start hours	
84	SchedDayCfg[4].StartMin	1	Band 5 start minutes	
85	SchedDayCfg[4].WorkMode	1	Band 5 operating mode	
86	SchedDayCfg[4].SetP	2	Band 5 set point	
88	SchedDayCfg[5].StartHr	1	Band 6 start hours	
89	SchedDayCfg[5].StartMin	1	Band 6 start minutes	
90	SchedDayCfg[5].WorkMode	1	Band 6 operating mode	
91	SchedDayCfg[5].SetP	2	Band 6 set point	
93	UoM	1	Unit of measure	UoM
94	Year	1	Year	Clock
95	Month	1	Month	
96	Day	1	Day	
97	Hour	1	Hour	
98	Minute	1	Minutes	
99	SetTimezone	1	Time zone	
100	SV_Command	1	1: reset alarms, 2: reset hour counter	Comm

Tab. 11.f

INPUT STATUS

Variable	Variable name	Occup.	Description	Category
1	RemOn	1	Remote on/off	I/O
2	ThermPtcDin	1	Thermal DIN status	
3	LevSenStatus.Low	1	Level sensor: low level	
4	LevSenStatus.Hi	1	Level sensor: high level	
5	LevSenStatus.Foam	1	High level sensor: foam	
6	OnOffStatus	1	Unit status On or OFF	On/Off
7	PreMainWarn	1	Maintenance pre-alert (not an alarm)	Alarms
8	CurrBlkAlrm.IsBlocker	1	Shutdown alarm	
9	CurrBlkAlrm.IsPresent	1	Resettable alarm	
10	CurrBlkAlrm.Warning	1	Warning	
11	Alrm_Autotest.Active	1	Autotest alarm	
12	Alrm_HighConductAl.Active	1	High conductivity alarm	
13	Alrm_LevSen.Active	1	Level sensor broken alarm	
14	Alrm_ThermPtc.Active	1	Thermal overload alarm	
15	Alrm_Wmiss.Active	1	No water alarm	
16	Alrm_LowProd.Active	1	Low production alarm	
17	Alrm_MainPrb.Active	1	Main probe fault alarm	
18	Alrm_LimPrb.Active	1	Limit probe fault alarm	
19	Alrm_PreHPrb.Active	1	NTC preheating probe fault alarm	
20	Alrm_HiHum.Active	1	High humidity alarm	
21	Alrm_LoHum.Active	1	Low humidity alarm	
22	Alrm_HiHumLim.Active	1	High humidity limit alarm	
23	Alrm_Foam.Active	1	Foam alarm	
24	Alrm_PeriodicMaint.Active	1	Periodical maintenance request	
25	Alrm_CylFull.Active	1	Cylinder full alarm	
26	Alrm_ConductPrb.Active	1	Conductivity probe fault alarm	
27	Alrm_HighConductWr.Active	1	High conductivity warning	
28	Alrm_RetMem.Active	1	Retain memory damaged warning	
29	Warn_Autotest.Active	1	Autotest warning	
30	Warn_LevSen.Active	1	Level sensor warning	
31	Warn_LowProd.Active	1	Low production warning	
32	Alrm_WirelessPrb_1_Offline.Active	1	Wireless probe 1 offline	
33	Alrm_WirelessPrb_2_Offline.Active	1	Wireless probe 2 offline	
34	Alrm_WirelessPrb_3_Offline.Active	1	Wireless probe 3 offline	
35	Alrm_WirelessPrb_4_Offline.Active	1	Wireless probe 4 offline	
36	Alrm_MissingModel.Active	1	Model not configured	
37	Alrm_NetUnit_1.Active	1	Active alarm on unit 1	
38	Alrm_NetUnit_2.Active	1	Active alarm on unit 2	
39	Alrm_NetUnit_3.Active	1	Active alarm on unit 3	
40	Alrm_NetUnit_4.Active	1	Active alarm on unit 4	
41	Alrm_NetUnit_5.Active	1	Active alarm on unit 5	
42	Alrm_NetUnit_6.Active	1	Active alarm on unit 6	
43	Alrm_NetUnit_7.Active	1	Active alarm on unit 7	
44	Alrm_NetUnit_8.Active	1	Active alarm on unit 8	
45	Alrm_NetUnit_9.Active	1	Active alarm on unit 9	
46	Alrm_NetUnit_10.Active	1	Active alarm on unit 10	
47	Alrm_NetUnit_11.Active	1	Active alarm on unit 11	
48	Alrm_NetUnit_12.Active	1	Active alarm on unit 12	
49	Alrm_NetUnit_13.Active	1	Active alarm on unit 13	
50	Alrm_NetUnit_14.Active	1	Active alarm on unit 14	
51	Alrm_NetUnit_15.Active	1	Active alarm on unit 15	
52	Alrm_NetUnit_16.Active	1	Active alarm on unit 16	
53	Alrm_NetUnit_17.Active	1	Active alarm on unit 17	
54	Alrm_NetUnit_18.Active	1	Active alarm on unit 18	

Variable	Variable name	Occup.	Description	Category
55	Alrm_NetUnit_19.Active	1	Active alarm on unit 19	Alarms
56	Alrm_NetUnit_20.Active	1	Active alarm on unit 20	
57	Alrm_WirelessPrb_1_LowBatt.Active	1	Wireless probe 1: Low battery level alarm	
58	Alrm_WirelessPrb_2_LowBatt.Active	1	Wireless probe 2: Low battery level alarm	
59	Alrm_WirelessPrb_3_LowBatt.Active	1	Wireless probe 3: Low battery level alarm	
60	Alrm_WirelessPrb_4_LowBatt.Active	1	Wireless probe 4: Low battery level alarm	
61	Alrm_WirelessPrb_Main.Active	1	Wireless probe fault (main group)	
62	Alrm_WirelessPrb_Limit.Active	1	Wireless probe fault (limit group)	

Tab. 11.g

COIL STATUS

Variable	Variable name	Occup.	Description	Category
1	OnBySV	1	Start command from SV (Supervisor)	On/Off
7	SchedDayCfg[0].EnTB	1	Scheduler: Enable band 1	Scheduler
8	SchedDayCfg[1].EnTB	1	Scheduler: Enable band 2	
9	SchedDayCfg[2].EnTB	1	Scheduler: Enable band 3	
10	SchedDayCfg[3].EnTB	1	Scheduler: Enable band 4	
11	SchedDayCfg[4].EnTB	1	Scheduler: Enable band 5	
12	SchedDayCfg[5].EnTB	1	Scheduler: Enable band 6	

Tab. 11.h

11.2.3 Table of BACnet variables

Below are the variables used by the BACnet protocol.

Positive Integer Values

Variable	Variable name	Access	Description	Category
0	SV_SWVer	R	Software version	Unit info
1	SV_OSVer	R	OS version	
2	UnitModel	R	Model version	
3	Conductivity	R	Conductivity	Inputs
4	WirelessPrbInfo_1.BattLev	R	Wireless probe 1: battery level	Wireless probes
5	WirelessPrbInfo_1.RadioSignalLev	R	Wireless probe 1: wireless signal level	
6	WirelessPrbInfo_2.BattLev	R	Wireless probe 2: battery level	
7	WirelessPrbInfo_2.RadioSignalLev	R	Wireless probe 2: wireless signal level	
8	WirelessPrbInfo_3.BattLev	R	Wireless probe 3: battery level	
9	WirelessPrbInfo_3.RadioSignalLev	R	Wireless probe 3: wireless signal level	
10	WirelessPrbInfo_4.BattLev	R	Wireless probe 4: battery level	
11	WirelessPrbInfo_4.RadioSignalLev	R	Wireless probe 4: wireless signal level	
12	UnitStatus	R	Unit status	Unit status
13	WorkHr	R	Unit operating hours	
14	CylWorkHr	R	Cylinder operating hours	
15	ManMode	RW	Manual mode (1=outputs, 2=request)	Manual
16	ManSSR_OpT	RW	SSR opening time (manual mode)	
17	ManSSR_CIT	RW	SSR closing time (manual mode)	
18	RegulationCfg.RegTyp	RW	Control type	Reg cfg
19	ThrshAlrmDT	RW	High humidity/temperature alarm delay	Alrm thr.
20	MainPrbCfg.Typ	RW	Main probe type	IO cfg
21	LimitPrbCfg.Typ	RW	Limit probe type	
22	WHardnessMan	RW	Manual water hardness value (if WHardnessTyp is TRUE)	Unit cfg
23	EvapCycleNoThrshsh	RW	Number of evaporation cycles (0=auto)	
24	FillTScale	RW	Variation in fill time	
25	DilDrainTScale	RW	Variation in drain time	
26	Scheduler.SchedDayToSet	RW	When >0, day of the week to be configured (1=Monday, 7=Sunday)	Scheduler
27	SchedDayCfg[0].StartHr	RW	Band 1 start hours	
28	SchedDayCfg[0].StartMin	RW	Band 1 start minutes	
29	SchedDayCfg[0].WorkMode	RW	Band 1 operating mode	
30	SchedDayCfg[1].StartHr	RW	Band 2 start hours	
31	SchedDayCfg[1].StartMin	RW	Band 2 start minutes	
32	SchedDayCfg[1].WorkMode	RW	Band 2 operating mode	
33	SchedDayCfg[2].StartHr	RW	Band 3 start hours	
34	SchedDayCfg[2].StartMin	RW	Band 3 start minutes	
35	SchedDayCfg[2].WorkMode	RW	Band 3 operating mode	
36	SchedDayCfg[3].StartHr	RW	Band 4 start hours	
37	SchedDayCfg[3].StartMin	RW	Band 4 start minutes	
38	SchedDayCfg[3].WorkMode	RW	Band 4 operating mode	
39	SchedDayCfg[4].StartHr	RW	Band 5 start hours	
40	SchedDayCfg[4].StartMin	RW	Band 5 start minutes	
41	SchedDayCfg[4].WorkMode	RW	Band 5 operating mode	
42	SchedDayCfg[5].StartHr	RW	Band 6 start hours	
43	SchedDayCfg[5].StartMin	RW	Band 6 start minutes	
44	SchedDayCfg[5].WorkMode	RW	Band 6 operating mode	
45	UoM	RW	Unit of measure	UoM
46	Year	RW	Year	Clock
47	Month	RW	Month	
48	Day	RW	Day	
49	Hour	RW	Hour	
50	Minute	RW	Minutes	
51	SetTimezone	RW	Time zone	

Variable	Variable name	Access	Description	Category
52	NetStatus[1]	R	Unit 1 status	Network
53	NetStatus[2]	R	Unit 2 status	
54	NetStatus[3]	R	Unit 3 status	
55	NetStatus[4]	R	Unit 4 status	
56	NetStatus[5]	R	Unit 5 status	
57	NetStatus[6]	R	Unit 6 status	
58	NetStatus[7]	R	Unit 7 status	
59	NetStatus[8]	R	Unit 8 status	
60	NetStatus[9]	R	Unit 9 status	
61	NetStatus[10]	R	Unit 10 status	
62	NetStatus[11]	R	Unit 11 status	
63	NetStatus[12]	R	Unit 12 status	
64	NetStatus[13]	R	Unit 13 status	
65	NetStatus[14]	R	Unit 14 status	
66	NetStatus[15]	R	Unit 15 status	
67	NetStatus[16]	R	Unit 16 status	
68	NetStatus[17]	R	Unit 17 status	
69	NetStatus[18]	R	Unit 18 status	
70	NetStatus[19]	R	Unit 19 status	
71	NetStatus[20]	R	Unit 20 status	
92	SV_Command	RW	1: reset alarms, 2: reset hour counter	Comm
93	SV_CommandResult	R	1: successful, 2: failed, 3: invalid command	

Tab. 11.a

Analog values

Variable	Variable name	Access	Description	Category
0	MainPrb	R	Main probe value (REAL)	Inputs
1	LimitPrb	R	Limit probe/second probe value (REAL)	
2	PreheatPrb	R	NTC preheating probe value (REAL)	
3	WirelessPrbVal_1.Hum	R	Wireless probe 1: Humidity	Wireless probes
4	WirelessPrbVal_1.Temp	R	Wireless probe 1: Temperature	
5	WirelessPrbVal_2.Hum	R	Wireless probe 2: Humidity	
6	WirelessPrbVal_2.Temp	R	Wireless probe 2: Temperature	
7	WirelessPrbVal_3.Hum	R	Wireless probe 3: Humidity	
8	WirelessPrbVal_3.Temp	R	Wireless probe 3: Temperature	
9	WirelessPrbVal_4.Hum	R	Wireless probe 4: Humidity	
10	WirelessPrbVal_4.Temp	R	Wireless probe 4: Temperature	
11	SV_PwrReq	RW	Production request percentage from supervisor	Unit status
12	CurrProdPh	R	Current production in kg/h (lbs/h)	
13	ManReq	RW	Manual request	Manual
14	GlbSetP_Hum	RW	Humidity control set point	Regulation
15	GlbSetP_Temp	RW	Temperature control set point	
16	RegulationCfg.Hyst	RW	Control hysteresis	
17	RegulationCfg.Diff	RW	Control differential	
18	GlbSetPLim_Hum	RW	Set point limit for humidity control	
19	GlbSetPLim_Temp	RW	Set point limit for temperature control	
20	RegulationCfg.DiffLim	RW	Limit differential	
21	RegulationCfg.MinReq	RW	Minimum production	
22	AlrmThrshHumLo	RW	Low humidity alarm threshold	Alarm threshold
23	AlrmThrshHumHi	RW	High humidity alarm threshold	
24	AlrmThrshHumHiLim	RW	High humidity limit alarm threshold	
25	AlrmThrshTempLo	RW	Low temperature alarm threshold	
26	AlrmThrshTempHi	RW	High temperature alarm threshold	
27	AlrmThrshTempHiLim	RW	High temperature limit alarm threshold	
28	MainPrbCfg.Mi_Hum	RW	Main probe minimum humidity value	IO cfg
29	MainPrbCfg.Ma_Hum	RW	Main probe maximum humidity value	
30	MainPrbCfg.Mi_Temp	RW	Main probe minimum temperature value	
31	MainPrbCfg.Ma_Temp	RW	Main probe maximum temperature value	
32	LimitPrbCfg.Mi_Hum	RW	Limit probe minimum humidity value	
33	LimitPrbCfg.Ma_Hum	RW	Limit probe maximum humidity value	
34	LimitPrbCfg.Mi_Temp	RW	Limit probe minimum temperature value	
35	LimitPrbCfg.Ma_Temp	RW	Limit probe maximum temperature value	
36	RegulationCfg.PwrCorrectionFactor	RW	Power correction for thermal dissipation	Unit cfg
37	SchedDayCfg[0].SetP	RW	Band 1 set point	Scheduler
38	SchedDayCfg[1].SetP	RW	Band 2 set point	
39	SchedDayCfg[2].SetP	RW	Band 3 set point	
40	SchedDayCfg[3].SetP	RW	Band 4 set point	
41	SchedDayCfg[4].SetP	RW	Band 5 set point	
42	SchedDayCfg[5].SetP	RW	Band 6 set point	
43	NetReq	R	Current system request	Network feedback
44	NetProd	R	Current system production	

Tab. 11.i

Binary Values

Variable	Variable name	Access	Description	Category
0	RemOn	R	Remote on/off	I/O
1	ThermPtcDin	R	Thermal DIN status	
2	LevSenStatus.Low	R	Level sensor: low level	
3	LevSenStatus.Hi	R	Level sensor: high level	
4	LevSenStatus.Foam	R	High level sensor: foam	
5	OnOffStatus	R	Unit status On or OFF	On/Off
6	OnBySV	RW	Start command from SV (Supervisor)	
12	PreMainWarn	R	Maintenance pre-alert (not an alarm)	Alarms
13	CurrBlkAlrm.IsBlocker	R	Shutdown alarm	
14	CurrBlkAlrm.IsPresent	R	Resettable alarm	
15	CurrBlkAlrm.Warning	R	Warning	
16	Alrm_Autotest.Active	R	Autotest alarm	
17	Alrm_HighConductAl.Active	R	High conductivity alarm	
18	Alrm_LevSen.Active	R	Level sensor broken alarm	
19	Alrm_ThermPtc.Active	R	Thermal overload alarm	
20	Alrm_Wmiss.Active	R	No water alarm	
21	Alrm_LowProd.Active	R	Low production alarm	
22	Alrm_MainPrb.Active	R	Main probe fault alarm	
23	Alrm_LimPrb.Active	R	Limit probe fault alarm	
24	Alrm_PreHPrb.Active	R	NTC preheating probe fault alarm	
25	Alrm_HiHum.Active	R	High humidity alarm	
26	Alrm_LoHum.Active	R	Low humidity alarm	
27	Alrm_HiHumLim.Active	R	High humidity limit alarm	
28	Alrm_Foam.Active	R	Foam alarm	
29	Alrm_PeriodicMaint.Active	R	Periodical maintenance request	
30	Alrm_CylFull.Active	R	Cylinder full alarm	
31	Alrm_ConductPrb.Active	R	Conductivity probe fault alarm	
32	Alrm_HighConductWr.Active	R	High conductivity warning	
33	Alrm_RetMem.Active	R	Retain memory damaged warning	
34	Warn_Autotest.Active	R	Autotest warning	
35	Warn_LevSen.Active	R	Level sensor warning	
36	Warn_LowProd.Active	R	Low production warning	
37	Alrm_WirelessPrb_1_Offline.Active	R	Wireless probe 1 offline	
38	Alrm_WirelessPrb_2_Offline.Active	R	Wireless probe 2 offline	
39	Alrm_WirelessPrb_3_Offline.Active	R	Wireless probe 3 offline	Alarms
40	Alrm_WirelessPrb_4_Offline.Active	R	Wireless probe 4 offline	
41	Alrm_MissingModel.Active	R	Model not configured	
42	Alrm_NetUnit_1.Active	R	Active alarm on unit 1	
43	Alrm_NetUnit_2.Active	R	Active alarm on unit 2	
44	Alrm_NetUnit_3.Active	R	Active alarm on unit 3	
45	Alrm_NetUnit_4.Active	R	Active alarm on unit 4	
46	Alrm_NetUnit_5.Active	R	Active alarm on unit 5	
47	Alrm_NetUnit_6.Active	R	Active alarm on unit 6	
48	Alrm_NetUnit_7.Active	R	Active alarm on unit 7	
49	Alrm_NetUnit_8.Active	R	Active alarm on unit 8	
50	Alrm_NetUnit_9.Active	R	Active alarm on unit 9	
51	Alrm_NetUnit_10.Active	R	Active alarm on unit 10	
52	Alrm_NetUnit_11.Active	R	Active alarm on unit 11	
53	Alrm_NetUnit_12.Active	R	Active alarm on unit 12	
54	Alrm_NetUnit_13.Active	R	Active alarm on unit 13	
55	Alrm_NetUnit_14.Active	R	Active alarm on unit 14	
56	Alrm_NetUnit_15.Active	R	Active alarm on unit 15	
57	Alrm_NetUnit_16.Active	R	Active alarm on unit 16	
58	Alrm_NetUnit_17.Active	R	Active alarm on unit 17	
59	Alrm_NetUnit_18.Active	R	Active alarm on unit 18	
60	Alrm_NetUnit_19.Active	R	Active alarm on unit 19	
61	Alrm_NetUnit_20.Active	R	Active alarm on unit 20	
62	Alrm_WirelessPrb_1_LowBatt.Active	R	Wireless probe 1: Low battery level alarm	
63	Alrm_WirelessPrb_2_LowBatt.Active	R	Wireless probe 2: Low battery level alarm	
64	Alrm_WirelessPrb_3_LowBatt.Active	R	Wireless probe 3: Low battery level alarm	
65	Alrm_WirelessPrb_4_LowBatt.Active	R	Wireless probe 4: Low battery level alarm	
66	Alrm_WirelessPrb_Main.Active	R	Wireless probe fault (main group)	
67	Alrm_WirelessPrb_Limit.Active	R	Wireless probe fault (limit group)	
68	SchedDayCfg[0].EnTB	RW	Scheduler: Enable band 1	Scheduler
69	SchedDayCfg[1].EnTB	RW	Scheduler: Enable band 2	
70	SchedDayCfg[2].EnTB	RW	Scheduler: Enable band 3	
71	SchedDayCfg[3].EnTB	RW	Scheduler: Enable band 4	
72	SchedDayCfg[4].EnTB	RW	Scheduler: Enable band 5	
73	SchedDayCfg[5].EnTB	RW	Scheduler: Enable band 6	

Tab. 11.j

12. WIRELESS PROBES, INSTALLATION AND CONFIGURATION

12.1 Type of installation and wireless probe electrical connections

Wireless probes are available for systems where standard wired probes cannot be used, for example modifications to existing installations. An Access Point (CAREL P/N: WS01AB2M20) is used to connect up to four wireless probes.

Recommended Carel wireless probes are the room (WS01G01M00) or industrial versions (WS01F01M00), both of which measure humidity and temperature. The type of installation is shown in the figure below (referring to four wireless room probes):

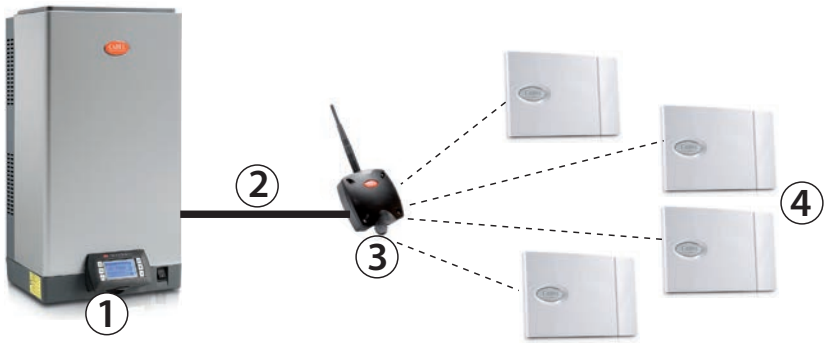

Fig. 12.b

Key:
1. HeaterSteam humidifier;
2. humidifier/Access Point connection;
3. Access Point (WS01AB2M20);
4. Wireless probes for measuring temperature and humidity (WS01G01M00 or WS01F01M00).

HeaterSteam/Access point connection:
To connect the humidifier to the access point, use the Fieldbus connection on terminal M3 (M3.1: Tx/Rx-, M3.2: Tx/Rx+, M3.3: GND):

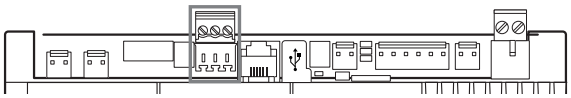

Note: the devices have a range of around a hundred metres in a free space, i.e. without any obstacles. In a closed space, the range varies considerably depending on the type of environment and the surrounding objects (shelves, metal partition walls etc.).

If installing multiple wireless probes, the controller will calculate the weighted average between the various probe readings, depending on the settings made by the user and the defined probe groups. Also see paragraph 7.4.3 Wireless probes. The controller also displays (locally only) the battery and signal level for each probe (screen index D05-D08).

The table below shows the part numbers and descriptions of the Carel devices that can be used:

P/N		Model	Features	Power supply
WS01F01M00		SI Probe	Temperature/ humidity for industrial use	Battery
WS01G01M00		SA probe	Room temperature/ humidity	Battery
WS01AB2M20		Access Point	Wireless gate-way ZigBee™ – RS485 ModBus	12/24 Vac/dc ±10% 100 mA; 50/60 Hz; Use a Class II safety transformer with minimum power rating of 2 VA. A 12 Vac transformer is recommended

Tab. 12.k

12.2 Wireless probe installation

The main steps for installing the wireless devices are:
- power up the Access Point (12/24 Vac/dc ±10%m, 100mA) and complete the initialisation procedure, creating the network and selecting the channel;
- after having opened the domain on the Access Point, complete the binding procedure so as to uniquely identify each probe.

The address to be used by the Access Point is set using the dipswitches on the device, and is the following:

Dipswitch				Access Point add.	Serial port baud rate (Bit/S) N82
1	2	3	4		
OFF	ON	OFF	ON	2	19200

Fig. 12.c

This assigns the address 2 to the Access Point, with a baud rate (Bit/sec) of 19200 (N82). The addresses of the four serial probes, on the other hand, must be set as shown in the table below:

	Address	Dipswitch							
		1	2	3	4	5	6	7	8
Probe 1	16	0	0	0	0	1	0	0	0
Probe 2	17	1	0	0	0	1	0	0	0
Probe 3	18	0	1	0	0	1	0	0	0
Probe 4	19	1	1	0	0	1	0	0	0

Tab. 12.l

Remember to verify the quality of the wireless signal between the Access Point and each wireless probe.

For a complete description of the installation procedure, see the Carel manual on the corresponding probes and Access Point.

To configure the probes, go the screens: Ec03, Ec04, Ec05, Ec06 and Ec07, described in paragraph 7.4.3 "Wireless probes".

In particular, screen Ec03 is used to enable the wireless probes connected to the Access Point, knowing that addresses 16, 17, 18 and 19 are Probe 1, Probe 2, Probe 3 and Probe 4 respectively.

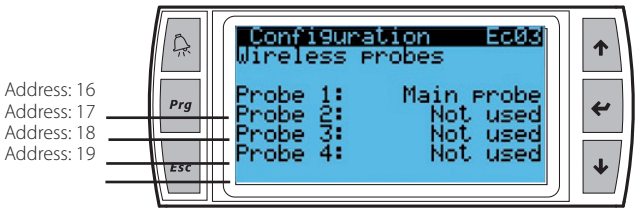

Note: the wireless probes are managed on the heaterSteam titanium version.

13. ALARM TABLE

The following table shows the alarms that can be displayed by the controller, with the corresponding description, causes and possible solutions.

Code	Alarm	Cause	Possible solution	Reset	Alarm relay	Action
ALC01	Autotest failed alarm	Probable problems with: feedwater, level control, fill solenoid valve Note: check the alarm log for any warnings relating to the events that generated the alarm (autotest warning, level sensor warning, low production warning)	Make sure that the unit receives water Switch the unit off and clean the level control and the fill valve	Restart required	Closed	Total shutdown
ALC02	High conductivity warning	High water conductivity warning	Check feedwater conductivity If necessary, feature a suitable water treatment system The problem cannot be solved by softening the feedwater	Manually reset the warning	Open	Signal only
ALW03	High conductivity alarm	High feedwater conductivity alarm	Switch the unit off and clean the electrodes that measure the water conductivity If the problem persists, change the origin of the feedwater or feature a suitable treatment system (demineralisation, even partial) The problem cannot be solved by softening the feedwater		Restart required	Closed
ALC03	Level sensor malfunction alarm	The level sensor may not be working correctly	Switch the unit off and clean the cylinder, the level sensor and the fill solenoid valve Check correct water supply to the cylinder	Restart required	Closed	Total shutdown
ALC04	High heater temperature	The PTC probes in the heaters have measured an excess temperature Klixon activated	Manually reset the Klixon The problem depends on operation without water or excessive scale on the surface of the heaters Switch the unit off and, when it has cooled down, clean the cylinder, the heaters and the level control, making sure the components are intact Check that the electrical and water connections are in order and that the unit is powered correctly It may be necessary to replace the PTC sensors	Stop - restart required	Closed	Total shutdown
ALB01	No water alarm	No feedwater	Check that the supply pipe to the humidifier and the internal tubing are not blocked or choked and that there is enough pressure (0.1-0.8 MPa, 1-8 bars) Check operation of the fill solenoid valve Check that there is not excessive back-pressure in the steam outlet, preventing water from entering the cylinder due to gravity Check that the steam outlet pipe is not choked or that there are no pockets of condensate Check that the level sensor is working correctly, clean if necessary	Manual/ Automatic	Closed	Stop production
ALB02	Low production alarm	Input power not available; with the unit on, there is no steam production or water preheating; Float blocked in high level position.	With the unit off and disconnected from the mains power supply, check that there are no defective or faulty electrical connections Check electrical continuity of the heaters Clean the level sensor	Manual	Closed	Stop production
ALA01	Main probe broken or disconnected alarm	Main room probe not connected or damaged	Check probe connection and the type of control selected	Manual	Closed	Stop production
ALA02	Limit probe broken or disconnected alarm	Limit probe or second probe not connected or damaged	Check probe connection and the type of control selected the type of control choice	Manual	Closed	Stop production
ALA03	Pre-heating probe broken or disconnected alarm	NTC water temperature probe not connected or damaged	Check preheating operation and the settings of the parameters on screen eb02;	Automatic	Closed	Stop production
ALH01	High humidity/ temperature warning	High humidity in the room (high temperature with temperature control)	Check operation of the probe and the limits set on screen c01	Automatic	Open	Signal only
ALH02	Low humidity warning	Low humidity in the room	Check operation of the probe and the limits set on screen c01	Automatic	Open	Signal only
ALH03	High limit humidity warning	High humidity at outlet	Check the operation of the outlet limit probe	Automatic	Open	Signal only
ALW01	Foam warning	Entrainment of foam in the cylinder during boiling	The entrainment of foam is generally due to the presence of surfactants in the water (lubricants, solvents, detergents, water treatment or softening agents) or an excessive concentration of dissolved salts. Purge the feedwater lines Clean the cylinder	Automatic	Open	Signal only

Code	Alarm	Cause	Possible solution	Reset	Alarm relay	Action
ALT01	Maintenance pre-alert	Planned maintenance reminder	Stop the unit and carry out complete maintenance on the humidifier, then reset the "cylinder operating hours" counter (screen ea07)	Automatic (reset operating hours)	Open	Signal only. Shutdown unit in relation of the water hardness.
ALW02	Cylinder full warning	Cylinder full of water to the high level sensor on the cover, without humidification request	Check the fill valve for leaks Check whether the high level sensor is dirty Check that there is no condensate return along the steam pipe	Automatic	Open	Signal only
ALA04	Conductivity meter warning	Conductivity meter not connected or damaged	Check the connection of the conductivity meter for measuring feedwater conductivity	Manual	Open	Stop production
ALR01	Controller memory damaged warning	Problem in the electronic controller	Replace the controller	Automatic	Open	Signal only
ALP01	Wireless probe 1 offline	No communication with probe 1	Check binding between probe and access point, check the battery. Check the probe signal level.	Automatic	Closed	Signal only
ALP02	Wireless probe 2 offline	No communication with probe 2	Check binding between probe and access point, check the battery. Check the probe signal level.	Automatic	Closed	Signal only
ALP03	Wireless probe 3 offline	No communication with probe 3	Check binding between probe and access point, check the battery. Check the probe signal level.	Automatic	Closed	Signal only
ALP04	Wireless probe 4 offline	No communication with probe 4	Check binding between probe and access point, check the battery. Check the probe signal level.	Automatic	Closed	Signal only
ALM01	No model	Model not set	Set a model	Automatic when is selected the model	Closed	Stop production
ALM01	Network alarm on unit 1	Network unit alarm (see the specified unit for details)	Carry out the checks based on the alarm displayed on the unit in question	Automatic	Open	Signal only
ALM02	Network alarm on unit 2	Network unit alarm (see the specified unit for details)	Carry out the checks based on the alarm displayed on the unit in question	Automatic	Open	Signal only
ALM03	Network alarm on unit 3	Network unit alarm (see the specified unit for details)	Carry out the checks based on the alarm displayed on the unit in question	Automatic	Open	Signal only
ALM04	Network alarm on unit 4	Network unit alarm (see the specified unit for details)	Carry out the checks based on the alarm displayed on the unit in question	Automatic	Open	Signal only
ALM05	Network alarm on unit 5	Network unit alarm (see the specified unit for details)	Carry out the checks based on the alarm displayed on the unit in question	Automatic	Open	Signal only
ALM06	Network alarm on unit 6	Network unit alarm (see the specified unit for details)	Carry out the checks based on the alarm displayed on the unit in question	Automatic	Open	Signal only
ALM07	Network alarm on unit 7	Network unit alarm (see the specified unit for details)	Carry out the checks based on the alarm displayed on the unit in question	Automatic	Open	Signal only
ALM08	Network alarm on unit 8	Network unit alarm (see the specified unit for details)	Carry out the checks based on the alarm displayed on the unit in question	Automatic	Open	Signal only
ALM09	Network alarm on unit 9	Network unit alarm (see the specified unit for details)	Carry out the checks based on the alarm displayed on the unit in question	Automatic	Open	Signal only
ALM10	Network alarm on unit 10	Network unit alarm (see the specified unit for details)	Carry out the checks based on the alarm displayed on the unit in question	Automatic	Open	Signal only
ALM11	Network alarm on unit 11	Network unit alarm (see the specified unit for details)	Carry out the checks based on the alarm displayed on the unit in question	Automatic	Open	Signal only
ALM12	Network alarm on unit 12	Network unit alarm (see the specified unit for details)	Carry out the checks based on the alarm displayed on the unit in question	Automatic	Open	Signal only
ALM13	Network alarm on unit 13	Network unit alarm (see the specified unit for details)	Carry out the checks based on the alarm displayed on the unit in question	Automatic	Open	Signal only
ALM14	Network alarm on unit 14	Network unit alarm (see the specified unit for details)	Carry out the checks based on the alarm displayed on the unit in question	Automatic	Open	Signal only
ALM15	Network alarm on unit 15	Network unit alarm (see the specified unit for details)	Carry out the checks based on the alarm displayed on the unit in question	Automatic	Open	Signal only
ALM16	Network alarm on unit 16	Network unit alarm (see the specified unit for details)	Carry out the checks based on the alarm displayed on the unit in question	Automatic	Open	Signal only
ALM17	Network alarm on unit 17	Network unit alarm (see the specified unit for details)	Carry out the checks based on the alarm displayed on the unit in question	Automatic	Open	Signal only
ALM18	Network alarm on unit 18	Network unit alarm (see the specified unit for details)	Carry out the checks based on the alarm displayed on the unit in question	Automatic	Open	Signal only
ALM19	Network alarm on unit 19	Network unit alarm (see the specified unit for details)	Carry out the checks based on the alarm displayed on the unit in question	Automatic	Open	Signal only
ALM20	Network alarm on unit 20	Network unit alarm (see the specified unit for details)	Carry out the checks based on the alarm displayed on the unit in question	Automatic	Open	Signal only
ALP05	Wireless probe 1 battery	Battery discharged on wireless probe 1	Check battery charge, replace if necessary;	Automatic	Open	Signal only
ALP06	Wireless probe 2 battery	Battery discharged on wireless probe 2	Check battery charge, replace if necessary;	Automatic	Open	Signal only
ALP07	Wireless probe 3 battery	Battery discharged on wireless probe 3	Check battery charge, replace if necessary;	Automatic	Open	Signal only
ALP08	Wireless probe 4 battery	Battery discharged on wireless probe 4	Check battery charge, replace if necessary;	Automatic	Open	Signal only
ALA05	Main wireless probe group not working	All the main probes wireless are not operate	Check probe connections and binding to the access point	Stop - automatic	Closed	Stop production
ALA06	Limit wireless probe group not working	All the limit probes wireless are not operate	Check probe connections and binding to the access point	Stop - automatic	Closed	Stop production

Tab. 13.a

Tab. 13.a

14. SPARE PARTS AND MAINTENANCE

Exploded view models UR002- UR013

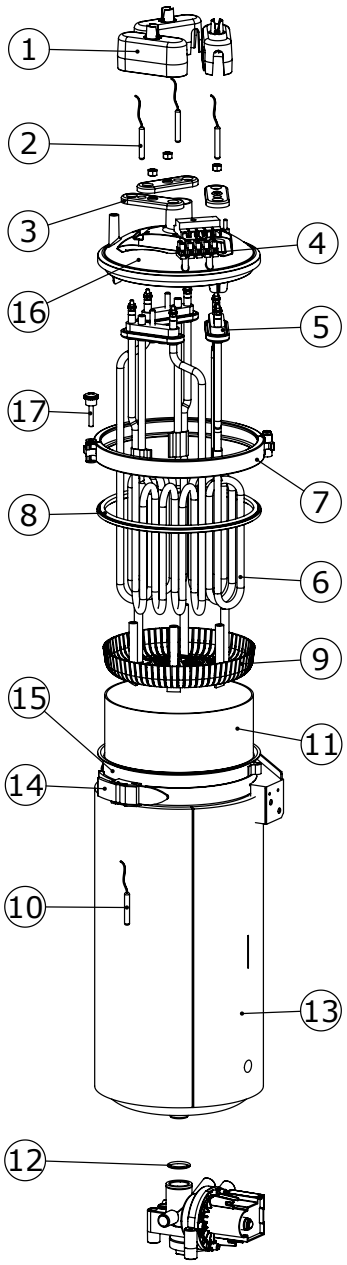

Fig. 14.a

code UR 2	code UR 4	N.	description	no. of kit for single UR UR 2 / UR 4
URKCR00020		1	power connection protection cover (single package)	1
URKCOPC02S		16	boiler cover kit	1
URKPTCS020		2	PTC probe (single package)	1
URKTB00000		4	PTC probe wiring terminal board kit	1
heater kit Titanium (single package)				
208V: URKH03T501	208V: URKH03T503	3	heater counter-flange	1
230V: URKH03T504	230V: URKH03T502	5	heater gasket	
		6	heater	
heater kit Incoloy (single package)				
- -	- -	3	heater counter-flange	1
230V: URKH03I404	230V: URKH03I402	5	heater gasket	
			heater	
URKBR00000		7	cover closure strip	1
water circuit kit				
URKG20000M		8	boiler cover gasket	
		12	drain pump manifold o-ring	
UEKF000020		9	boiler filter kit	1
URKNTC0000		10	NTC probe kit	1
URKB100020		15	steel boiler kit	1
URKBLOCK20		14	boiler fastening bracket	1
URKBAG3000		11	Lime collection bag	1
URKTI10000		13	Boiler thermal cover	1

Tab. 14.a

where not indicated "single package), the kits comprise the quantity of parts needed for the specific machine

code UR 6 - 1~	code UR 6 - 3~	code UR 10 - 3 ~	code UR 13 - 3 ~	N.	description	no. of kit for single UR UR6 1 ~	UR6 3 ~	UR10 3 ~	UR13 3 ~
URKCR00020				1	power connection protective cover (single package)	3			
URKCOPC02M				16	boiler cover kit	1			
URKPTCS020				2	PTC probe (single package)	3			
URKTB00000				4	PTC probe wiring terminal board kit	1			
heater kit Titanium (single package)									
208V: URKH03T504	208V: URKH03T504	208V: URKH03T502	-	3	heater counter-flange	3			
230V: URKH03T501	230V: URKH03T501	230V: URKH03T501	230V: URKH03T502	5	heater gasket				
-	400V: URKH03T501	400V: URKH03T501	400V: URKH03T502						
	460V: URKH03T510	460V: URKH03T504	460V: URKH03T501	6	heater				
	575V: URKH03T511	575V: URKH03T510	575V: URKH03T501						
heater kit Incoloy (single package)									
-	-	-	-	3	heater counter-flange	3			
230V: URKH03I400	230V: URKH03I400	230V: URKH03I401	230V: URKH03I402	5	heater gasket				
-	400V: URKH03I400	400V: URKH03I401	400V: URKH03I402						
	-	460V: URKH03I404	460V: URKH03I401	6	heater				
		-	-						
URKBR00000				7	cover closure strip	1			
water circuit kit									
URKG20000M				8	boiler cover gasket	1			
				12	drain pump manifold o-ring				
UEKF000020				9	boiler filter kit	1			
URKNTC0000				10	NTC probe kit	1			
URKB100020				15	steel boiler kit	1			
URKBLOCK20				14	boiler fastening bracket	1			
URKBAG3000				11	Lime collection bag	1			
URKTI10000				13	Boiler thermal cover	1			

Tab. 14.b

where not indicated "single package", the kits comprise the quantity of parts needed for the specific machine

Exploded view models UR002- UR080

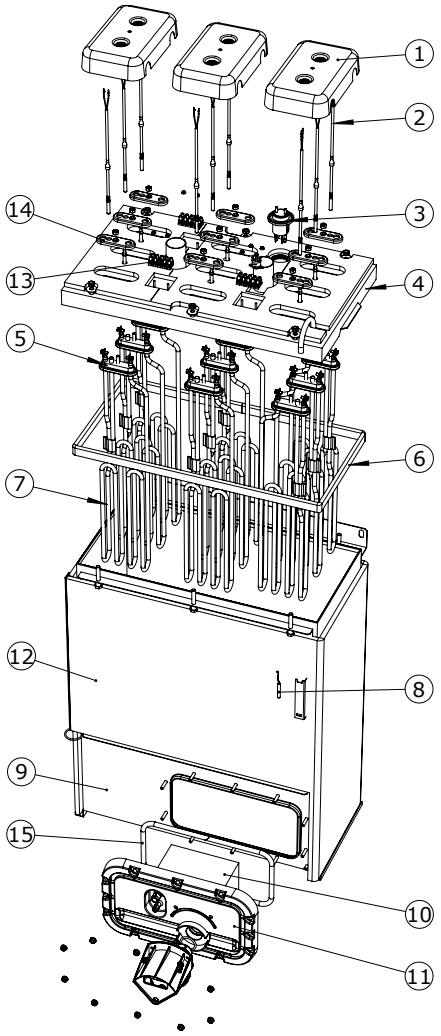

Fig. 14.b

code UR 20	code UR 27	code UR 40	N.	description	no. of kit for single UR UR20	UR27	UR40
URKCR10020			1	power connection protective cover (single package)	3		6
URKCOP3020		URKCOP4020	4	boiler cover	1		1
URKPTCL020			2	PTC probe (single package)	3		6
URKTB00000			13	PTC probe wiring terminal board kit	1		2
heater kit Titanium (single package)							
208V: URKH03T506	-	-	14	heater counter-flange	3		6
230V: URKH03T505	230V: URKH03T506	-	5	heater gasket			
400V: URKH03T505	400V: URKH03T506	400V: URKH03T505					
460V: URKH03T508	460V: URKH03T505	460V: URKH03T508	7	heater			
575V: URKH03T507	575V: URKH03T509	575V: URKH03T507					
heater kit Incoloy (single package)							
-	-	-	14	heater counter-flange	3		6
230V: URKH03I405	230V: URKH03I406	-	5	heater gasket			
400V: URKH03I405	400V: URKH03I406	400V: URKH03I405					
460V: URKH03I408	460V: URKH03I405	460V: URKH03I408	7	heater			
-	-	-					
water circuit kit							
URKG2000XL			6	boiler cover gasket	1		
			15	utilities flage gasket			
URKF0000XL			10	boiler filter kit	1		
URKNTC0000			8	NTC probe kit	1		
URKB400020			9	steel boiler kit	1		
URKTI40000			12	Boiler thermal cover	1		
URKFLAN020			11	kit of utilities flange with gasket	1		
URKFS00000			3	ani-foam sensor kit	1		

Tab. 14.c

where not indicated "(single package)", the kits comprise the quantity of parts needed for the specific machine

code UR 53	code UR 60	code UR 80	N.	description	no. of kit for single UR UR53	UR60	UR80
URKCR10020			1	power connection protective cover (single package)	2	3	
URKCOP5020	URKCOP8020		4	boiler cover	1		
URKPTCL020			2	PTC probe (single package)	6	9	
URKTB00000			13	PTC probe wiring terminal board kit	2	3	
heater kit Titanium (single package)							
400V: URKH03T506	400V: URKH03T505	400V: URKH03T506	14	heater counter-flange	6	9	
460V: URKH03T505	460V: URKH03T508	460V: URKH03T505					
575V: URKH03T509	575V: URKH03T507	575V: URKH03T509	5	heater gasket			
			7	heater			
heater kit Incoloy (single package)							
400V: URKH03I406	400V: URKH03I405	400V: URKH03I406	14	heater counter-flange	6	9	
460V: URKH03I405	460V: URKH03I408	460V: URKH03I405					
-	-	-	5	heater gasket			
			7	heater			
water kit							
URKG200XXL			6	boiler cover gasket	1		
			15	utilities flage gasket			
URKF0000XL			10	boiler filter kit	1		
URKNTC0000			8	NTC probe kit	1		
URKB600020			9	steel boiler kit	1		
URKTI60000			12	Boiler thermal cover	1		
URKFLAN020			11	kit of utilities flange with gasket	1		
URKFS00000			3	ani-foam sensor kit	1		

Tab. 14.d

where not indicated "(single package)", the kits comprise the quantity of parts needed for the specific machine

Other water parts

⚠ **Important warning**: do not use detergents or solvents to clean the plastic components. To remove the deposits use a 20% acetic acid solution, then rinse thoroughly with water.

Water UR 2-13 kg/h

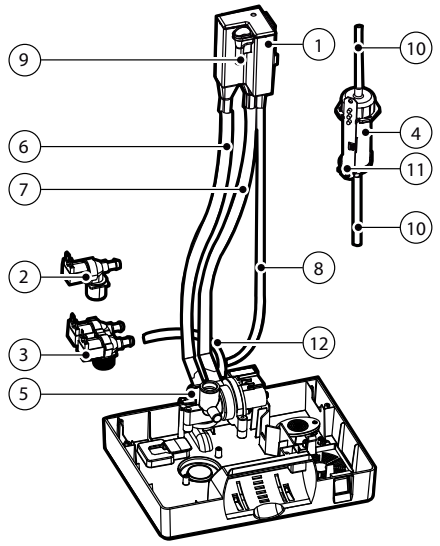

Fig. 14.c

code		position	description
UR 2 - 4	UR 6 - 13		
fill tank kit			
UEKVASC100		1	fill tank
		9	conduction meter
KITFD11211		3	drain tempering solenoid valve (for the models equipped with it)
KITVC10011		2	fill solenoid valve (*)
URKSL00004		4	level control
		10	compensation pipes
		11	cable
URKDRAIN01		5	drain pump
water pipes kit			
URKT00002M		6	drain pipe
		7	overflow pipe
		8	feed pipe
		10	compensation pipes
URKTDT002M (only for drain temperng)	URKTDT002M (only for drain temperng)	12	drain tempering pipe (for the models equipped with it)"

Tab. 14.e

where not indicated "(single package)", the kits comprise the quantity of parts needed for the specific machine
* not available if the unit is drain tempering equipped

Water UR 20-80 kg/h

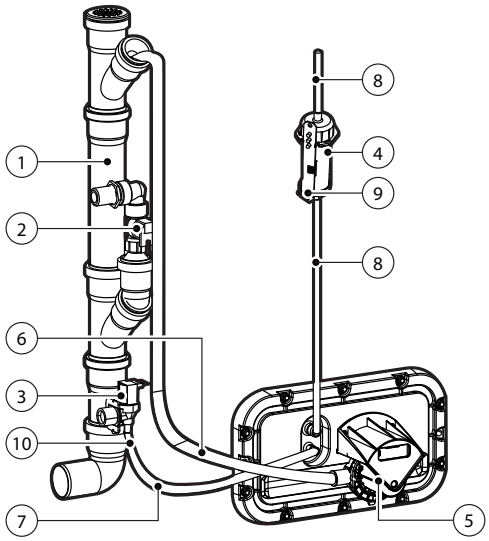

Fig. 14.d

code		position	description
UR 20 - 40	UR 53 - 80		
URKDH00020		1	drain column kit
KITVC00040	KITVC00100	3	fill solenoid valve
URKDTV0000		2	drain tempering solenoid valve (for the models equipped with it)
URKSL00004		4	level control
		8	compensation pipes
		9	cable
URKPS00020		5	drain pump
water pipes kit			
URKT0002XL	URKT002XXL	6	drain pipe
		7	feed pipe
		8	compensation pipe
KITCN00000		10	conduction meter

Tab. 14.f

Electric components

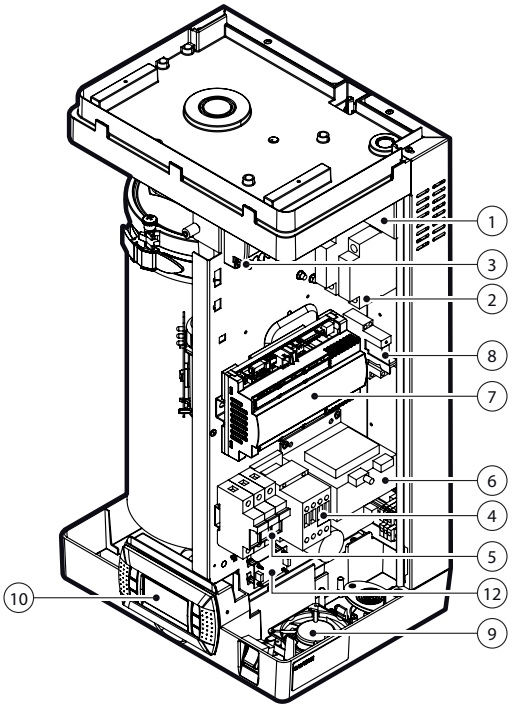

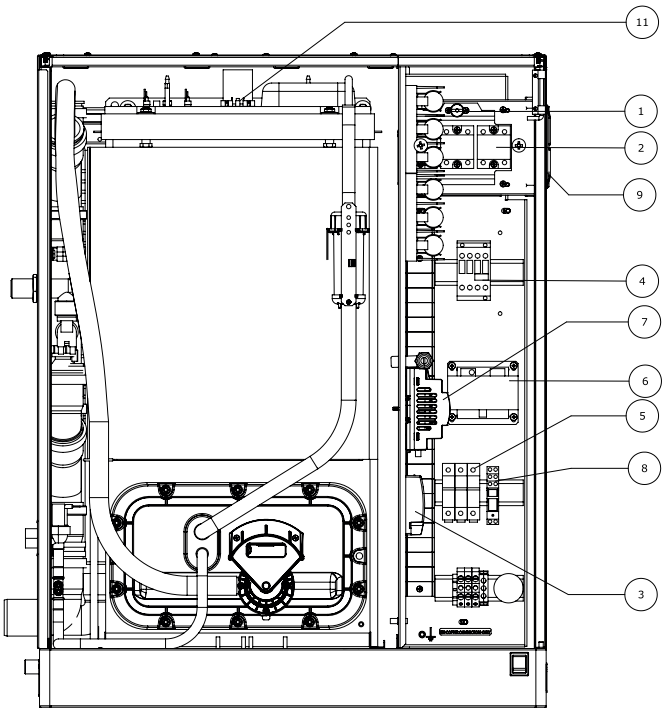

Fig. 14.e

code											N.	description
UR2-10	UR13	UR13	UR20		UR27		UR40		UR53-60	UR80		
ALL	230V 3ph	400-460V 575V 3ph	208-230V 3ph	400-460V 575V 3ph	230V 3ph	400-460V 575V 3ph	400 3ph	460V -575V 3ph	400-460V 575V 3ph	400-460V 575V 3ph		
URKKL20000											1	Thermal protection kit SSR (klixon)
URKSSR1020			URKSSR3000							URKSSR4000	2	Solid state relay (SSR) (single package)
THP00A0000											3	Motor protector (safety thermostat)
URKCONT200	URKCONT200	URKCONT200	URKCONT400	URKCONT200	URKCONT300	URKCONT200	URKCONT400	URKCONT400	URKCONT300	URKCONT300	4	Contactor
URKFH20000			URKFH20000								5	Fuse holder base
UEKTR30000											6	Transformer
heaterSteam process: URH00000P3 - heaterSteam titanium: URH00000T3											7	Main control board
URKREL2400			URKREL2400								8	Pump relay
URKFANS000			URKFANL200								9	Fan
HCT1RHW000			HCT1RHF000								10	Electronic controller
-			URKKL00000								11	Boiler head safety thermostat (klixon)
URKCFAN000			-								12	fan control board

Tab. 14.g

Pump relay URKREL2300 = drain tempering valve relay version 3

14.1 Maintenance

Maintenance interventions on the humidifier should be carried out by CAREL Support Service or by specifically qualified staff.

Important: before proceeding with any operation:

- cut off the power supply setting the master switch of the machine to "OFF";
- close the shut-off valve of the water supply line.
- ON/OFF swithc on the device cuts off power to electronic circuit only, not to other electrical parts!

14.2 Maintenance operations

Routine maintenance of humidifiers using tap water provides:

1. cleaning all the parts that come into contact with water:
   a. fill solenoid valve (and the drain tempering solenoid valve for models where featured);
   b. fill/drain group:
   c. drain pump;
   d. heaters;
   e. feedwater tank (models UR002-UR013), filter and scale collection bag;
   f. level sensor.
2. boiler gasket replacement.

Non-routine maintenance is carried upon every time scheduled maintenance request (code "CL" on display). Therefore, it is necessary to perform complete maintenance of the humidifier and reset the hour counter.

14.3 Maintenance frequency

Maintenance frequency depends on the amount of water and steam generated.

Tap water

Water hardness	15…25 °f	25…40 °f
Daily operating hours	8…10	8…10
No. of maintenance/ year	2	3

Tab. 14.h

Demineralised water

The use of demineralised water minimises maintenances times.

Note: we recommend you carry out non/routine maintenance at least once a year, regardless of the operating hours and the data shown on the hour counter.

14.4 Maintenance of the cylinder-boiler

This operation is necessary as the lime deposits that form inhibit the exchange of heat between the heating elements and the water.

Warning:

- do not use detergents or solvents to clean the components in the boiler and all other plumbing;
- the boiler may be hot! Wait for the boiler to cool down before touching it or use safety gloves.

To access the boiler:
- shut down the device and open the breaker of the power supply line;
- open and remove the front panel (see chapt. 1).
- completely empty the boiler from water (see the "Shutdown" section);

Models UR002-UR013 (refer to the following figures):

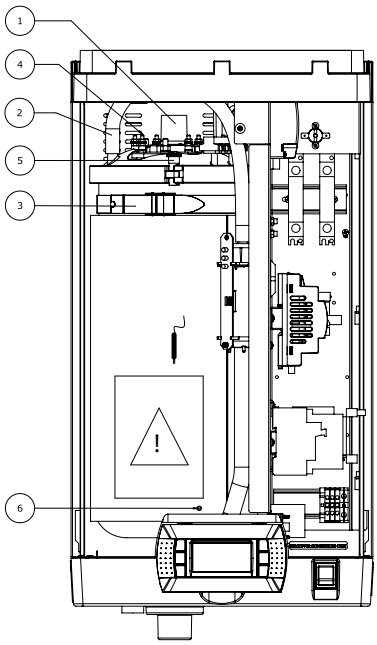

Fig. 14.f

a. loosen the fastening strap and remove the steam pipe (1);
b. from the boiler cover, remove the pressure compensation pipe (2) connected to the level control;
c. loosen the fastening strap (3) and tilt the boiler outwards.
d. remove the heater protection cover (4), loosen the fastening nuts and remove the electrical cables. Also unscrew the screw on the earth wire (6);
e. disconnect the probe connector from the partition;
f. remove the boiler. Place it on a surface resistant to the water;
g. open the cylinder: unscrew the screw and the nut (5);
h. lift the cover that the heaters are fastened to, and remove it from the cylinder;

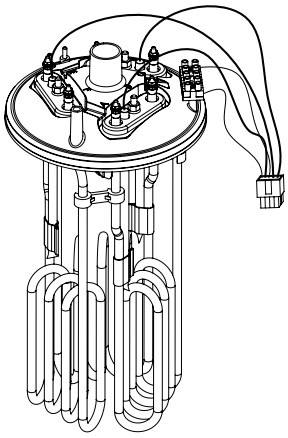

Fig. 14.g

i. to replace the heaters (see paragraph 6.7 "Replacing the parts");
j. clean the heaters;
k. remove the filter collection basket from the bottom of the cylinder: rinse it and clean it with a soft brush;

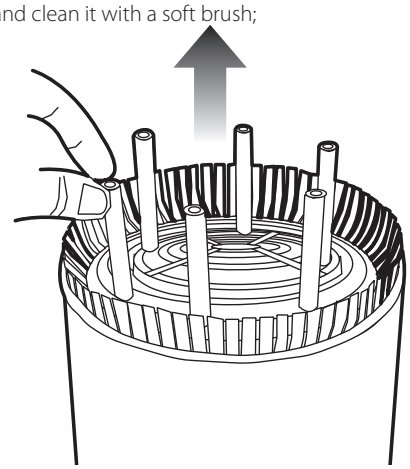

Fig. 14.h

l. clean the anti-adhesive film that may be present on the inner walls of the boiler (see paragraph 6.7 "Replacing the parts");
m. clean and remove the lime from the boiler and reinsert the film (where needed);
n. after you have completed the maintenance interventions, reinstall the boiler following the operations described above reversely.

Models UR020-UR080:
a. loosen the screws (Figure 6.i);

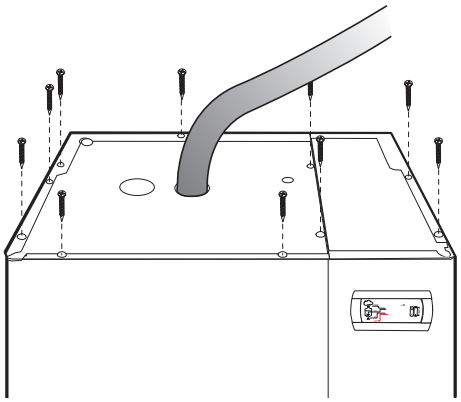

Fig. 14.i

b. unthread the top panel and remove it;

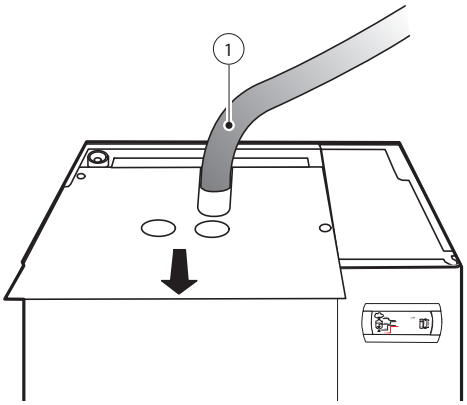

Fig. 14.j

c. loosen the seal strip and remove the steam pipe (1);

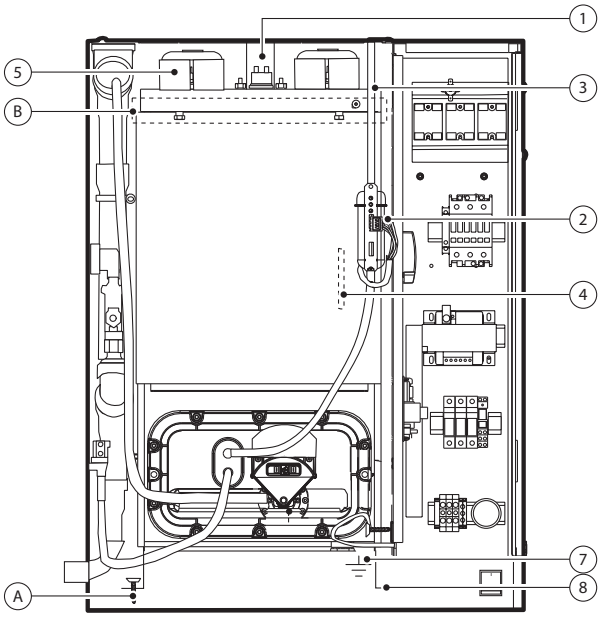

Fig. 14.k

d. disconnect level gauge connector (2);
e. from the boiler cover, remove the pressure compensation pipe (3) connected to the level control;
f. remove the cover that protects the heaters (5), loosen the fastening nuts and remove the wires and the ground cable (6);.
g. disconnect the probe connector and remove the NTC probe from the well (4);
h. remove the screw (A) and the screws of the rear fastening bracket (B);
i. remove the boiler sliding it onto the guides (8);
j. remove the outer insulating mattress (7);
k. unscrew and remove the nuts (9) to raise the cover and remove it from the boiler;

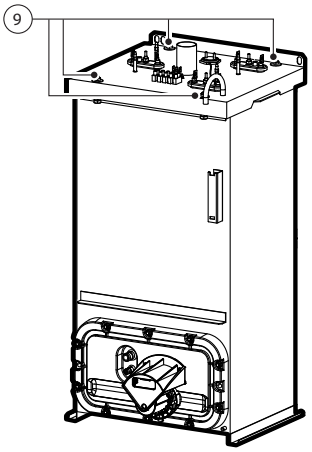

Fig. 14.l

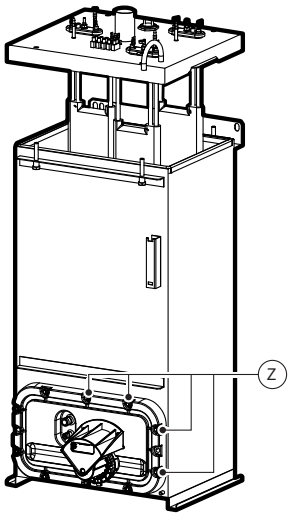

Fig. 14.m

l. to replace the heaters refer to the (see paragraph 6.7 "Replacing the parts");
m. clean the heaters;
n. the heaters (R) can also be cleaned without unmounting the top cover; this can be achieved by removing the front flange and loosening the fastening nuts (Z);
o. now remove the flange with the filter (C);

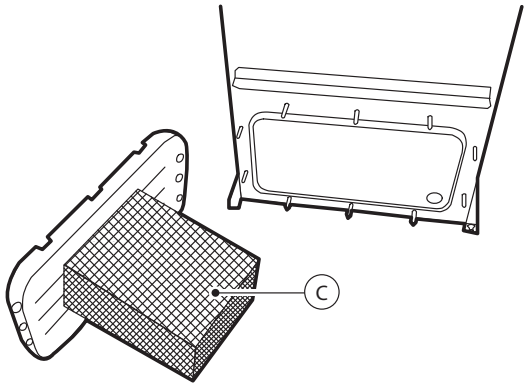

Fig. 14.n

p. rinse the inner walls of the boiler and remove the lime using a soft brush;
q. reinstall the boiler and repeat the previously described operations reversely; please remind to secure the grounding screws.

For power connections please refer to the wiring diagrams of the heaters next to the heads.

Scale collection bag (optional - only unit 2-13 kg)
On the inner wall of the boiler is present (depending on model) a film made in anti-adhesive material that prevents lime from adhering to the inner walls of the same. For cleaning and replacement:
- remove the boiler cover following the steps given in the previous section;
- slowly remove the film towards boiler inlet, without forcing it to avoid damaging the same;
- open the film after having released the click-on couplings;
- clean with water and use a plastic brush, if necessary; replace it if damaged;
- clean the boiler and remove lime;
- rewind the film on itself by hooking the click-on couplings and reinsert it into the boiler.

Cleaning the heaters
After you have removed the limestone that detached more easily, immerse the heaters for almeno 30 minutes in a lukewarm solution of 20% acetic acid, using a non-metallic spatula to remove the surface deposits that are still present. Rinse thoroughly; are plates are coated with anti-adhesive film.

14.5 Feed/drain tempering solenoid valve

UR002-UR013
After having disconnected the cables and the pipes, remove the feed solenoid valve (V2) and check the cleanliness condition of the inlet filter, cleaning it if necessary using water and a soft brush. Carry out the same operations on "drain tempering" valve (V1); (if featured, depending on the model).

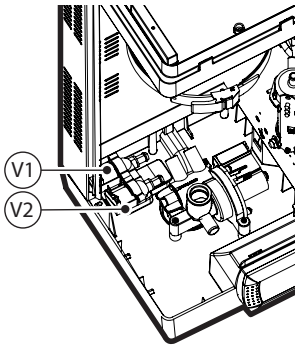

Fig. 14.o

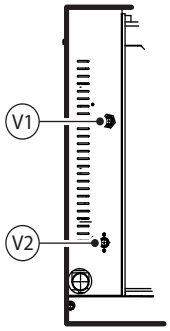

Fig. 14.p

14.6 Fill tank

UR002-UR013
Check that there are no blockages or solid particles in the tank (V) and that the conductivity measuring electrodes are clean; remove any impurities and rinse.

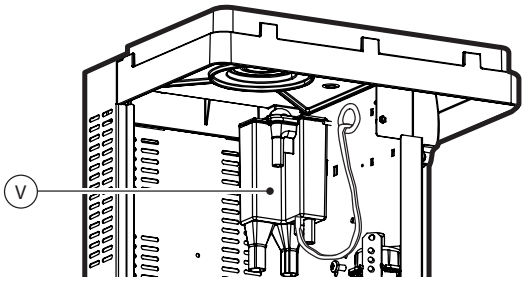

Fig. 14.q

14.7 Replacing the parts

Fuses (auxiliary circuits)
These measure 10.3 x 38 mm and are housed in the fuse cartridge; to check the state of the fuses, check their continuity using a tester. Use the fuses as specified in the table.

UR*03	models
	UR002… UR080
Fuses F1-F2 transformer power supply Fuse F3 pump protection	URKFUSE300 (1 A GL, 10.3 x 38)
Fuse F4 transformer secondary	UEKFUSE400 (4 A AT 5 x 20 ceramic)

Tab. 14.i

UR*U3	models
	UR002… UR080
Fuses F1-F2 transformer power supply Fuse F3 pump protection	URKFUSE100 (1 A GL, 10.3 x 38)
Fuse F4 transformer secondary	UEKFUSE400 (4 A AT 5 x 20 ceramic)

Tab. 14.j

Heater fuses (humidifiers versioni UR*U3)
Dimension of fast fuses 27x60 housed in fuse carrier bases that can be selected. Check their continuity using a tester.

	models			
	UR027 (230V 3 ph)	UR053 (400V 3ph) (460V 3ph)	UR060 (400V 3ph) (460V 3ph)	UR080 (400V 3ph) (460V 3ph) (575V 3ph)
Fuses F5 - F6 - F7	40 A, GG (KTK)	40 A, GG (KTK)	50 A, GG (KTK)	40 A, GG (KTK)
Fuses F8 - F9 - F10	40 A, GG (KTK)	40 A, GG (KTK)	40 A, GG (KTK)	40 A, GG (KTK)
Fuses F11 F12 - F13	not used	not used	not used	40 A, GG (KTK)

Tab. 14.k

Fuse	Fuse code
40 A, GG (KTK)	URKFUSE700
50 A, GG (KTK)	URKFUSE800

Heaters
To replace the heaters, unmount them removing the fastening nut (D) on the cover; in this case it is advisable to replace the seal (G).

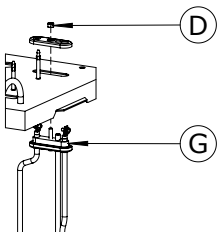

Fig. 14.r

Note: for sizes 002 - 013, spacers are featured between the heaters to guarantee correct positioning. Release the spacers to remove the heaters. After cleaning, reposition the spacers.

PTC temperature sensor
The PTC sensors (one for each heating element) do not require regular maintenance; they should only be replaced if the safety thermostat is activated due to operation without water: in fact, the intervention of just one PTC will cause the control module to shut-down operation. To replace them, remove the boiler (models UR002-UR013) or the top panel of the humidifier (models UR020-UR080) as explained in the previous paragraphs and then:

- remove the covers that protect the heaters;
- disconnect the terminals of the PTC sensor from the terminal block, remove it from probe housing and replace it;
- insert the new sensor and restore wiring.

Note: the sensor should be inserted until it reaches the limit switch.

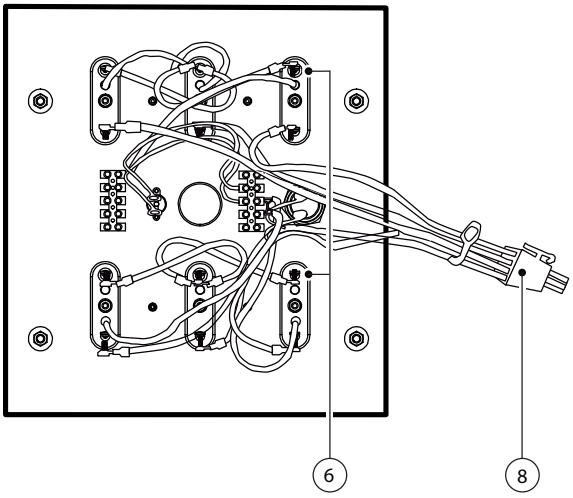

Fig. 14.s

NTC temperature sensor
The NTC temperature sensor is located in probe housing (P) outside the boiler, under the insulation (where featured, depending on the model).

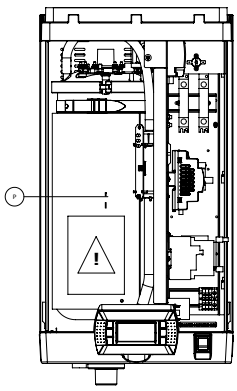

Fig. 14.t

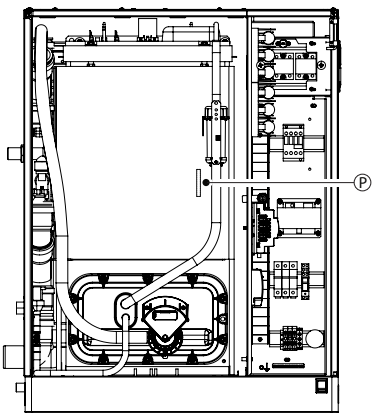

Fig. 14.u

- disconnect the terminals of NTC sensor from the terminal block (8), remove it from probe housing and replace it;

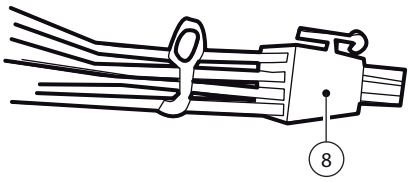

Fig. 14.v

Drain pump
Models UR002-UR013
Procedure:
- remove the boiler as shown in par. 6.4;
- identify the drain pump on the base of the humidifier, unthread the 3 screws (V) and remove it;
- check the condition of gasket (G) and replace it, if required.

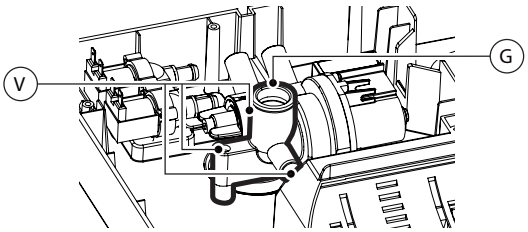

Fig. 14.w

Models UR020-UR080
Procedure:
- unthread the 2 screws (V), remove the cover (C) and the drain pump;
- Check the condition of gasket (G) and replace it, if required.

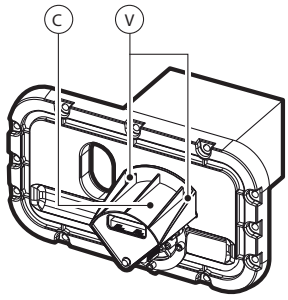

Fig. 14.x

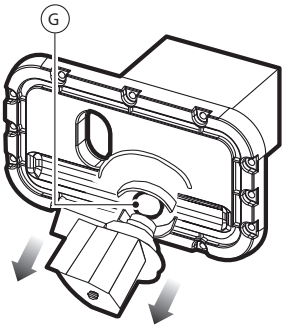

Fig. 14.y

Solid state relay (SSR)
The solid state relays (number depending on the model) can be damaged in two ways: by short-circuit or burn-out. With regard to power supply, the possible consequences are: continuous conduction or permanent opening. In the event of malfunctioning, check the conduction of the relay using a tester.

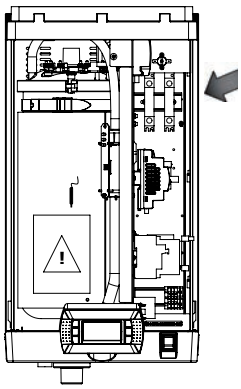

Fig. 14.z

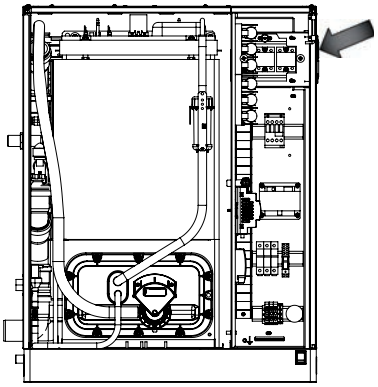

Fig. 14.aa

Fan
SSR relays are cooled by a fan. This is located at the base of the humidifier, for models UR002-UR013; at the top right of the unit for models UR020-UR080. With insufficient ventilation the temperature of the electrical panel may rise excessively until it reaches 65°C. Power to the solid-state relays is cut off by a special Klixon (heat sensor) with manual reset (see the wiring diagram), without signalling the intervention.

In this case, check:
- if an SSR thermal breaker has been triggered;
- that the controller supplies 24 Vac to the fan. On models U002-UR013 a 24 Vdc rectifier card is used to power the fan.

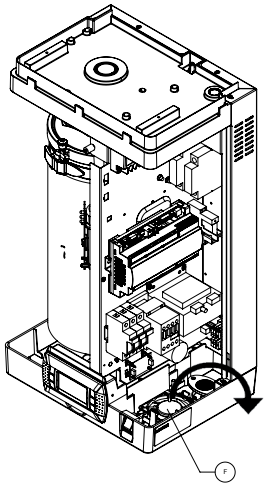

Fig. 14.ab

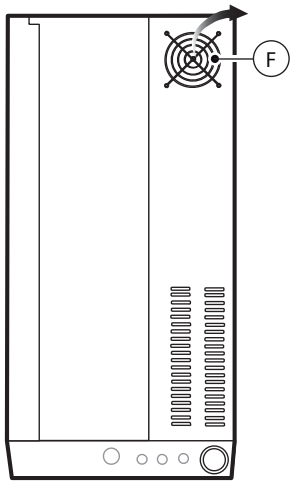

Fig. 14.ac

If the fan is faulty:

Models UR002-UR013:
- replace it after having unthreaded the fastening screws;

Models UR020-UR080:
- unscrew the 4 fastening screws placed on the right side of the structural work and extract the fan from the inside of the panel.

In case of malfunction, the thermal switch can be replaced unscrewing the fastening screws.

Note:
- for models UR002-UR013 the fan is of suction type;
- for models UR020-UR080 the fan is of exhaust type.

14.8 Mechanical discharge of water in the cylinder

Discharge by gravity without turning on the humidifier is recommended if:
- the humidifier is out of order
- it is required to empty the cylinder without turning on the humidifier.

Procedure:
- make sure the humidifier is not powered;
- remove the front panel;
- enable the mechanical device located below the cylinder (A).

Models UR002-UR013

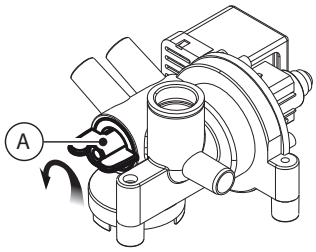

Fig. 14.ad

15. WIRING DIAGRAMS

15.1 Wiring diagram UR002-UR004 single-phase 208 V / 230 V - version U

* To be carried out by the installer

TB	Terminal Board
THP	Motor Protector
QC1	Fast coupling
K	Contactor
LLC	Level gauge
ST	Sensor terminal block
F1 - F2	Primary circuit fuses
F3	Drain pump safety fuse
F4	Secondary circuit fuse
FV	Infeed valve
PTC	Heater temperature sensor
TR	Transformer
DP	Drain pump
LS	High level electrodes
CS	Conductivity meter electrodes
MS	Manual switch
R	Electrical resistor
SSR1-2	Solid state relay
FSB	Fan control board
FAN	Fan
RDT	Drain tempering relay
DT	Drain tempering valve
NTC	Water temperature sensor
X1-X2	Power for fan blower (24Vac)
G	24 Vac power supply terminal (+G) for Carel 0-10 Vdc probes.

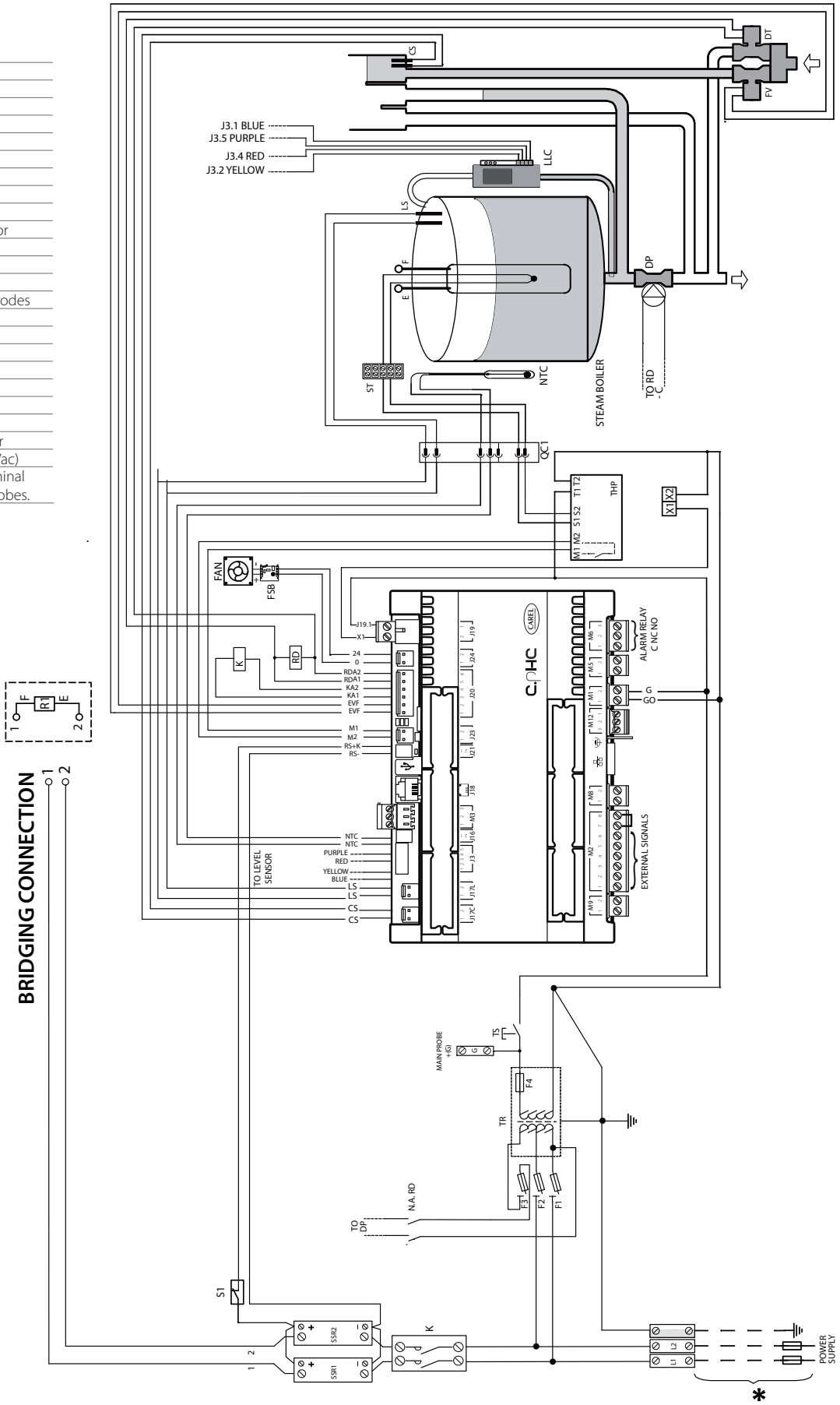

Fig. 15.a

15.2 Wiring diagram UR002-UR004 single-phase 230 V - version 0

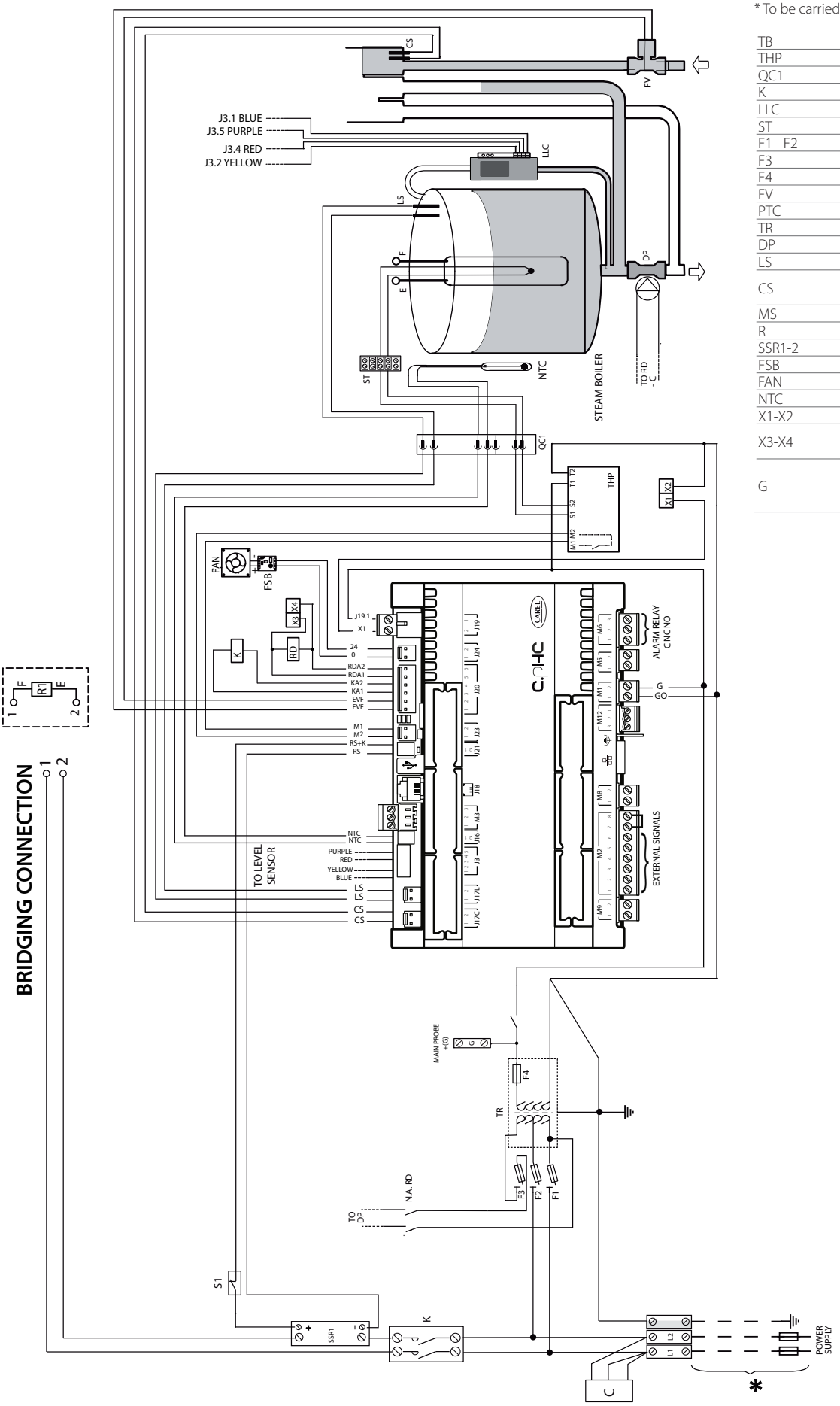

Fig. 15.b

* To be carried out by the installer

TB	Terminal Board
THP	Motor Protector
QC1	Fast coupling
K	Contactor
LLC	Level gauge
ST	Sensor terminal block
F1 - F2	Primary circuit fuses
F3	Drain pump safety fuse
F4	Secondary circuit fuse
FV	Infeed valve
PTC	Heater temperature sensor
TR	Transformer
DP	Drain pump
LS	High level electrodes
CS	Conductivity meter electrodes
MS	Manual switch
R	Electrical resistor
SSR1-2	Solid state relay
FSB	Fan control board
FAN	Fan
NTC	Water temperature sensor
X1-X2	Power for fan blower (24Vac)
X3-X4	Power for drain tempering kit (24Vac)
G	24 Vac power supply terminal (+G) for Carel 0-10 Vdc probes.

15.3 Wiring diagram UR006 single-phase 208 V / 230 V - version U

* To be carried out by the installer

TB	Terminal Board
THP	Motor Protector
QC1	Fast coupling
K	Contactor
LLC	Level gauge
ST	Sensor terminal block
F1 - F2	Primary circuit fuses
F3	Drain pump safety fuse
F4	Secondary circuit fuse
FV	Infeed valve
PTC1…3	Temperature sensor heater 1…3
TR	Transformer
DP	Drain pump
LS	High level electrodes
CS	Conductivity meter electrodes
MS	Manual switch
R1…3	Electric heater 1…3
SSR1…2	Solid state relay
FSB	Fan control board
FAN	Fan
RDT	Drain tempering relay
DT	Drain tempering valve
NTC	Water temperature sensor
X1-X2	Power for fan blower (24Vac)
G	24 Vac power supply terminal (+G) for Carel 0-10 Vdc probes.

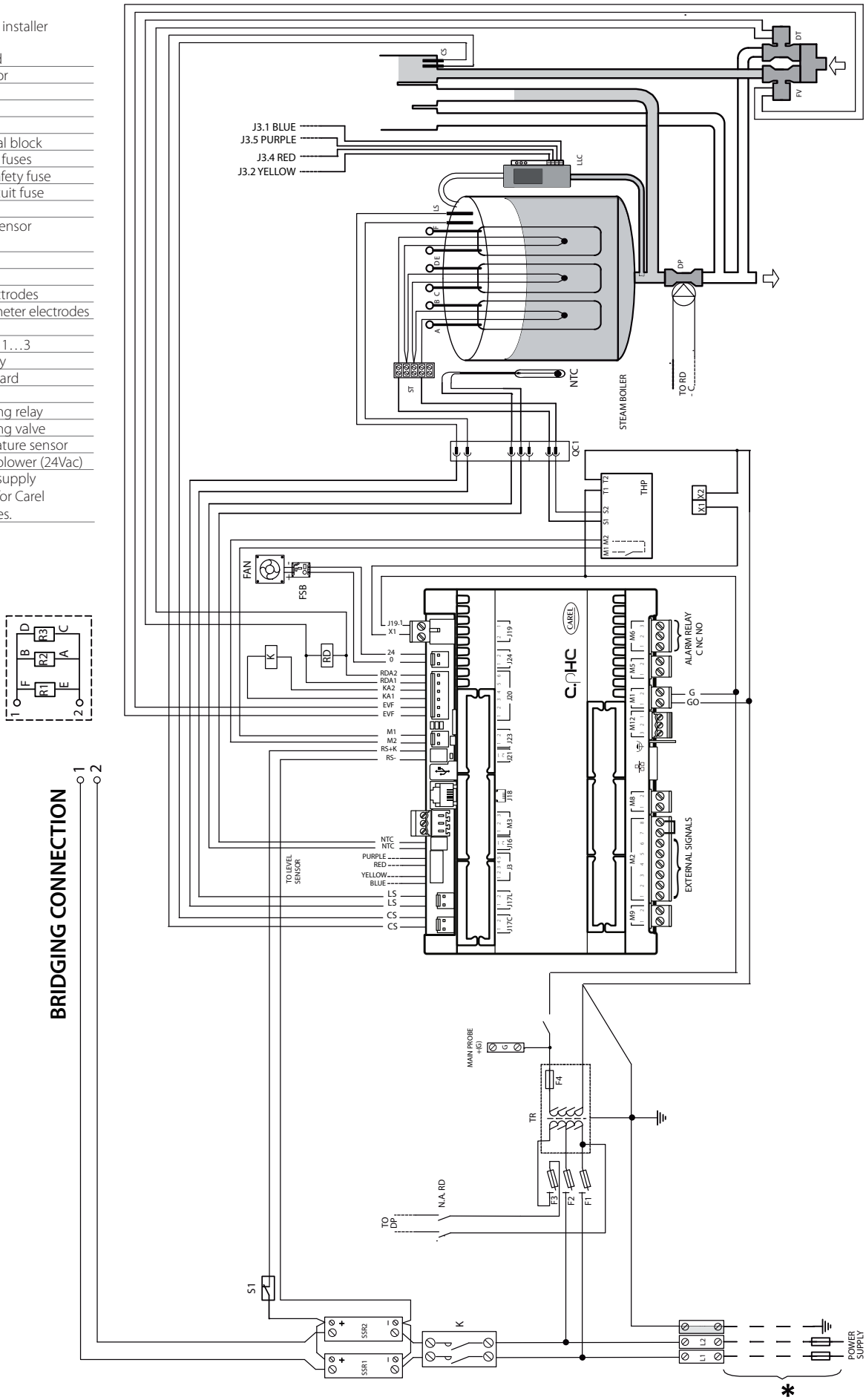

Fig. 15.c

15.4 Wiring diagram UR006 single-phase 230 V - version 0

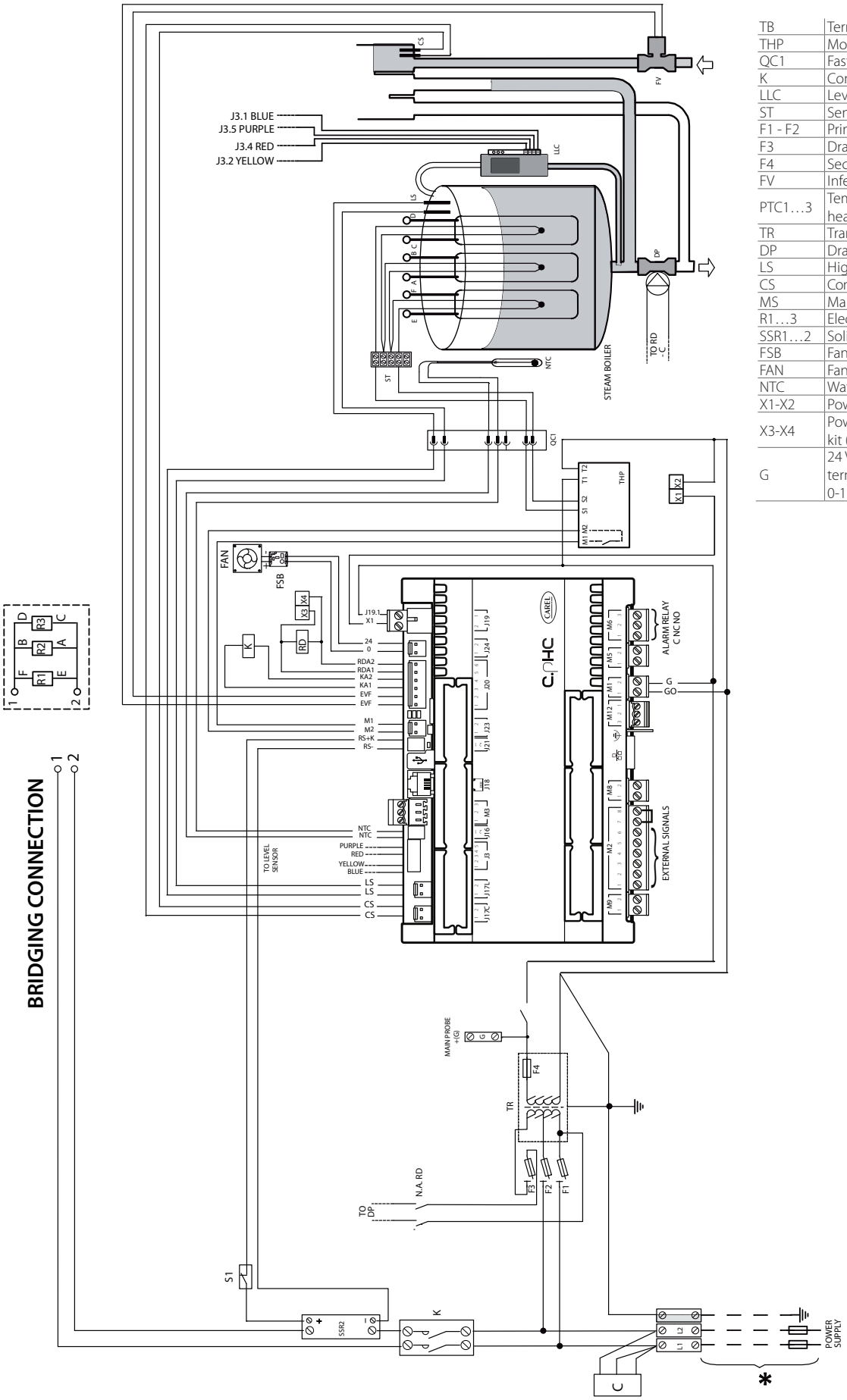

* To be carried out by the installer

TB	Terminal Board
THP	Motor Protector
QC1	Fast coupling
K	Contactor
LLC	Level gauge
ST	Sensor terminal block
F1 - F2	Primary circuit fuses
F3	Drain pump safety fuse
F4	Secondary circuit fuse
FV	Infeed valve
PTC1…3	Temperature sensor heater 1…3
TR	Transformer
DP	Drain pump
LS	High level electrodes
CS	Conductivity meter electrodes
MS	Manual switch
R1…3	Electrical resistor
SSR1…2	Solid state relay
FSB	Fan control board
FAN	Fan
NTC	Water temperature sensor
X1-X2	Power for fan blower (24Vac)
X3-X4	Power for drain tempering kit (24Vac)
G	24 Vac power supply terminal (+G) for Carel 0-10 Vdc probes.

Fig. 15.d

15.5 Wiring diagram UR006-UR010-UR013 three-phase (208-230-400-460-575 V) - version U

* To be carried out by the installer

TB	Terminal Board
THP	Motor Protector
QC1	Fast coupling
K	CONTACTOR
LLC	Level gauge
ST	Sensor terminal block
F1 - F2	Primary circuit fuses
F3	Drain pump safety fuse
F4	Secondary circuit fuse
FV	Infeed valve
PTC1…3	Temperature sensor heater 1…3
TR	Transformer
DP	Drain pump
LS	High level electrodes
CS	Conductivity meter electrodes
MS	Manual switch
R1…3	Electric heater 1…3
SSR1…3	Solid state relay 1…3
FSB	Fan control board
FAN	Fan
RDT	Drain tempering relay
DT	Drain tempering valve
NTC	Water temperature sensor
X1-X2	Power for fan blower (24Vac)
G	24 Vac power supply terminal (+G) for Carel 0-10 Vdc probes.

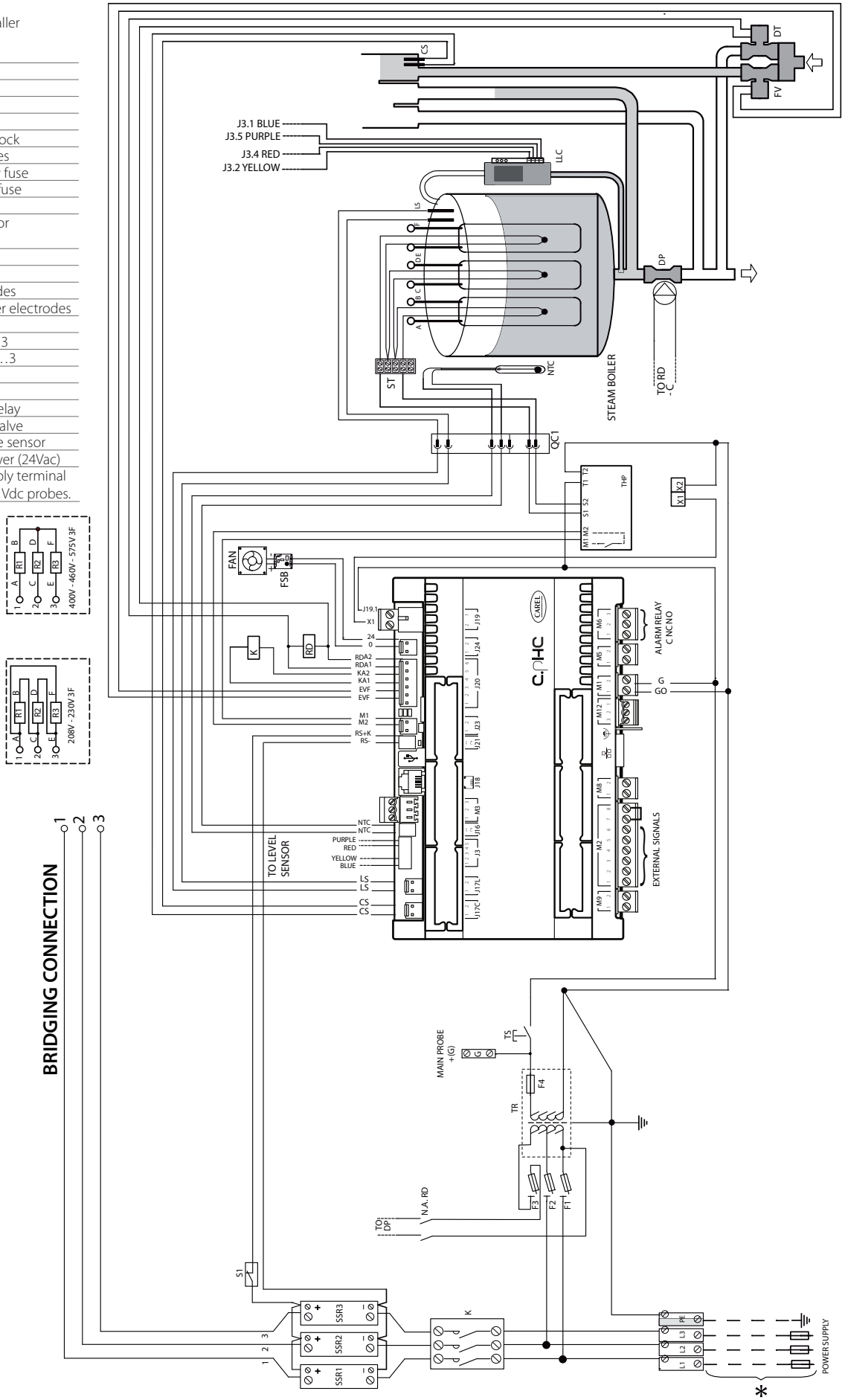

Fig. 15.e

15.6 Wiring diagram UR006-UR010-UR013 three-phase (230-400-460 V) - version 0

* To be carried out by the installer

TB	Terminal Board
THP	Motor Protector
QC1	Fast coupling
K	CONTACTOR
LLC	Level gauge
ST	Sensor terminal block
F1 - F2	Primary circuit fuses
F3	Drain pump safety fuse
F4	Secondary circuit fuse
FV	Infeed valve
PTC1…3	Temperature sensor heater 1…3
TR	Transformer
DP	Drain pump
LS	High level electrodes
CS	Conductivity meter electrodes
MS	Manual switch
R1…3	Electric heater 1…3
SSR1…2	Solid state relay 1…2
FSB	Fan control board
FAN	Fan
NTC	Water temperature sensor
X1-X2	Power for fan blower (24Vac)
X3-X4	Power for drain tempering kit (24Vac)
G	24 Vac power supply terminal (+G) for Carel 0-10 Vdc probes.

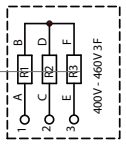

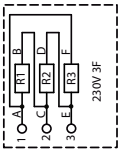

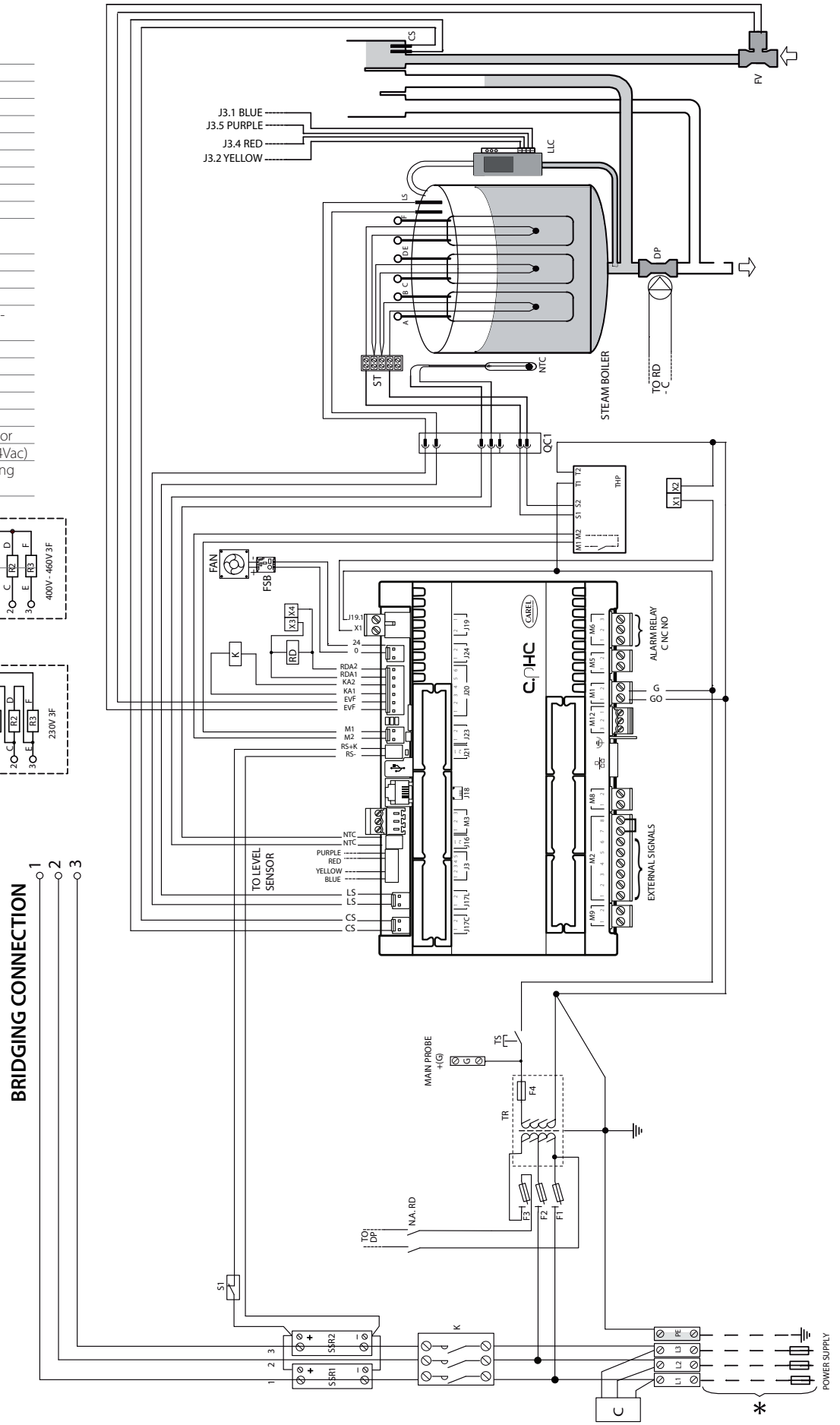

Fig. 15.f

15.7 Wiring diagram UR020 three-phase (208-230-400-460-575 V) - version U
Wiring diagram UR027 three-phase (400-460-575 V) - version U

* To be carried out by the installer

THP	Motor Protector
QC1	Fast coupling
K	CONTACTOR
LLC	Level gauge
ST	Sensor terminal block
F1 - F2	Primary circuit fuses
F3	Drain pump safety fuse
F4	Secondary circuit fuse
FV	Infeed valve
PTC1…3	Temperature sensor heater 1…3
TR	Transformer
DP	Drain pump
LS	High level electrodes
CS	Conductivity meter electrodes
MS	Manual switch
R1…3	Electric heater 1…3
SSR1…3	Solid state relay 1…3
FSB	Fan control board
FAN	Fan
RDT	Drain tempering relay
DT	Drain tempering valve
NTC	Water temperature sensor
S1	SSR thermal switch
S2	Heater thermal switch
G	24 Vac power supply terminal (+G) for Carel 0-10 Vdc probes.

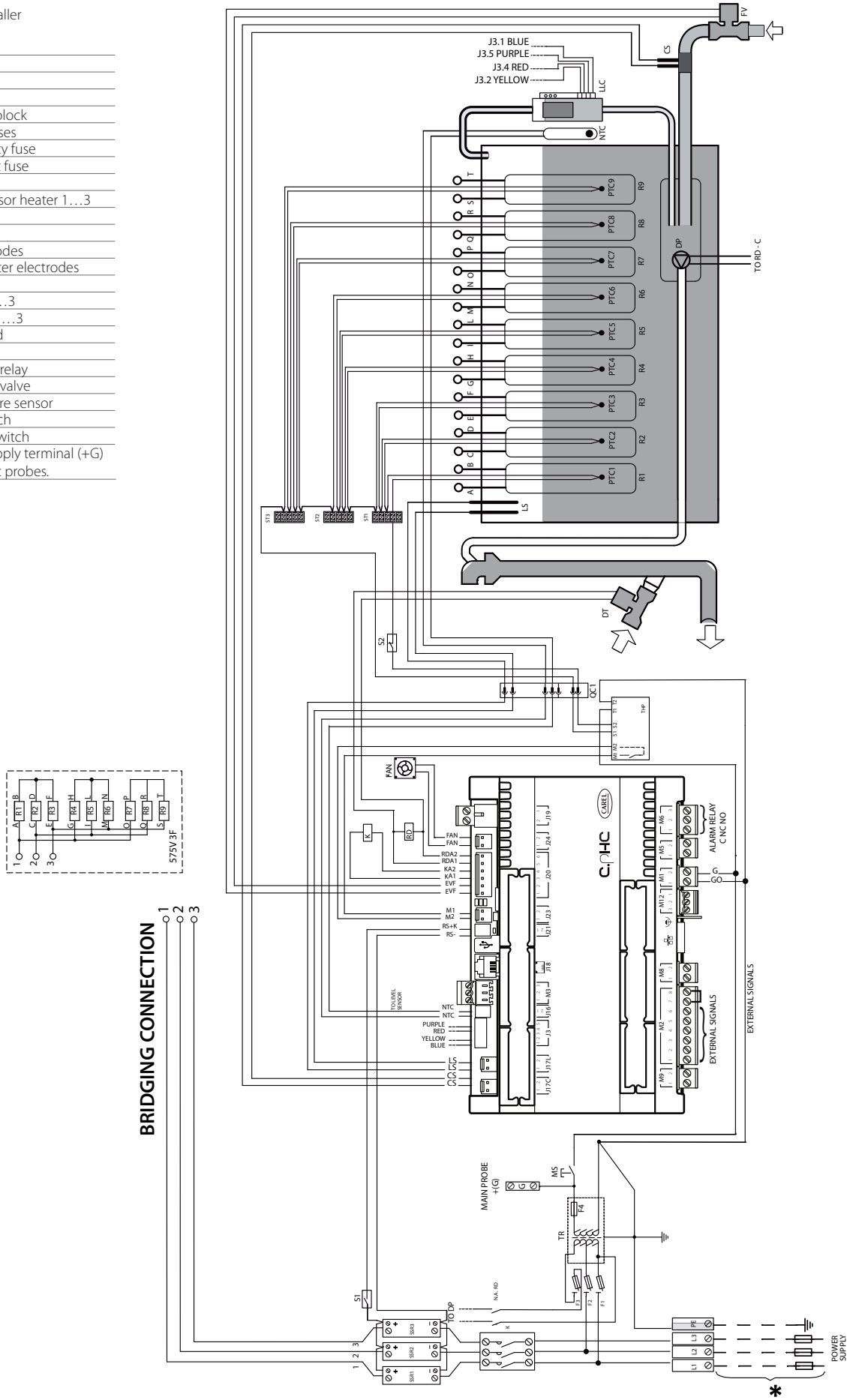

Fig. 15.g

15.8 Wiring diagram UR020-UR027 three-phase (230-400-460 V) - version 0

* To be carried out by the installer

THP	Motor Protector
QC1	Fast coupling
K	CONTACTOR
LLC	Level gauge
ST	Sensor terminal block
F1 - F2	Primary circuit fuses
F3	Drain pump safety fuse
F4	Secondary circuit fuse
FV	Infeed valve
PTC1…3	Temperature sensor heater 1…3
TR	Transformer
DP	Drain pump
LS	High level electrodes
CS	Conductivity meter electrodes
MS	Manual switch
R1…3	Electric heater 1…3
SSR1…3	Solid state relay 1…3
FAN	Fan
NTC	Water temperature sensor
S1	SSR thermal switch
S2	Heater thermal switch
X3-X4	Power for drain tempering kit (24Vac)
G	24 Vac power supply terminal (+G) for Carel 0-10 Vdc probes.

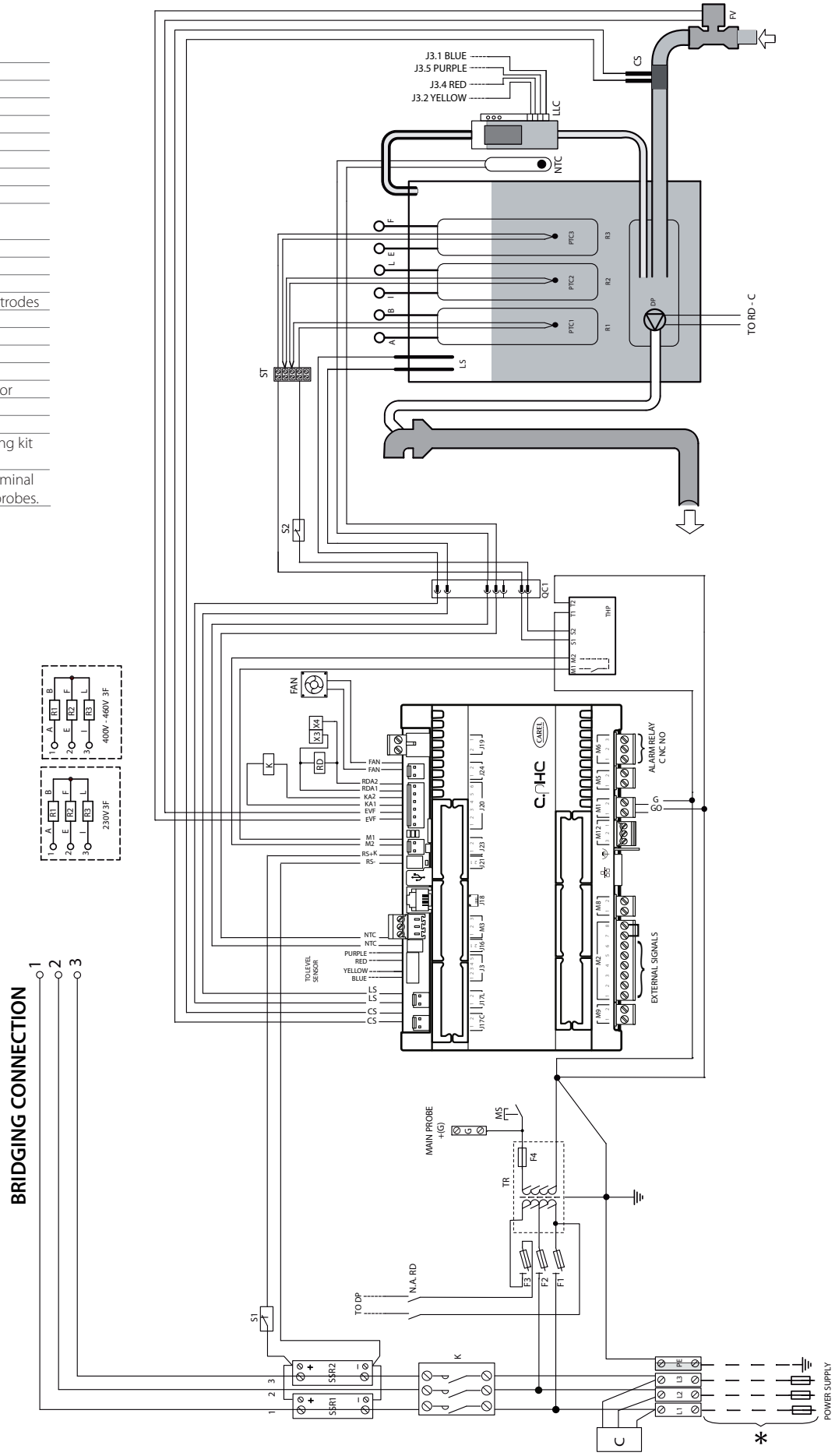

Fig. 15.h

CAREL

15.9 Wiring diagram UR027 three-phase (230 V) - version U

* To be carried out by the installer

THP	Motor Protector
QC1	Fast coupling
K	CONTACTOR
LLC	Level gauge
ST	Sensor terminal block
F1 - F2	Primary circuit fuses
F3	Drain pump safety fuse
F4	Secondary circuit fuse
FV	Infeed valve
PTC1…3	Temperature sensor heater 1…3
TR	Transformer
DP	Drain pump
LS	High level electrodes
CS	Conductivity meter electrodes
MS	Manual switch
R1…3	Electric heater 1…3
SSR1…3	Solid state relay 1…3
FAN	Fan
RDT	Drain tempering relay
DT	Drain tempering valve
NTC	Water temperature sensor
S1	SSR thermal switch
S2	Heater thermal switch
G	24 Vac power supply terminal (+G) for Carel 0-10 Vdc probes.

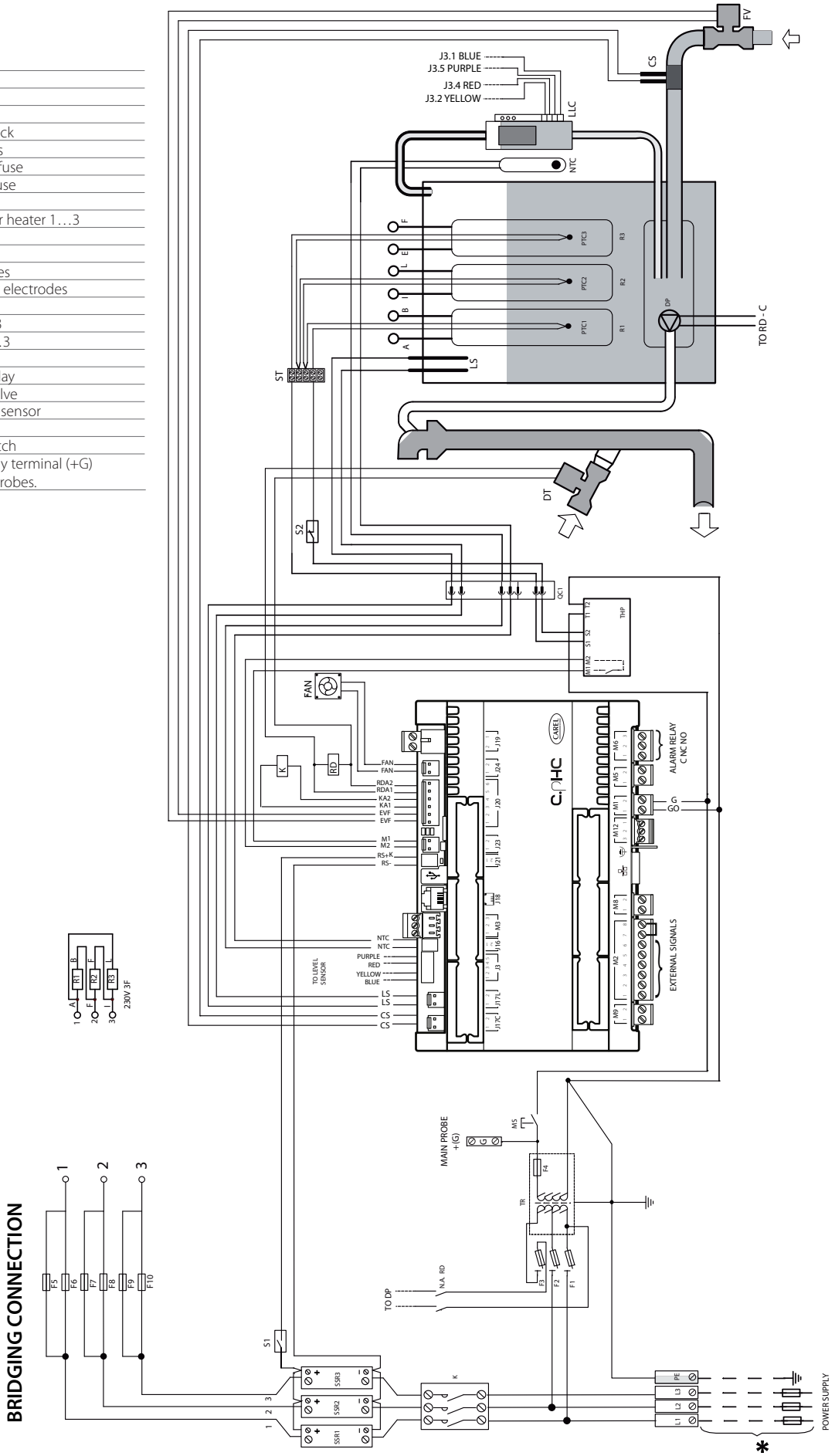

Fig. 15.i

15.10 Wiring diagram UR040 three-phase (400-460-575 V) - version U
Wiring diagram UR053 three-phase (575 V) - version U

* To be carried out by the installer

THP	Motor Protector
QC1	Fast coupling
K	CONTACTOR
LLC	Level gauge
ST1…2	Sensor terminal blocks
F1 - F2	Primary circuit fuses
F3	Drain pump safety fuse
F4	Secondary circuit fuse
FV	Infeed valve
PTC1…6	Temperature sensor heater 1…6
TR	Transformer
DP	Drain pump
LS	High level electrodes
CS	Conductivity meter electrodes
MS	Manual switch
R1…6	Electric heater 1…6
SSR1…3	Solid state relay 1…3
FAN	Fan
RDT	Drain tempering relay
DT	Drain tempering valve
NTC	Water temperature sensor
S1	SSR thermal switch
S2	Heater thermal switch
G	24 Vac power supply terminal (+G) for Carel 0-10 Vdc probes.

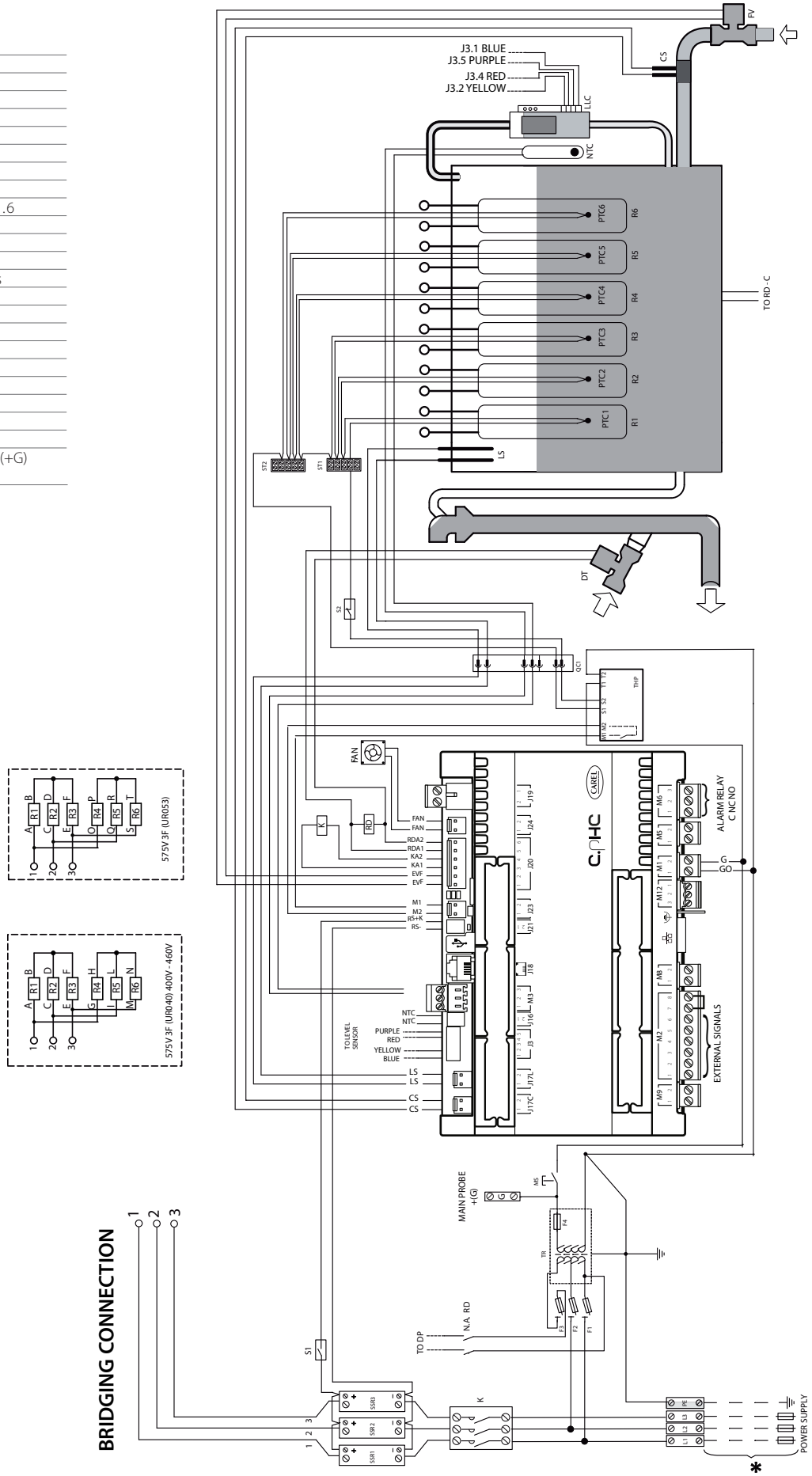

Fig. 15.j

15.11 Wiring diagram UR040-UR053 three-phase (400-460 V) - version 0

* To be carried out by the installer

THP	Motor Protector
QC1	Fast coupling
K	CONTACTOR
LLC	Level gauge
ST1…2	Sensor terminal blocks
F1 - F2	Primary circuit fuses
F3	Drain pump safety fuse
F4	Secondary circuit fuse
FV	Infeed valve
PTC1…6	Temperature sensor heater 1…6
TR	Transformer
DP	Drain pump
LS	High level electrodes
CS	Conductivity meter electrodes
MS	Manual switch
R1…6	Electric heater 1…6
SSR1…3	Solid state relay 1…3
FAN	Fan
NTC	Water temperature sensor
S1	SSR thermal switch
S2	Heater thermal switch
X3-X4	Power for drain tempering kit (24Vac)
G	24 Vac power supply terminal (+G) for Carel 0-10 Vdc probes.

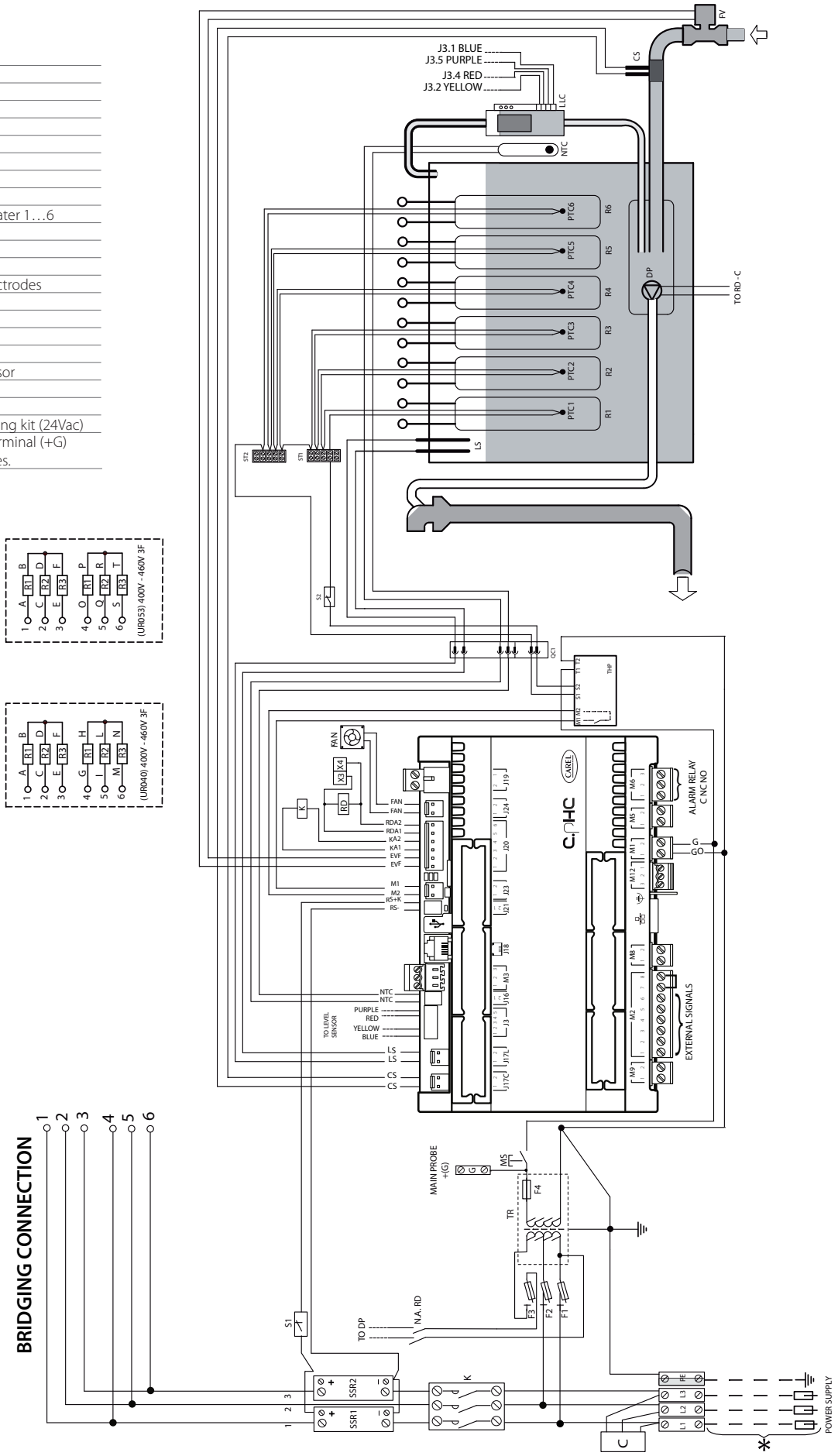

Fig. 15.k

15.12 Wiring diagram UR053 three-phase (400-460 V) - version U

* To be carried out by the installer

QC1	Fast coupling
K	CONTACTOR
LLC	Level gauge
ST1…2	Sensor terminal blocks
F1 - F2	Primary circuit fuses
F3	Drain pump safety fuse
F4	Secondary circuit fuse
FV	Infeed valve
PTC1…6	Temperature sensor heater 1…6
TR	Transformer
DP	Drain pump
LS	High level electrodes
CS	Conductivity meter electrodes
MS	Manual switch
R1…6	Electric heater 1…6
SSR1…3	Solid state relay 1…3
FAN	Fan
RDT	Drain tempering relay
DT	Drain tempering valve
NTC	Water temperature sensor
S1	SSR thermal switch
S2	Heater thermal switch
G	24 Vac power supply terminal (+G) for Carel 0-10 Vdc probes.

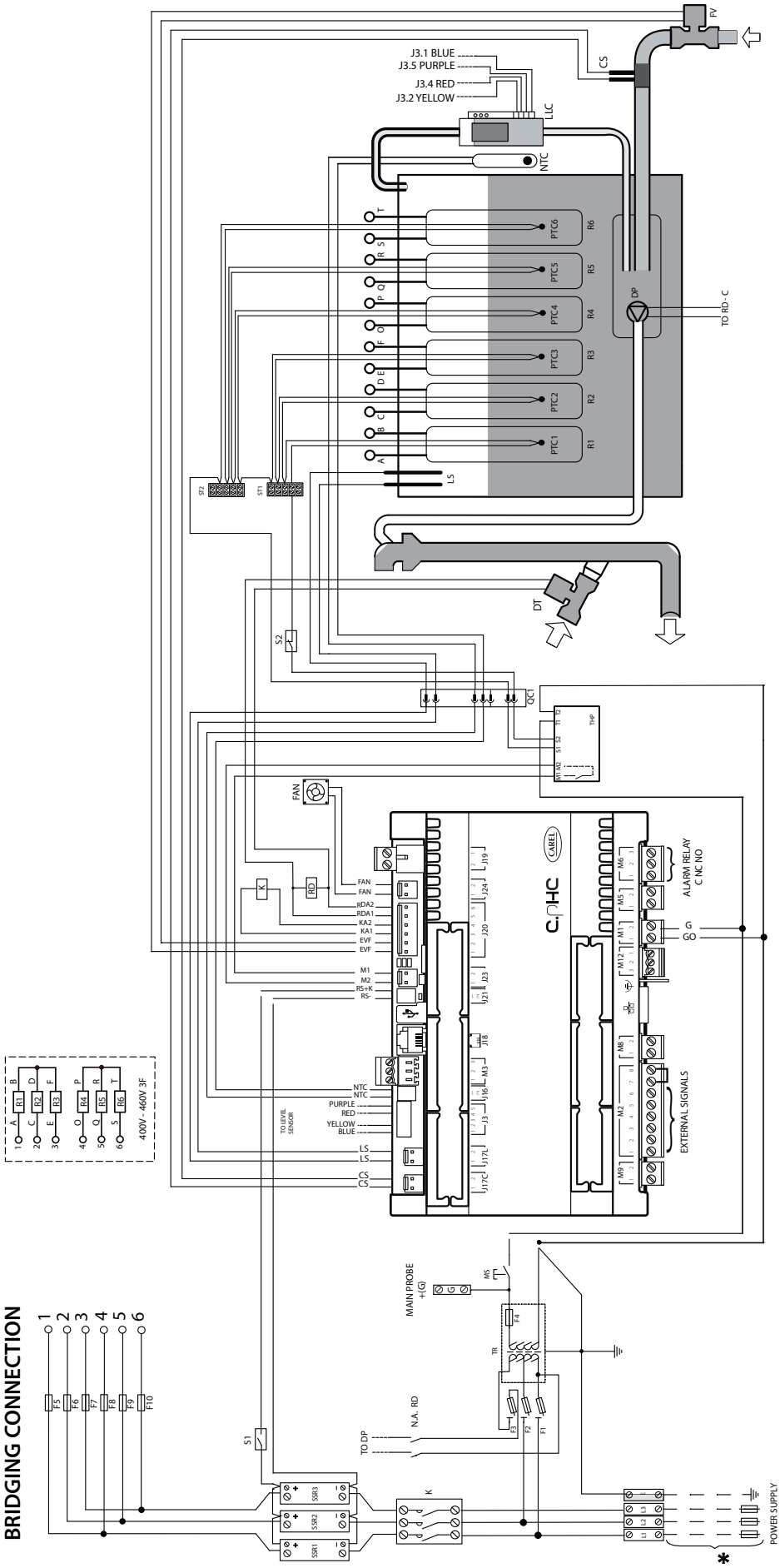

Fig. 15.l

CAREL

15.13 Wiring diagram UR060 three-phase (575 V) - version U

* To be carried out by the installer

QC1	Fast coupling
K	CONTACTOR
LLC	Level gauge
ST1…3	Sensor terminal blocks
F1 - F2	Primary circuit fuses
F3	Drain pump safety fuse
F4	Secondary circuit fuse
FV	Infeed valve
PTC1…9	Temperature sensor heater 1…9
TR	Transformer
DP	Drain pump
LS	High level electrodes
CS	Conductivity meter electrodes
MS	Manual switch
R1…9	Electric heater 1…9
SSR1…3	Solid state relay 1…3
FAN	Fan
RDT	Drain tempering relay
DT	Drain tempering valve
NTC	Water temperature sensor
S1	SSR thermal switch
S2	Heater thermal switch
G	24 Vac power supply terminal (+G) for Carel 0-10 Vdc probes.

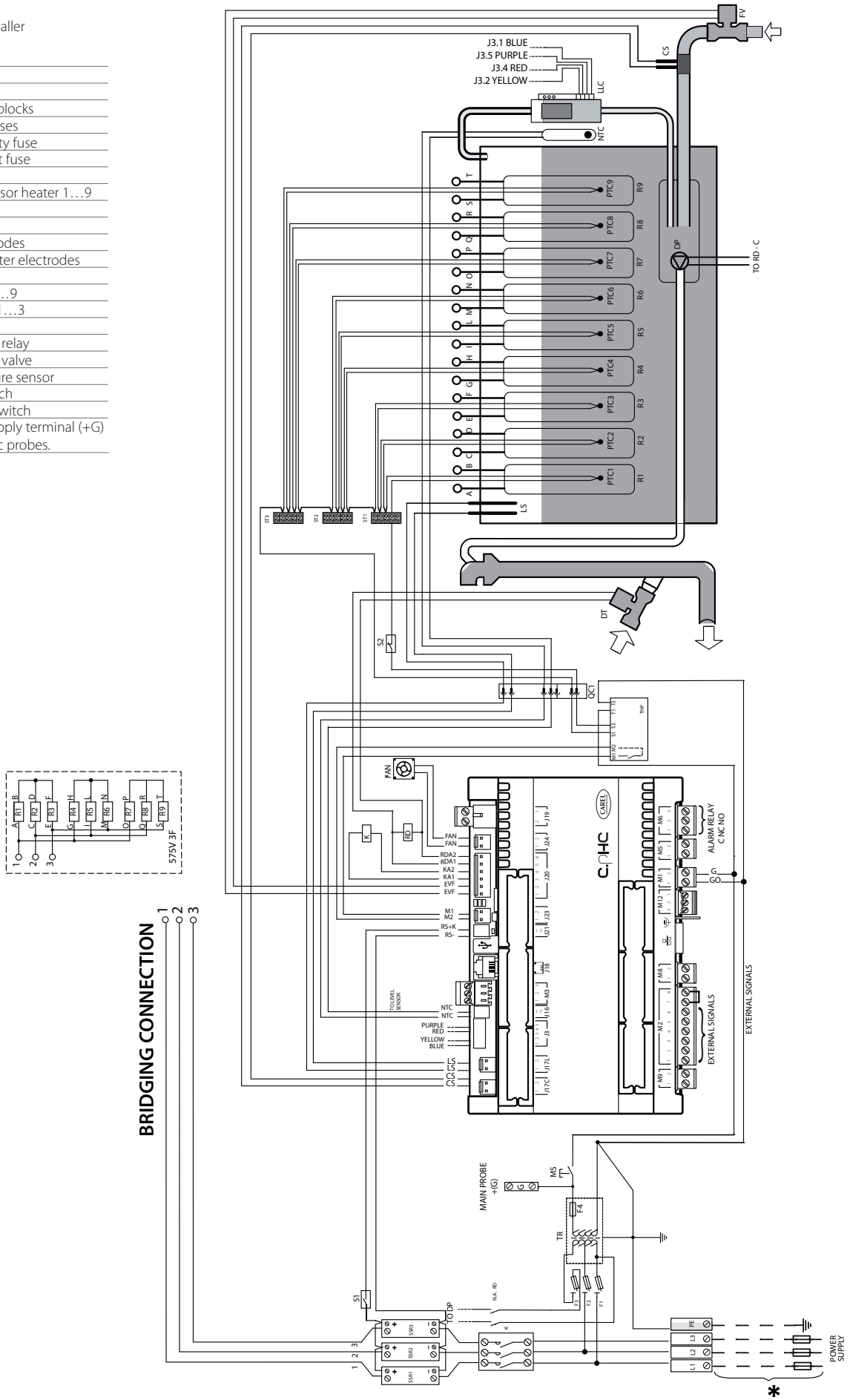

Fig. 15.m

15.14 Wiring diagram UR060 (400-460 V) - version U

* To be carried out by the installer

QC1	Fast coupling
K	CONTACTOR
LLC	Level gauge
ST1…3	Sensor terminal blocks
F1 - F2	Primary circuit fuses
F3	Drain pump safety fuse
F4	Secondary circuit fuse
FV	Infeed valve
PTC1…9	Temperature sensor heater 1…9
TR	Transformer
DP	Drain pump
LS	High level electrodes
CS	Conductivity meter electrodes
MS	Manual switch
R1…9	Electric heater 1…9
SSR1…2	Solid state relay 1…2
FAN	Fan
NTC	Water temperature sensor
S1	SSR thermal switch
S2	Heater thermal switch
C	Filter
G	24 Vac power supply terminal (+G) for Carel 0-10 Vdc probes.

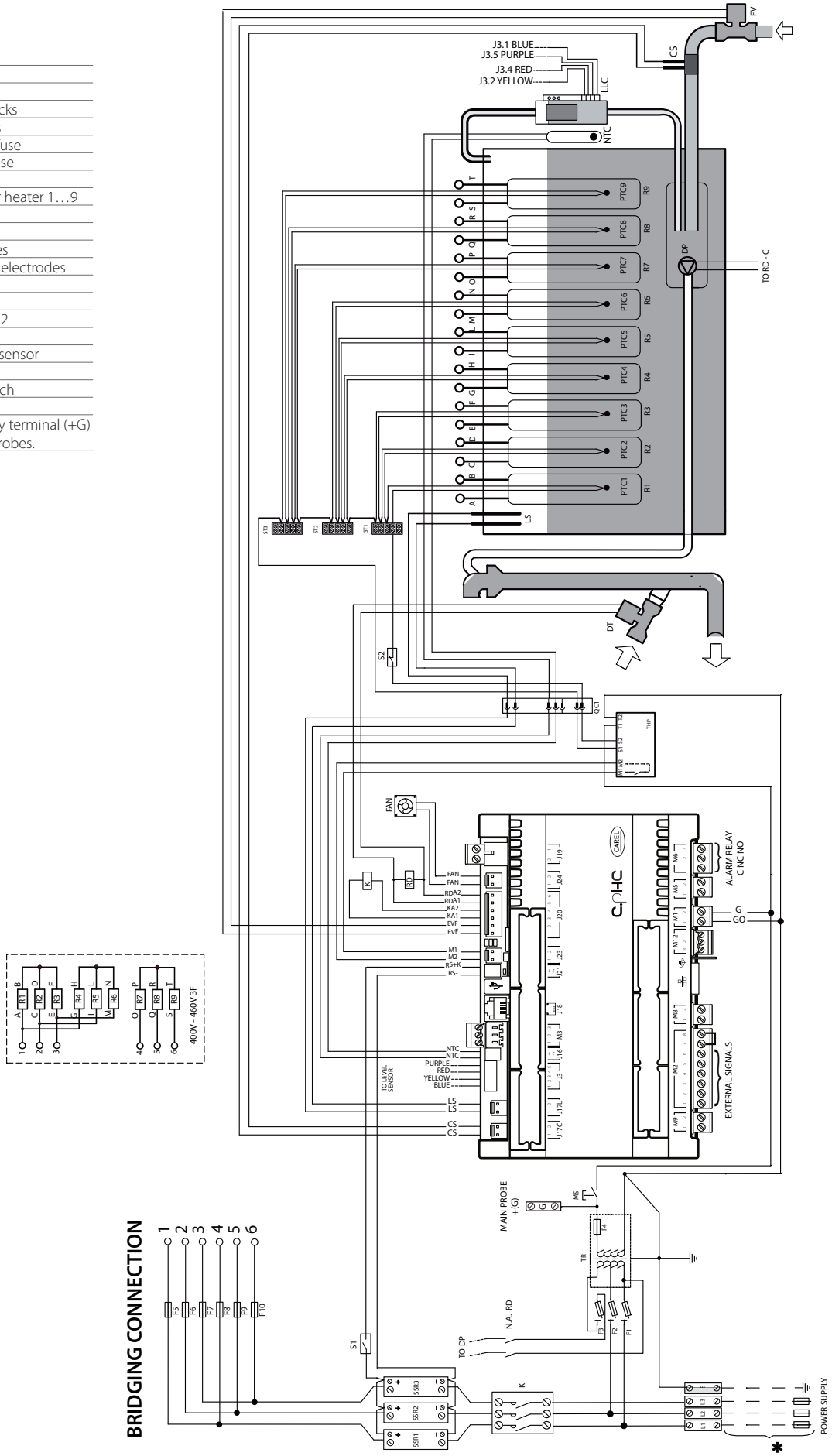

Fig. 15.n

CAREL

15.15 Wiring diagram UR060-UR080 three-phase (400-460 V) - version 0

* To be carried out by the installer

K	CONTACTOR
LLC	Level gauge
ST1…3	Sensor terminal blocks
F1 - F2	Primary circuit fuses
F3	Drain pump safety fuse
F4	Secondary circuit fuse
FV	Infeed valve
PTC1…9	Temperature sensor heater 1…9
TR	Transformer
DP	Drain pump
LS	High level electrodes
CS	Conductivity meter electrodes
MS	Manual switch
R1…9	Electric heater 1…9
SSR1…3	Solid state relay 1…3
FAN	Fan
RDT	Drain tempering relay
DT	Drain tempering valve
NTC	Water temperature sensor
S1	SSR thermal switch
S2	Heater thermal switch
X3-X4	Power for drain tempering kit (24Vac)
G	24 Vac power supply terminal (+G) for Carel 0-10 Vdc probes.

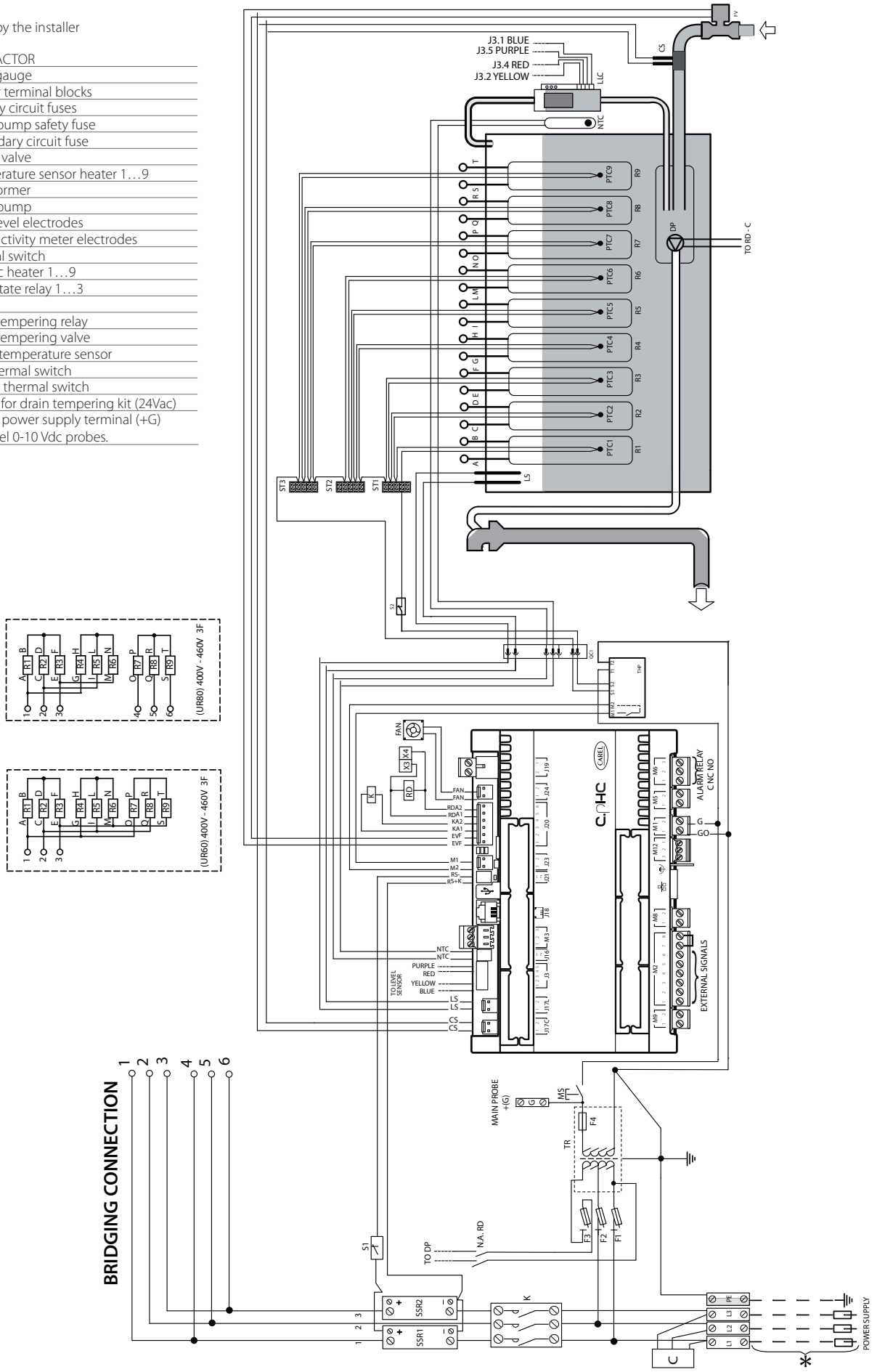

Fig. 15.o

15.16 Wiring diagram UR080 three-phase (400-460-575 V) - version U

* To be carried out by the installer

QC1	Fast coupling
K	CONTACTOR
LLC	Level gauge
ST1…3	Sensor terminal blocks
F1 - F2	Primary circuit fuses
F3	Drain pump safety fuse
F4	Secondary circuit fuse
FV	Infeed valve
PTC1…9	Temperature sensor heater 1…9
TR	Transformer
DP	Drain pump
LS	High level electrodes
CS	Conductivity meter electrodes
MS	Manual switch
R1…9	Electric heater 1…9
SSR1…2	Solid state relay 1…2
FAN	Fan
NTC	Water temperature sensor
S1	SSR thermal switch
S2	Heater thermal switch
C	Filter
G	24 Vac power supply terminal (+G) for Carel 0-10 Vdc probes.

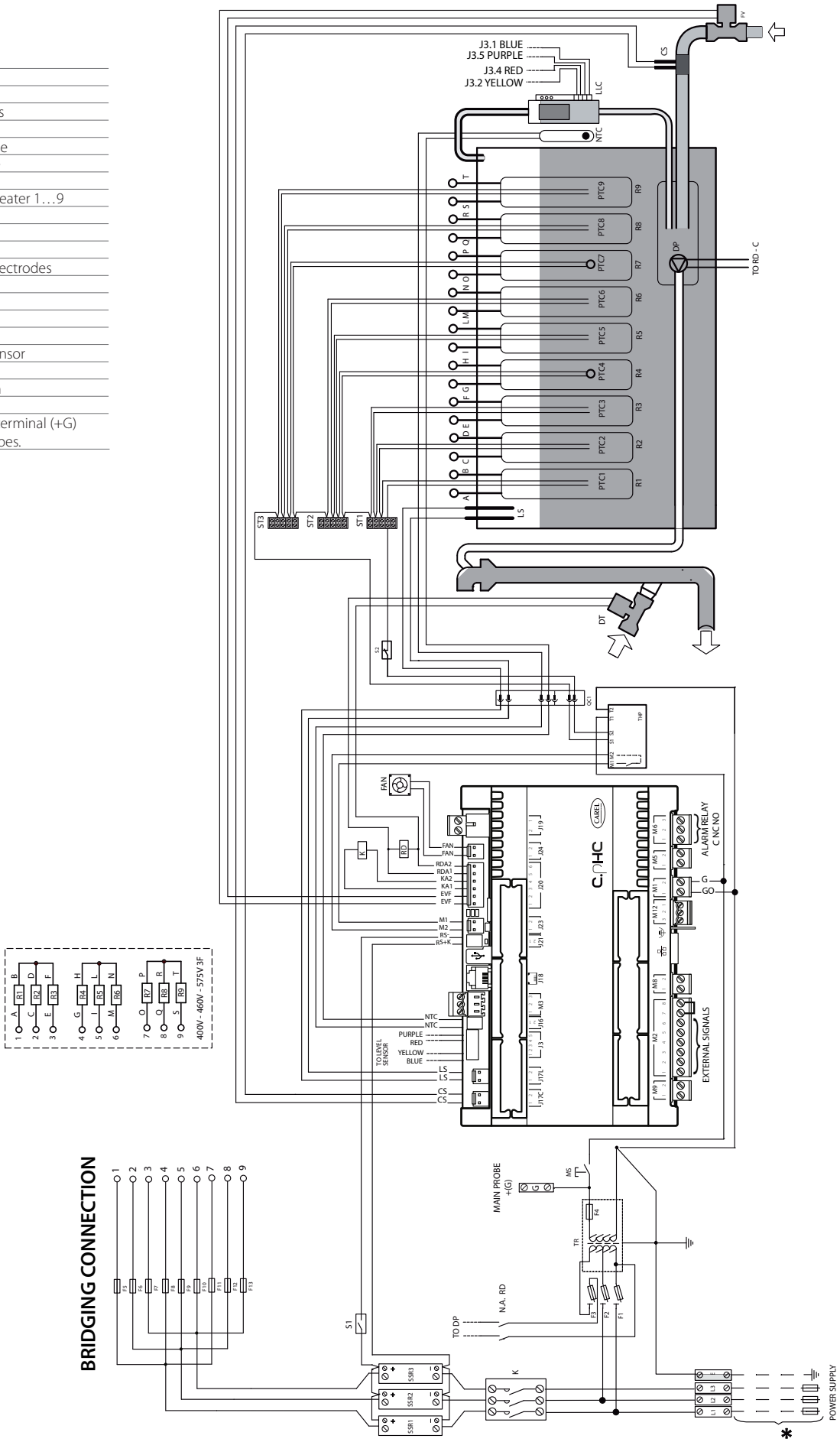

Fig. 15.p

16. GENERAL FEATURES AND MODELS

16.1 heaterSteam models and electrical features

The table below contains the electrical data regarding the power supply voltages of the various models and the functional characteristics of each. Note that some models may be powered at different voltages, obviously with different consumption and steam output.

Stand. mod.	Output [2-4] (kg/h) (lbs/hr)	Power [2] (KW)	Code	Voltage [1] (@50/60 Hz)	Elements (n° x W)	Type of connection	Current (A)	Wire size at terminal (mm^2) [3]	Fuse-line (A/ type)	Boiler connection diagram [5]		Wiring diagram [5]	
										Unit URxxxxxx03	Unit URxxxxxxU3	Unit URxxxxxx03	Unit URxxxxxxU3
UR002	2.0 **(4.4)**	2.0	U	208	1 x 2012	–	9.7	2.5	10 / rapid	-	Fig. 16a	-	Fig. 15.a
	2.0 **(4.4)**	2.0	D	230	1 x 1952	–	8.5	2.5	10 / rapid	Fig. 16a	Fig. 16a	Fig. 15.b	Fig. 15.a
UR004	4.0 **(8.8)**	3.6	U	208	1 x 3605	–	17.3	2.5	25 / rapid	-	Fig. 16a	-	Fig. 15.a
	4.0 **(8.8)**	3.3	D	230	1 x 3306	–	14.4	2.5	20 / rapid	Fig. 16a	Fig. 16a	Fig. 15.b	Fig. 15.a
UR006	6.0 **(13.2)**	4.8	U	208	3 x 1597	–	23	6	32 / rapid	-	Fig. 16b	-	Fig. 15.c
	6.0 **(13.2)**	4.7	D	230	3 x 1555	–	20.3	6	25 / rapid	Fig. 16b	Fig. 16b	Fig. 15.d	Fig. 15.c
	6.0 **(13.2)**	4.8	W	208	3 x 1597	Δ	3 x 13.3	2.5	16 / rapid	-	Fig. 16d	-	Fig. 15.e
	6.0 **(13.2)**	4.7	K	230	3 x 1555	Δ	3 x 11.7	2.5	16 / rapid	Fig. 16d	Fig. 16d	Fig. 15.f	Fig. 15.e
	6.0 **(13.2)**	4.7	L	400	3 x 1568	Y	3 x 6.8	2.5	10 / rapid	Fig. 16c	Fig. 16c	Fig. 15.f	Fig. 15.e
	6.0 **(13.2)**	4.8	M	460	3 x 2500	Y	3 x 6.0	2.5	10 / rapid	-	Fig. 16c	-	
	6.0 **(13.2)**	4.8	N	575	3 x 1600	Y	3 x 4.8	2.5	10 / rapid	-	Fig. 16c	-	
UR010	10.0 **(22)**	8.1	W	208	3 x 2703	Δ	3 x 22.5	6	32 / rapid	-	Fig. 16d	-	Fig. 15.e
	10.0 **(22)**	7.4	K	230	3 x 2460	Δ	3 x 18.5	6	25 / rapid	Fig. 16d	Fig. 16d	Fig. 15.f	Fig. 15.e
	10.0 **(22)**	7.4	L	400	3 x 2480	Y	3 x 10.7	2.5	16 / rapid	Fig. 16c	Fig. 16c	Fig. 15.f	Fig. 15.e
	10.0 **(22)**	7.8	M	460	3 x 2603	Y	3 x 9.8	2.5	16 / rapid	Fig. 16c	Fig. 16c	Fig. 15.f	Fig. 15.e
	10.0 **(22)**	7.5	N	575	3 x 2500	Y	3 x 7.5	2.5	10 / rapid	-	Fig. 16c	-	
UR013	13.0 **(28.6)**	9.9	K	230	3 x 3306	Δ	3 x 25	6	32 / rapid	Fig. 16d	Fig. 16d	Fig. 15.f	Fig. 15.e
	13.0 **(28.6)**	10.0	L	400	3 x 3333	Y	3 x 14.4	2.5	20 / rapid	Fig. 16c	Fig. 16c	Fig. 15.f	Fig. 15.e
	13.0 **(28.6)**	9.8	M	460	3 x 3280	Y	3 x 12.4	2.5	16 / rapid	Fig. 16c	Fig. 16c	Fig. 15.f	Fig. 15.e
	13.0 **(28.6)**	9.7	N	575	3 x 3240	Y	3 x 9.8	2.5	16 / rapid	-	Fig. 16c	-	Fig. 15.e
UR020	20.0 **(44)**	16.2	W	208	3 x 5407	Δ	3 x 45.0	16	60 / rapid	-	Fig. 16f	-	Fig. 15.g
	20.0 **(44)**	15.1	K	230	3 x 5038	Δ	3 x 37.9	16	60 / rapid	Fig. 16f	Fig. 16f	Fig. 15.h	Fig. 15.g
	20.0 **(44)**	15.2	L	400	3 x 5079	Y	3 x 22.0	6	32 / rapid	Fig. 16e	Fig. 16e	Fig. 15.h	Fig. 15.g
	20.0 **(44)**	15.1	M	460	3 x 5022	Y	3 x 18.9	6	25 / rapid	Fig. 16e	Fig. 16e	Fig. 15.h	Fig. 15.g
	20.0 **(44)**	15.0	N	575	3 x 5008	Y	3 x 15.1	6	20 / rapid	-	Fig. 16e	-	Fig. 15.g
UR027	27.0 **(59.5)**	19.8	K	230	3 x 6612	Δ	3 x 49.8	16	60 / rapid	Fig. 16f	Fig. 16f	Fig. 15.h	Fig. 15.i
	27.0 **(59.5)**	20.0	L	400	3 x 6666	Y	3 x 28.9	10	50 / rapid	Fig. 16e	Fig. 16e	Fig. 15.h	Fig. 15.g
	27.0 **(59.5)**	20.2	M	460	3 x 6717	Y	3 x 25.3	6	32 / rapid	Fig. 16e	Fig. 16e	Fig. 15.h	Fig. 15.g
	27.0 **(59.5)**	19.8	N	575	3 x 6599	Y	3 x 19.9	6	25 / rapid	-	Fig. 16e	-	Fig. 15.g
UR040	40.0 **(88)**	30.5	L	400	6 x 5079	Y	3 x 44.0	16	50 / rapid	Fig. 16g	Fig. 16h	Fig. 15.k	Fig. 15.j
	40.0 **(88)**	30.1	M	460	6 x 5022	Y	3 x 37.8	16	50 / rapid	Fig. 16g	Fig. 16h	Fig. 15.k	Fig. 15.j
	40.0 **(88)**	30.0	N	575	6 x 5008	Y	3 x 30.2	10	50 / rapid	-	Fig. 16h	-	Fig. 15.j
UR053	53.0 **(117)**	40.0	L	400	6 x 6666	Y	3 x 57.7	25	80 / rapid	Fig. 16i	Fig. 16i	Fig. 15.k	Fig. 15.l
	53.0 **(117)**	40.3	M	460	6 x 6717	Y	3 x 50.6	16	60 / rapid	Fig. 16i	Fig. 16i	Fig. 15.k	Fig. 15.l
	53.0 **(117)**	39.6	N	575	6 x 6599	Y	3 x 39.8	16	60 / rapid	-	Fig. 16j	-	Fig. 15.j
UR060	60.0 **(132)**	45.7	L	400	9 x 5079	Y	3 x 66	25	80 / rapid	Fig. 16k	Fig. 16l	Fig. 15.o	Fig. 15.n
	60.0 **(132)**	45.2	M	460	9 x 5022	Y	3 x 56.7	25	80 / rapid	Fig. 16k	Fig. 16l	Fig. 15.o	Fig. 15.n
	60.0 **(132)**	45.1	N	575	9 x 5008	Y	3 x 45.3	16	50 / rapid	-	Fig. 16k	-	Fig. 15.m
UR080	80.0 **(176)**	60.0	L	400	9 x 6666	Y	3 x 86.6	50	125 / rapid	Fig. 16l	Fig. 16m	Fig. 15.o	Fig. 15.p
	80.0 **(176)**	60.5	M	460	9 x 6717	Y	3 x 75.9	35	100 / rapid	Fig. 16l	Fig. 16m	Fig. 15.o	Fig. 15.p
	80.0 **(176)**	59.4	N	575	9 x 6599	Y	3 x 59.6	25	80 / rapid	-	Fig. 16m	-	Fig. 15.p

Tab. 16.a

(1) tolerance allowed on rated mains voltage: -15%, +10%;
(2) tolerance on rated values: +5%, -10% (EN 60335-1);
(3) when sizing the power cables, always refer to local regulations in force. The humidifier's power line must feature a disconnect switch and fuse protecting against short-circuits, to be fitted by the installer;
(4) instant max nominal steam output: the average steam production may be influenced by external factors such as: room temperature, water quality, steam distribution system;
(5) please refer to the wiring diagrams

The data are not absolute and may not comply with the local standards, which should prevail.

16.2 Electrical connection of boiler heaters

The cable end should be coupled to the top nut applying a torque equal to 3 N · m.

Single-phase
2-4 kg/h 208-230 V

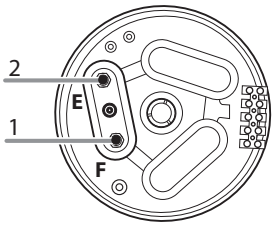

Fig. 16.a

Single-phase
6 kg/h 208-230 V

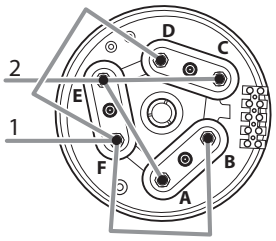

Fig. 16.b

Three-phase - STAR
6 kg/h 400 V
10 kg/h 400-460 V
13 kg/h 400-460-575 V

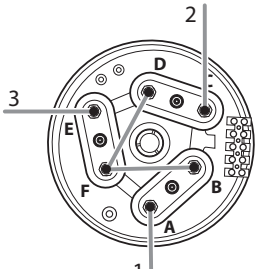

Fig. 16.c

Three-phase - TRIANGLE
6 kg/h 208-230 V
10 kg/h 208-230 V
13 kg/h 230 V

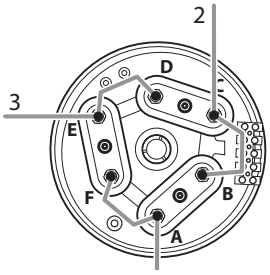

Fig. 16.d

Three-phase - STAR
20-27 kg/h 400-460-575 V

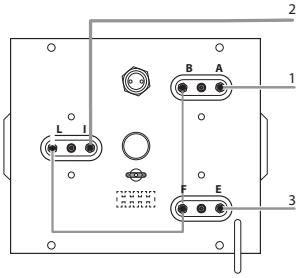

Fig. 16.e

Three-phase - STAR
20-27 kg/h 400-460-575 V

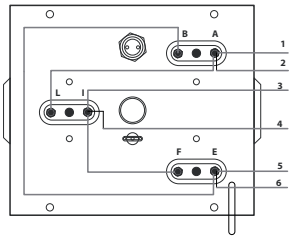

Fig. 16.e_1

Three-phase - STAR
53 kg/h 400-460 V

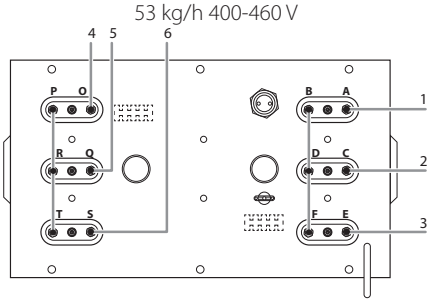

Fig. 16.f

Three-phase - STAR
53 kg/h 575 V

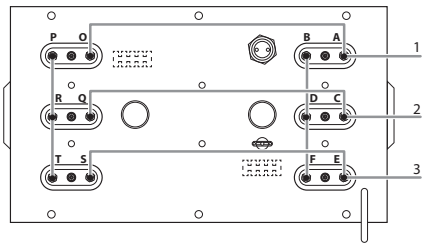

Fig. 16.g

Three-phase - TRIANGLE
20-27 kg/h 208-230 V

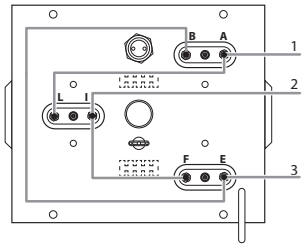

Fig. 16.h

Three-phase - STAR
60 kg/h 460 V
80 kg/h 400 V

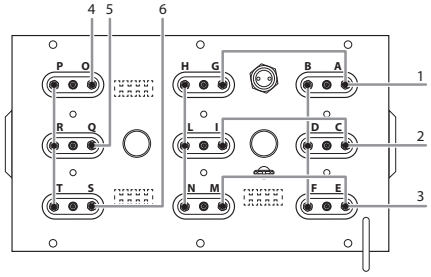

Fig. 16.i

Three-phase - STAR
60 kg/h 400-575V

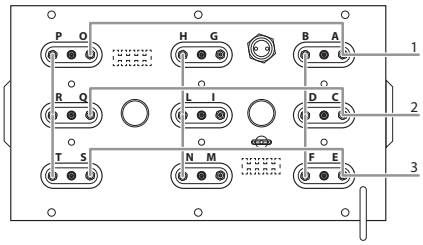

Fig. 16.j

Three-phase - STAR
40 kg/h 400 V

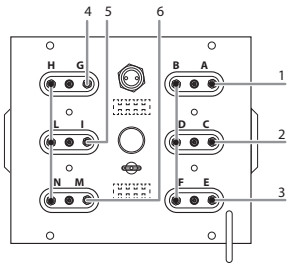

Fig. 16.k

Three-phase - STAR
40 kg/h 460-575 V

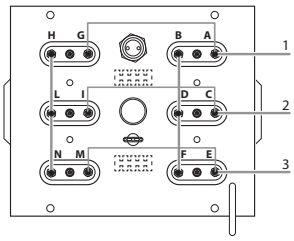

Fig. 16.l

Three-phase - STAR
80 kg/h 460-575 V

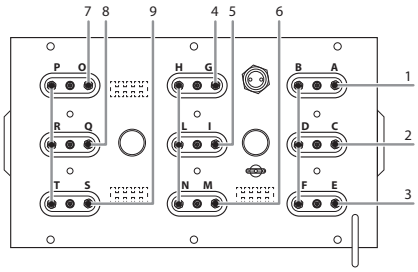

Fig. 16.m

Key window

1-2-3-4 - 5-6-7-8-9	three-phase power supply terminals
1-2	single-phase power supply terminals

16.3 Technical features

	model										
	UR002	UR004	UR006	UR010	UR013	UR020	UR027	UR040	UR053	UR060	UR080
Number of heaters	1	1	3	3	3	6	6	6	6	9	9
steam											
Connection Ø mm (in)	30 (1.2)					40 (1.6)			2 x 40 (2x1.6)		
delivery pressure limits Pa (PSI)	0…1500 (0...0,218)					0...2000 (0...0.290)					
supply water											
connection	3/4" G										
temperature limits °C (°F)	1...40 (33.8...104)										
pressure limits (MPa)	0.1...0.8 (1...8 bar)										
hardness limits (°fH)	≤ 40										
instant flow rate (l/min - Gallon/min)	1.1	1.1	1.1	1.1	1.1	4	4	4	10	10	10
drain water											
Connection Ø mm (in)	40 (1.6)					50 (2)					
typical temperature °C (°F)	≤100										
instant flow rate (l/min - Gallon/min)	5 (50 Hz) - 9 (60 Hz) (1.3 - 2.3)					17.5 (50 Hz) - 24.3 (60 Hz) (4.6 - 6.4)					
drain tempering instant flow rate (l/min - Gallon/min)*	23 (60Hz) (6)					54,3 (60Hz) (14.3)					
* where needed											
environmental conditions											
room operating temperature °C (°F)	1...40 (33.9...104)										
room operating humidity (% rH)	10...60										
storage temperature °C (°F)	-10...70 (33.8...158)										
storage humidity (% rH)	5…95										
protection rating	IP20										
system											
type	c.pHC										
voltage / auxiliary frequency (V / Hz)	24 / 50/60										
maximum auxiliary power (VA)	90										
probe inputs (general characteristics)	selectable input signal: 0…1 Vdc, 0…10 Vdc, 2…10 Vdc, 0…20 mA, 4…20 mA										
	input impedance: 60 kΩ with signals: 0…1 Vdc, 0…10 Vdc, 2…10 Vdc										
	50 Ω with signals: 0…20 mA, 4…20 mA										
power supply for active probes (general features)	24 Vdc (24 Vac rectified), Imax= 250 mA										
	12 Vdc 5%, Imax= 50 mA										
alarm relay outputs (general features)	250 V 2 A (2 A)										
	type of micro-switching action 1C										
remote enabling input (general characteristics)	dry contact; max resistance 50 Ω; Vmax=24 Vdc; Imax=5 mA										
serial communication	three-lead RS485 / Fieldbus / BMS										
USB port	USB type A										
Ethernet port	Ethernet										

Tab. 16.l

16.4 Steam transport pipe models

humidifier model:	UR002	UR004	UR006	UR010	UR013	UR020	UR027	UR040	UR053	UR060	UR080
ø of steam outlet mm (in):	30 (1.2")					40 (1.6")			2x40 (1.6")		
maximum capacity kg/h (lb/h):	"2 (4.4)"	"4 (8.8)"	"6 (13.2)"	"10 (22)"	"13 (28.6)"	"20 (44)"	"27 (59.5)"	"40 (88)"	"53 (116.8)"	"60 (132.2)"	"80 (176.36)"
1312365AXX	√	√	√	√	√						
1312367AXX						√	√	√	√	√	√
ONLY FOR NORTH AMERICA MARKET											
SHOSE00030	√	√	√	√	√						
SHOSE00040						√	√	√	√	√	√

Tab. 16.m

16.5 Steam nozzle models

		humidifier model:	UR002	UR004	UR006	UR010	UR013	UR020	UR027	UR040	UR053	UR060	UR080
		ø of steam outlet mm (in):	30 (1.2")					40 (1.6")			2x40 (1.6")		
		maximum capacity kg/h (lb/h):	2 (4.4)	4 (8.8)	6 (13.2)	10 (22)	13 (28.6)	20 (44)	27 (59.5)	40 (88)	53 (116.8)	60 (132.2)	80 (176.36)
"inlet diameter nozzle ø mm (in)"	maximum capacity nozzle kg/h (lb/h)	code											
30 (1.2")	18 (39.7)	SDPOEM0022	1	1	1	1	1	1	(2)*				
30 (1.2")	"18 (39.7)												
with hole of 30 (1.2")	SDPOEM0000	1	1	1	1	1	1	(2)*	(4)*	(4)*	(4)*		

Tab. 16.n

*: use Y-type CAREL kit code UEKY000000, inlet 40mm (1.6") and 2 outlets 30mm (1.2")
**: use Y-type CAREL kit code UEKY40X400, inlet 40mm (1.6") and 2 outlets 40mm (1.6")

16.6 Linear nozzle models and typical installations

			humidifier model:	UR002	UR004	UR006	UR010	UR013	UR020	UR027	UR040	UR053	UR060	UR080
			ø of steam outlet mm (in):	30 (1.2")					40 (1.6")			2x40 (1.6")		
			maximum capacity kg/h (lb/h):	2 (4.4)	4 (8.8)	6 (13.2)	10 (22)	13 (28.6)	20 (44)	27 (59.5)	40 (88)	53 (116.8)	60 (132.2)	80 (176.36)
"nozzle steam inlet ø mm (in)"	maximum nozzle capacity kg/h (lb/h)	length of nozzle mm (in)	code											
30 (1.2")	5 (11)	350 (13.7)	DP035D30R0	1	1									
30 (1.2")	8 (17.6)	450 (17.7)	DP045D30R0	1	1	1								
30 (1.2")	12 (26.4)	600 (23.6)	DP060D30R0		1	1	1		(2)*					
30 (1.2")	18 (39.6)	850 (33.5)	DP085D30R0		1	1	1	1	(2)*	(2)*				
30 (1.2")	18 (39.6)	1050 (41.3)	DP105D30R0		1	1	1	1	(2)*	(2)*				
30 (1.2")	18 (39.6)	1250 (49.2)	DP125D30R0		1	1	1	1	(2)*	(2)*				
30 (1.2")	18 (39.6)	1650 (65)	DP165D30R0				1	1	(2)*	(2)*				
30 (1.2")	15 (33)	300 (11.8)	DP030D30RU	1	1	1	1	1						
30 (1.2")	15 (33)	450 (17.7)	DP045D30RU	1	1	1	1	1	(2)*	(2)*				
30 (1.2")	15 (33)	600 (23.6)	DP060D30RU		1	1	1	1	(2)*	(2)*				
40 (1.6")	25 (55)	850 (33.5)	DP085D40R0						1	1	(2)**	(4)**	(4)**	(4)**
40 (1.6")	35 (77)	1050 (41.3)	DP105D40R0						1	1	(2)**	2	2	(4)**
40 (1.6")	45 (99)	1250 (49.2)	DP125D40R0						1	1	1	2	2	2
40 (1.6")	45 (99)	1650 (65)	DP165D40R0							1	1	2	2	2
40 (1.6")	45 (99)	2050 (80.7)	DP205D40R0								1	2	2	2
40 (1.6")	45 (99)	600 (23.6)	DP060D40RU						1	1	1	2	2	2

Tab. 16.o

(*) use CAREL "Y" kit P/N UEKY000000, 40 mm (1.6") inlet and 2 x 30 mm (1.2") outlets
(**) use CAREL "Y" kit P/N UEKY40X400, 40 mm (1.6") inlet and 2 x 40 mm (1.6") outlets

For typical installations of linear distibutors see Fig. 8.a.

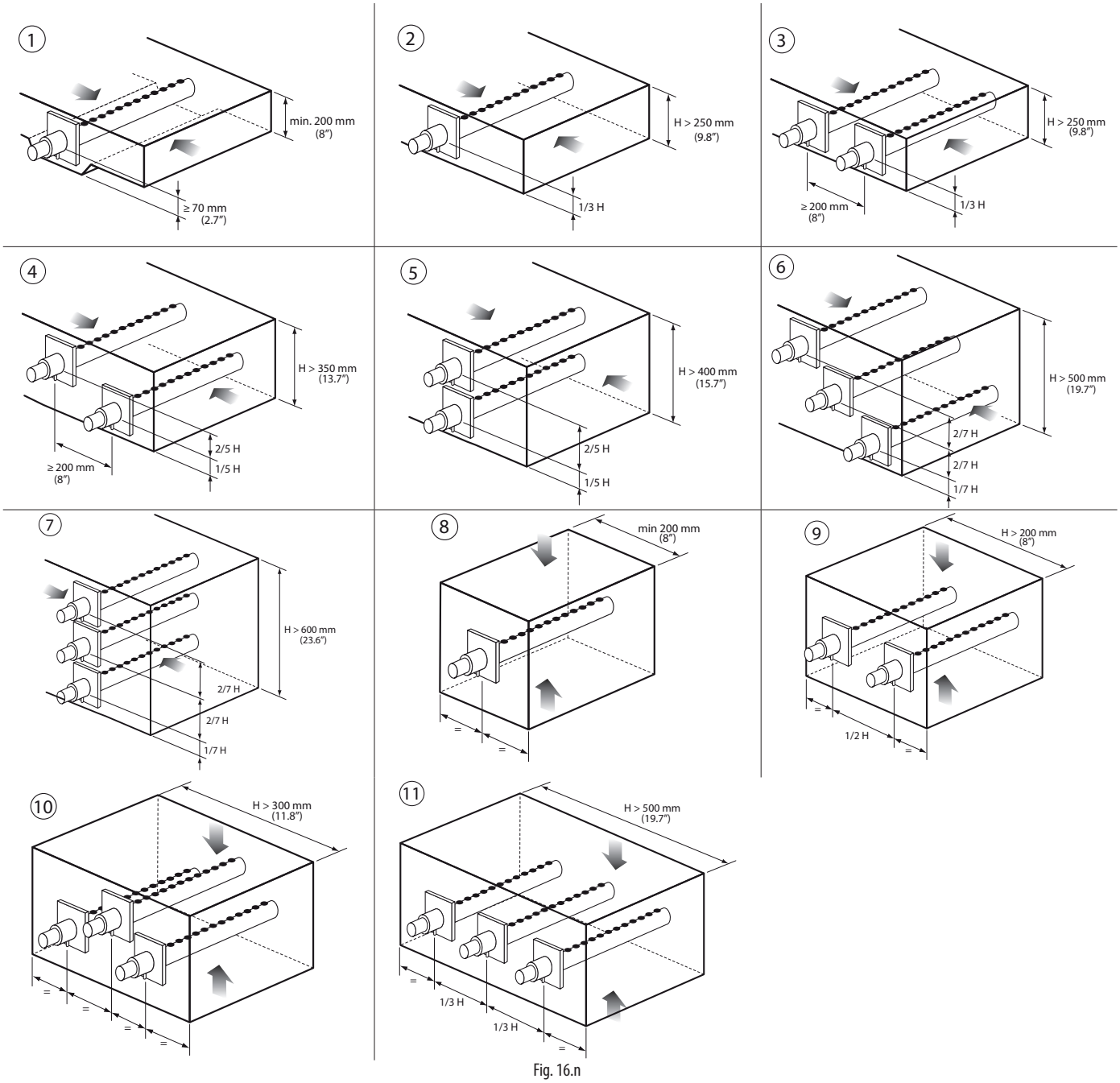

Fig. 16.n

Note

CAREL INDUSTRIES HQs
Via dell'Industria, 11 - 35020 Brugine - Padova (Italy)
Tel. (+39) 0499 716611 - Fax (+39) 0499 716600
carel@carel.com - www.carel.com

Agenzia:

"heaterSteam" +0300080EN - rel. 1.4 - 05.02.2018