Rotary actuator for butterfly valves

- Torque motor 90 Nm
- Nominal voltage AC 24...240 V / DC 24...125 V
- Control Open/close, 3-point
- With 2 integrated auxiliary switches

Picture may differ from product

Technical data

Electrical data	Nominal voltage	AC 24...240 V / DC 24...125 V
	Nominal voltage frequency	50/60 Hz
	Nominal voltage range	AC 19.2...264 V / DC 19.2...137.5 V
	Power consumption in operation	20 W
	Power consumption in rest position	7 W
	Power consumption for wire sizing	with 24 V 20 VA / with 240 V 55 VA
	Auxiliary switch	2x SPDT, 1x 10° / 1x 0...90° (default setting 85°)
	Switching capacity auxiliary switch	1 mA...3 A (0.5 A inductive), DC 5 V...AC 250 V
	Connection protective earth	Terminals 0.5...2.5 mm^2, copper conductors only
	Connection supply / control	Terminals 0.5...2.5 mm^2, copper conductors only
	Connection auxiliary switch	Terminals 0.5...2.5 mm^2, copper conductors only
	Parallel operation	Yes (note the performance data)
Functional data	Torque motor	90 Nm
	Manual override	hand crank
	Running time motor	35 s / 90°
	Running time motor variable	20...120 s
	Sound power level, motor	65 dB(A)
	Position indication	Mechanical, integrated
Safety data	Protection class IEC/EN	I, protective earth (PE)
	Protection class UL	I, protective earth (PE)
	Power source UL	Class 2 Supply
	Degree of protection IEC/EN	IP66/67
	Degree of protection NEMA/UL	NEMA 4X
	Housing	UL Enclosure Type 4X
	EMC	CE according to 2014/30/EU
	Low voltage directive	CE according to 2014/35/EU
	Certification IEC/EN	IEC/EN 60730-1 and IEC/EN 60730-2-14
	UL Approval	cULus according to UL60730-1A, UL60730-2-14 and CAN/CSA E60730-1 The UL marking on the actuator depends on the production site, the device is UL-compliant in any case

Technical data

Safety data	Type of action	Type 1
	Overvoltage category	III
	Rated impulse voltage auxiliary switch	4 kV
	Pollution degree	3
	Ambient humidity	Max. 100% RH
	Ambient temperature	-30...50°C [-22...122°F]
	Storage temperature	-40...80°C [-40...176°F]
	Software Class	A
	Servicing	maintenance-free
Mechanical data	Connection flange	F07 (F05/F10 only with accessory)
Weight	Weight	3.7 kg

Safety notes

- This device has been designed for use in stationary heating, ventilation and air-conditioning systems and must not be used outside the specified field of application, especially in aircraft or in any other airborne means of transport.
- Caution: Mains voltage!
- The device has a protective earthing. Incorrect connection of the protective earth can lead to hazards due to electrical shock.
- Only authorised specialists may carry out installation. All applicable legal or institutional installation regulations must be complied with during installation.
- Apart from the wiring compartment, the device may only be opened at the manufacturer's site. It does not contain any parts that can be replaced or repaired by the user.
- The device is not designed for applications where chemical influences (gases, fluids) are present or for utilisation in corrosive environments in general.
- The device contains electrical and electronic components and must not be disposed of as household refuse. All locally valid regulations and requirements must be observed.
- The two switches integrated in the actuator are to be operated either on mains voltage or on safety extra-low voltage. The combination mains voltage/safety extra-low voltage is not permitted.
- In case of maintenance work on the hydronic system, the correct valve position must be set via the control signal. Additionally, the actuator has to be disconnected from the power supply. The hand crank and manual override must not be used as a safety measure to maintain the set valve position.

Product features

Fields of application

The actuator is particularly suitable for utilisation in outdoor applications and is protected against the following weather conditions:
- UV radiation
- Dirt / Dust
- Rain / Snow
- Air humidity

Internal heating

An internal heater prevents condensation buildup.

Thanks to the integrated temperature and humidity sensor, the built-in heater automatically switches on/off.

Configurable device

The factory settings cover the most common applications.

Belimo Assistant 2 is required for configuration via Near Field Communication (NFC) and simplifies commissioning. Moreover, Belimo Assistant 2 provides a variety of diagnostic options.

Product features

Simple direct mounting
Simple direct mounting on the butterfly valve. The mounting orientation in relation to the butterfly valve can be selected in 90° (angle) increments.

Manual override
The valve can be manually operated using a hand crank. Unlocking is carried out manually by removing the hand crank.

High functional reliability
The actuator is overload protected, requires no limit switches and automatically stops when the end stop is reached.

Innovative motorisation
The actuator uses the powerful Belimo M600 microchip in combination with the INFORM method. It provides the full starting torque from a standstill with high precision (sensorless INFORM-Drive by Prof. Schrödl).

Flexible signalling
The actuator has one auxiliary switch with a fixed setting (10°) and one adjustable auxiliary switch (0...90°).

Accessories

Tools

Description	Type
Service tool for wired and wireless setup, on-site operation and troubleshooting.	Belimo Assistant 2
Belimo Assistant Link Bluetooth and USB to NFC and MP-Bus converter for configurable and communicative devices	LINK.10

Mechanical accessories

Description	Type
Position indicator and tappet shaft, F07, square 45° offset, SW 17, DN 125...150	ZJR01
Position indicator and tappet shaft, F05, square 45° offset, SW 14, DN 50...100	ZJR03
Tappet shaft, F07, square 45° offset, SW 17	ZPR02
RetroFIT+ adapter kit, F07/F10 (incl. screws F07), flat head/square, SW 17	ZPR05
RetroFIT+ adapter kit, F07/F10 (incl. screws F07), square 45° offset, SW 14	ZPR06
Adapter kit with spacer ring, F07, square 45° offset, SW 17	ZPR08
RetroFIT+ adapter kit, F07/F05/F10 (incl. screws F07), flat head/square, SW 14	ZPR09
RetroFIT+ adapter kit, F05/F07/F10 (incl. screws F05), flat head/square, SW 14	ZPR10
RetroFIT+ adapter kit, F07/F10 (incl. screws F07), square 45° offset, SW 18	ZPR11
RetroFIT+ adapter kit, F07/F10 (incl. screws F07), flat head/square, SW 16	ZPR12
RetroFIT+ adapter kit, F07/F05/F10 (incl. screws F07), flat head/square, SW 11	ZPR13
RetroFIT+ adapter kit, F07/F05/F10 (incl. screws F07), flat head/square, SW 12.7	ZPR14
RetroFIT+ adapter kit, F07/F10 (incl. screws F07), square 45° offset, SW 11	ZPR15
Hand crank for JR actuator	ZJR20
Spacer ring, F04/F05, Height 22 mm	ZRI-001
Spacer ring, F05/F07, Height 23.5 mm	ZRI-002

Electrical installation

Caution: Mains voltage!

Parallel connection of other actuators possible. Observe the performance data.

Electrical installation

AC 24...240 V / DC 24...125 V

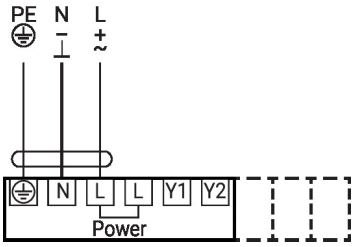

Control open/close

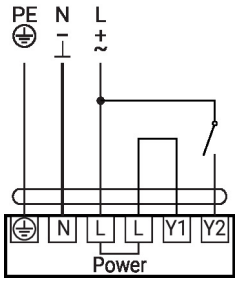

Control open/close

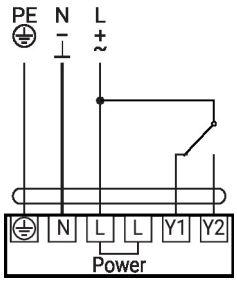

Control 3-point

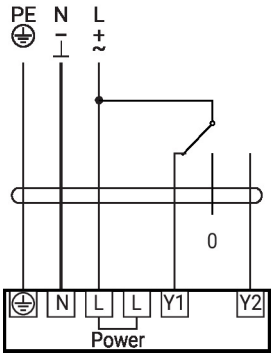

Auxiliary switch

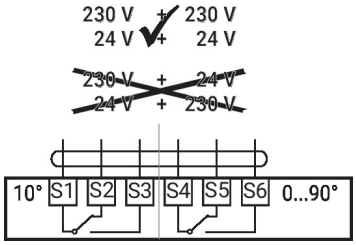

Operating controls and indicators

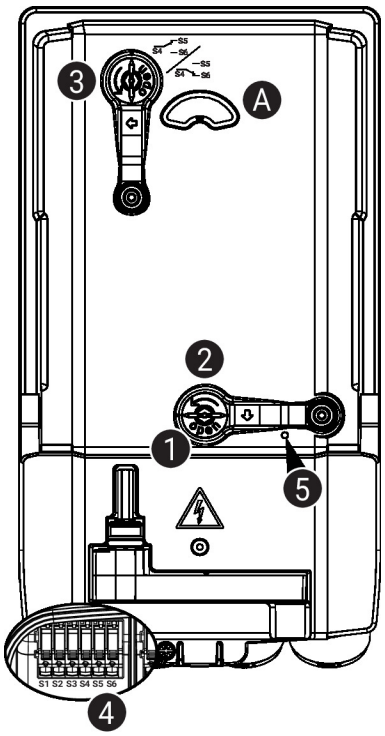

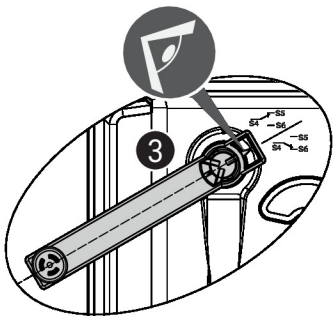

5 LED display green

Off: No power supply or malfunction
On: In operation

Auxiliary switch settings

> ⚠ **Note:** Perform settings on the actuator only in deenergised state.

For the auxiliary switch position settings, carry out points 1 to 4 successively.

1 Gear train disengagement
Opening the manual override cover and adjusting the hand crank.
Manual override is possible.

2 Manual override
Turn the hand crank until the desired switching position A is indicated and then remove the hand crank.

3 Auxiliary switch
For the auxiliary switch position settings, carry out points 1 to 4 successively.
Opening the auxiliary switch adjustment cover and adjusting the hand crank.
Turn the hand crank until the arrow points to the line.

4 Terminals
Connect continuity tester to S4 + S5 or to S4 + S6.
If the auxiliary switch should switch in the opposite direction, rotate the hand crank by 180°.

Service

Wireless connection

Belimo devices marked with the NFC logo can be operated with Belimo Assistant 2.

Requirement:

- NFC- or Bluetooth-capable smartphone
- Belimo Assistant 2 (Google Play and Apple AppStore)

Align NFC-capable smartphone on the device so that both NFC antennas are superposed.

Connect Bluetooth-enabled smartphone via the Bluetooth-to-NFC converter ZIP-BT-NFC to the device. Technical data and operating instructions are shown in the ZIP-BT-NFC data sheet.

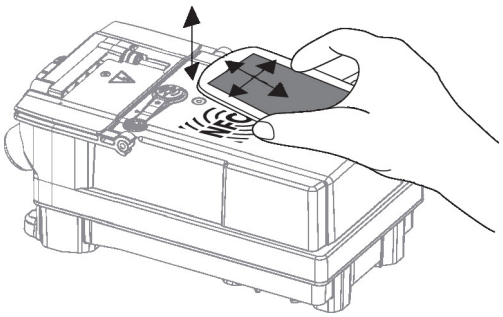

Dimensions

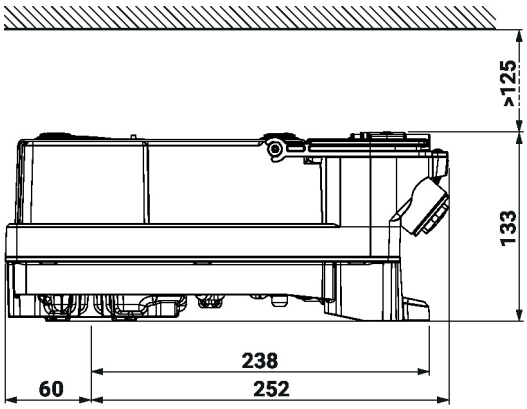

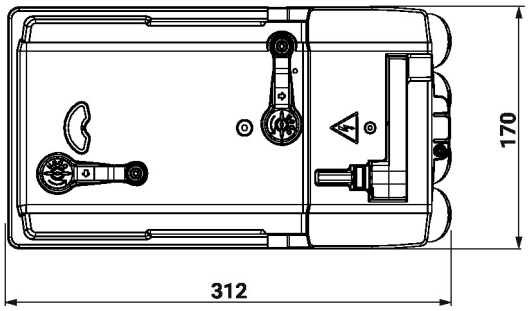

Further documentation

- The complete product range for water applications
- Data sheets for butterfly valves
- Installation instructions for actuators and/or butterfly valves
- General notes for project planning
- Quick Guide – Belimo Assistant 2