ENGINEERING
TOMORROW

Data sheet

Actuator for modulating & 3-point control
AME 685 – without safety function

Description

The actuator is designed to control the valve in response to the demand of a controller in District Heating/cooling, Heating, Ventilating and Air conditioning systems.

The AME 685 can be controlled by electronic controllers with modulating or 3-point control output.

Actuator can be used in combination with:
Valve type VF 3 (DN 200-300)

Features:
- Manual operation mechanical and/or electrical
- Position indication, LED signalization
- Selectable speed 2,7 or 6 s/mm
- Automatic adaptation of stroke to valve's end positions that reduces commissioning time (*self stroking*)
- Integrated auxiliary switch
- Characteristic optimization
- Adjustable stroke limitation
- Anti-oscillation function
- Pulse or continuous output signal (*4 & 5*)
- Voltage or current output signal X
- External reset button
- Auto detection of Y signal
- 3-point or modulating control selection
- Galvanic insulation Y & X and output terminal (*4 & 5*)
- Thermal and overload protection
- Precise control and fast response in 3-point mode (*0,01 s*)

Main data:
- Nominal voltage (*AC or DC*):
  - 24 V, 50 Hz/60 Hz
  - 230 V, 50 Hz/60 Hz
- Control input signal: modulating or 3-point
- Force: 5000 N
- Stroke: 80 mm
- Speed (*selectable*): 2,7 or 6 s/mm
- Max. medium temperature: 200 °C

Ordering

Actuator

Picture	Type	Power supply (V)	Code No.
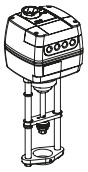	AME 685	24	**082G3500**
		230	**082G3501**

Accessories - **Stem heater**

Type	DN	Code No.
Stem heater for VF3 valve	200-300	**065Z7021**

Technical data

Please check power supply and power consumption prior connection!

Power supply	V	24 or 230; +10 … −15 %; AC or DC
Power consumption	VA	35 (24 V) 50 (230 V)
Signal	mA	10
Frequency	Hz	50/60
Control input Y	V	0-10 (2-10) [Ri = 100 kΩ]
	mA	0-20 (4-20) [Ri = 500 Ω]
		3-point (wiring auto-detection)
Control output X	V	0-10 (2-10) [Ri = 2 kΩ]
	mA	0-20 (4-20) [Ri = 550 Ω]
Closing force	N	5000
Max. stroke	mm	80
Speed (selectable)	s/mm	2,7 or 6
Max. medium temperature	°C	200
Ambient temperature		0 … + 55
Storage and transport temperature		−40 … +70 (storing for 3 days)
Humidity		5-95%
Protection class		II
Grade of enclosure		IP 54
Weight	kg	7,5
Manual operation		Electrical and mechanical
Power failure response		Stem remains in last position
CE - marking in accordance with the standards		Low Voltage Directive 2006/95/EEC EMC Directive 2004/108/EEC

Disposal

The actuator must be dismantled and the elements sorted into various material groups before disposal.

Before disassembly please contact Danfoss support for disassembly instructions.

Commissioning

Complete the mechanical and electrical installation (*see instructions*) and perform the necessary checks and tests:

- Turn on the power
- Set the appropriate control signal and check that the valve stem direction is correct for the application.

The unit is now fully commissioned.

Design

1. Manual operation knob
2. Function buttons
3. Service cover
4. Removable gland support
5. End position indication ring
6. Stem connector
7. Valve connector (*yoke*)

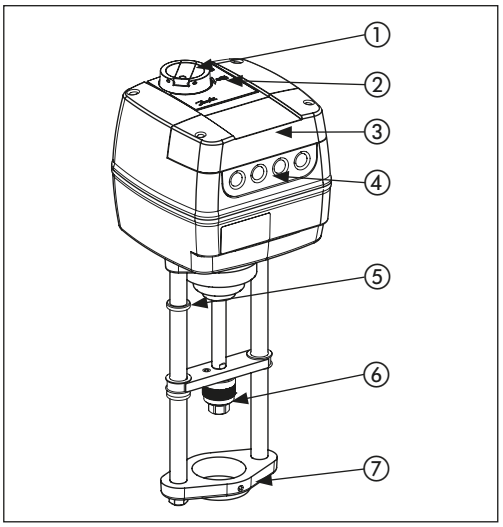

Installation

Mechanical

Please check the allowed installation positions for the valve and actuator. The actuator can be installed in following positions (*see below*).

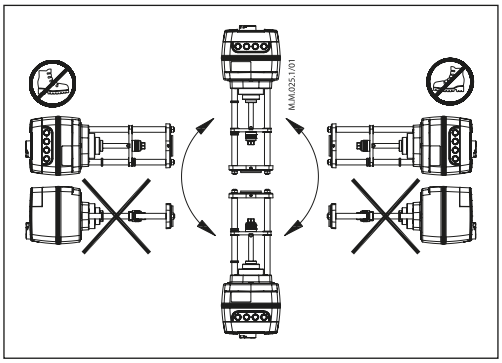

Use hook spanner NH10 key (*not supplied*) to fit the actuator to the valve body. Allow for necessary clearance for maintenance purposes. To link valve and actuator stems use a 20 mm wrench key and 5 mm Allen key (*not supplied*).

The actuator has position indication rings which should be pushed together before electrical connection; after self-stroking they indicate end positions of the stroke.

Electrical connection

Electrical connections can be accessed by removing the service cover.

Four cable entries on removable gland support are provided for M 16×1,5 or M 20×1,5 cable glands. Note that in order to maintain the enclosure's IP rating, appropriate cable glands must be used.

Wiring

Do not touch anything on the PCB! Do not remove the service cover before the power supply is fully switched off.
Max. allowed current output on terminals 4 and 5 is 4A.
Min. power is 3W.

Recommended cross-sectional area of the wiring is 1.5 mm²

AME 685 *wiring for modulating mode*

Note: see signal load data at fix power supply

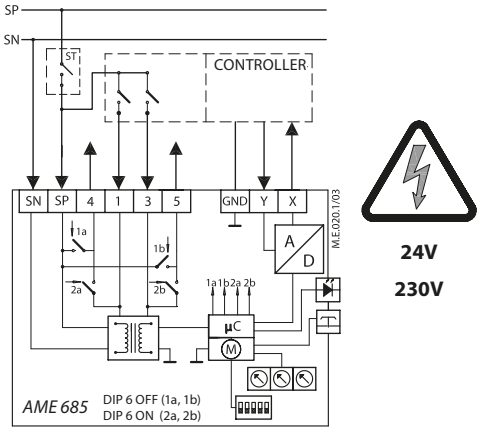

24V

230V

SN	0 V		Neutral
SP	24, 230 V AC/DC		Power supply
4, 5	SP(AC)	SP → 4, 5	SP output -max 4A -min 3W
1	SP	INV, ON 2, DIR	Input
3	SP	INV, ON 2, DIR	
GND	0 V		Neutral
Y	0(2)-10 V		Input
	0(4)-20 mA		
X	0(2)-10 V		Output
	0(4)-20 mA		

AME 685 *wiring for 3-point floating mode*

Note: see power consumption

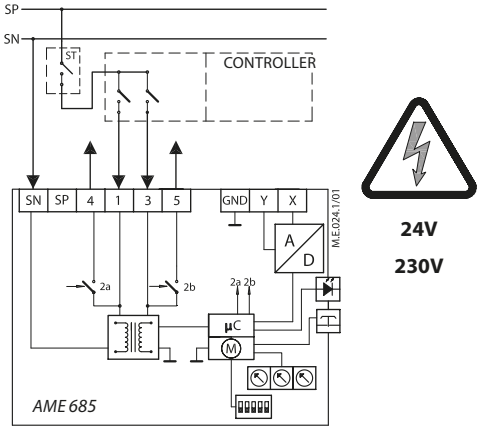

24V

230V

SN	0 V		Neutral
1,3	24, 230 V AC/DC		Power supply
4, 5	SP(AC)	1 → 4, 3 → 5	SP output -max 4A -min 3W
1	SP	INV, ON 2, DIR	Input
3	SP	INV, ON 2, DIR	

Actuator operating modes

LED operating mode indicator
The three-colour (*green/yellow/red*) LED function indicators are located on the actuator cover. They indicate different operating modes.

RESET button
Actuator have external RESET button which is located on top cover of the actuator next to LED indicators. With this button you can enter or exit Stand-By mode (*press once*) or Self stroking mode (*press and hold for 5 seconds*). See next paragraph for mode details.

Operating modes

- **Self stroking mode**
  Self stroking mode starts automatically the first time when power supply is applied to the actuator. To start self stroking procedure **press and hold RESET button for 5 seconds** until the green light starts flashing. End positions of the valve are automatically set and the actuator goes to stationary mode and starts responding to the control signal.
- **Stand-By mode**
  Press the RESET button for 1 sec. to enter Stand-By mode. The actuator stops in current position and stops responding to any control signal. Red light is constantly lit. You can manually operate the actuator with mechanical handle or control buttons. This mode can be very useful during the commissioning of other equipment, or for service purposes. In this mode you can also set positions of the additional switches. To exit Stand-By mode press the RESET button again.
- **Positioning mode**
  The actuator is operating automatically. The stem is extending or retracting according to the control signal. When positioning is finished the actuator goes to stationary mode. If for one or another reason 3-point signal (*terminals 1 and 3*) and Y signal would be present at the same time, 3-point signal would prevail.
- **Stationary mode**
  The actuator is operating without errors.
- **Error mode**
  Working temperature is too high - check the ambient temperature.
  Stroke is too short - check the connection with valve and valve operation, or check if valve is blocked.

LED signalling

LED	Indication type			Operating mode
Green LED:			Constantly lit	Positioning mode - Actuator is retracting the stem
			Constantly lit	Positioning mode - Actuator is extending the stem
	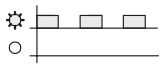		Flashing (1 s cycle)	Self stroking mode - Actuator is retracting the stem
			Flashing (1 s cycle)	Self stroking mode - Actuator is extending the stem
Yellow LED:	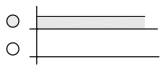		Constantly lit	Stationary mode - Actuator has reached upper end position (retracted stem)
			Constantly lit	Stationary mode - Actuator has reached bottom end position (extended stem)
		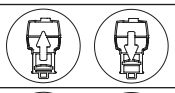	Flashing	Stationary mode - Single blink when Y signal is presents and double blinks when Y signal is not connected)
Red LED:	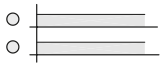	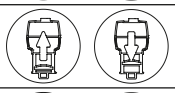	Constantly lit	Stand-By mode
		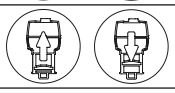	Flashing	Error Mode
Red/ Yellow LED	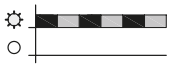		Flashing (1 s cycle)	Set up stroke limitation (retracted stem)
			Flashing (1 s cycle)	Set up stroke limitation (extended stem)
Dark	No indication			No power supply

DIP switch setting

The actuator has a selection of DIP switches (*Fig. 1*) under the service cover.

DIP1: FAST/SLOW – Speed selection
- FAST; 2,7 s/mm
- SLOW; 6 s/mm

DIP2: DIR/INV – Direct or inverse acting selector (*Fig. 2*)**:**
- DIR: The actuator is direct acting to input signal
- INV: The actuator is inverse (*reverse*) acting to control signal

DIP3: 2-10 V / 0-10 V – Input/output
- 2-10 V; the input signal is in the range from 2-10 V (*voltage input*) or from 4-20 mA (*current input*)
- 0-10 V; the input signal is in the range from 0-10 V (*voltage input*) or from 0-20 mA (*current input*)
  Signal range selector sets Y and X signal.

DIP4: LIN/MDF – Characteristic modification function (*Fig. 3*)**:**
- LIN; Linear correlation between Y signal and stem position
- MDF (*Modified*); Enables modified correlation between Y signal and stem position. Degree of modification depends on setting of potentiometer CM.
  The function enables to change **MCV** (***M**otorised **C**ontrol **V**alve*) characteristic (*for example linear to logarithmic and logarithmic to linear*) and works with all combinations of DIP switch settings.

DIP5: 100%/95% – Stroke limitation (*fig.4*)**:**
- Set new maximum retracted position of the actuator
- Set new minimum extended position of the actuator.

DIP6: C/P – Output signal mode selector (*Fig. 5. see next page*) **:**
- An output signal is present on terminal 4 when the position of the actuator is equal to or lower than the S4 set point. An output signal is present on terminal 5 when the position of the actuator is equal to or higher than the S5 set point.
- DIP6 **C** provides a constant output signal on terminals 4 or 5, regardless of the input signal.
- DIP6 **P** provides a pulse signal through parallel or cascade electrical wiring
- Input 1 and 3 dependents from the controller to output terminals 4 or 5.

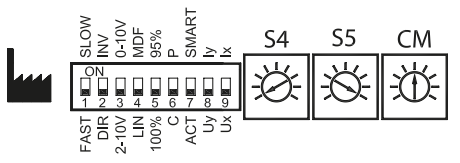

Fig. 1

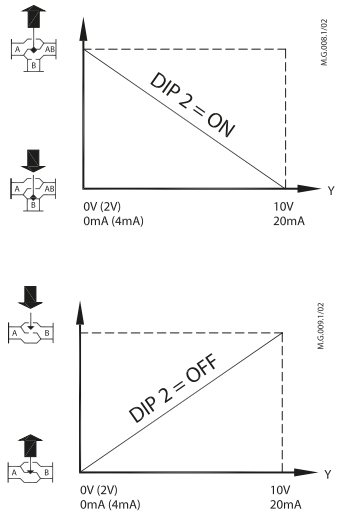

Fig. 2

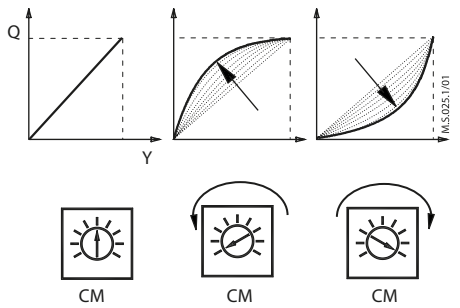

Fig. 3

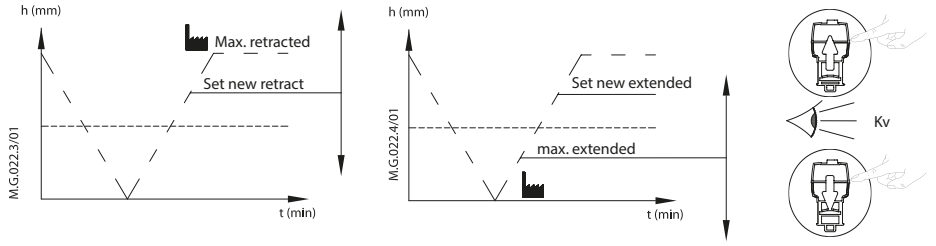

Fig. 4 (For more details see instructions document)

DIP switch setting
(continuous)

DIP7: Smart function selector:
- OFF; the actuator does not try to detect oscillations in the system
- ON; actuator enables special anti-oscillation algorithm – see section on anti-oscillation algorithm

DIP8: Uy/Iy –Input signal type selector:
- Uy; input signal Y is set to voltage (V)
- Iy; input signal Y is set to current (mA)

NOTE:
Y detection is disabled if DIP8 is set to ON positions and DIP3 is set to OFF position.

DIP9: Ux/Ix –Output signal type selector:
- Ux; output signal X is set to voltage (V)
- Ix; output signal X is set to current (mA)

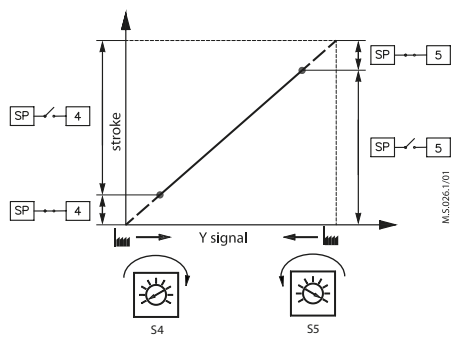

Fig. 5

Anti oscillations algorithm
(SW 7 in position ON)

The actuator has special anti oscillations algorithm. In case control signal Y on certain point oscillates (*Fig. 6*) - looking from time perspective, algorithm starts to lower the amplification of the output to the valve. Instead of having static characteristics actuator changes to dynamic characteristics. After the control signal does not oscillate anymore output to the valve slowly returns back to static characteristics.

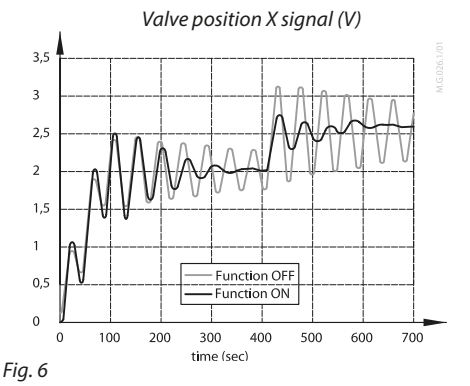

Fig. 6

Oscillation
Harmonic oscillations are high frequency oscillations with low amplitude that vary around its own equilibrium value and not around set-point temperature. They can appear in up to 70 % of control time, even though the system is properly commissioned. Harmonic oscillations have negative influence on control stability, and lifetime of the valve and actuator.

Smoothing function
The smoothing function implemented in the new 2nd generation of anti-oscillation function reduces harmonic oscillations; the actual temperature is closer to the set-point (*desired temperature*). Smoother operation increases lifetime of the valve and actuator. This saves energy and reduces costs in general.

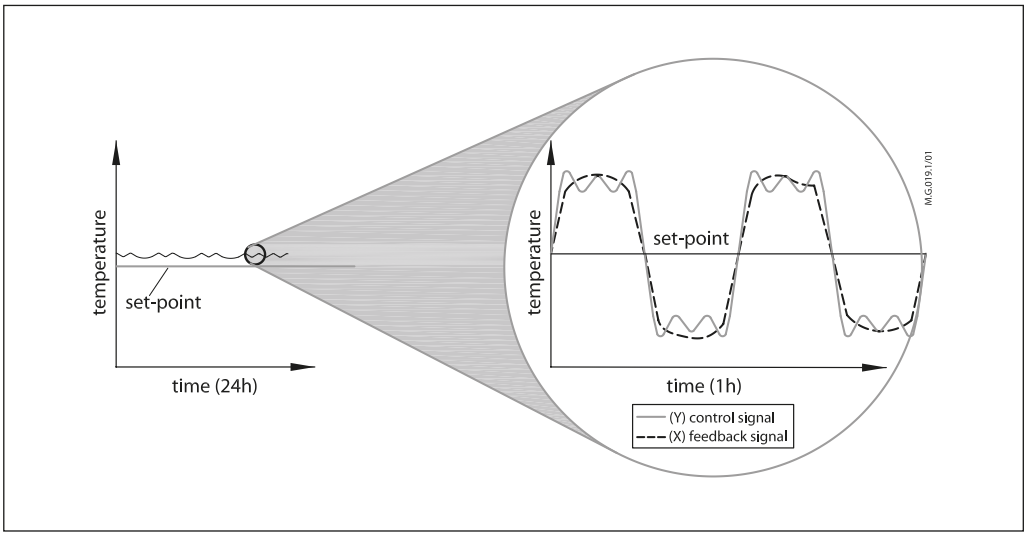

Manual operation

Mechanical and electrical operation are not allowed to be used at the same time!

The actuator can be manually positioned when in Stand-By mode or when there is no power supply (*mechanically*).

Actuator type	Mechanical operation	Electrical operation
AME 685	✓	✓

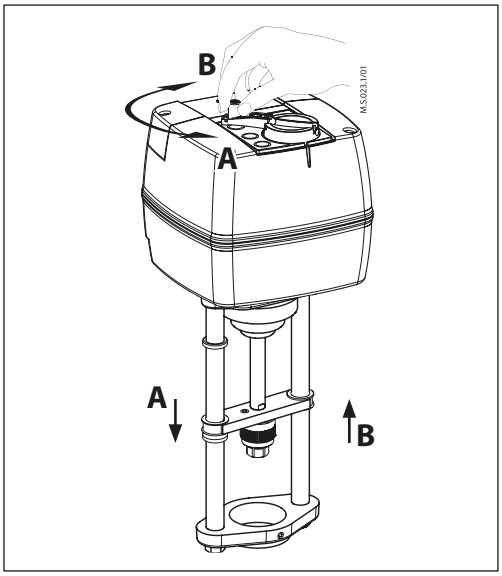

Mechanical manual operation
The actuator has a knob & crank on the top of the housing which enables manual positioning of the actuator.
Use Mechanical manual operation only when the power is disconnected.

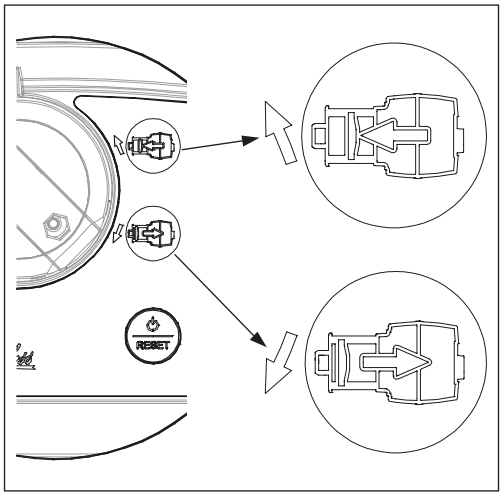

Electrical manual operation
The actuator has two buttons on the top of the housing that are used for electrical manual positioning (*up or down*) if the actuator is in Stand-By mode. First press the RESET button until the actuator goes to Stand-By mode (*red LED is lit*). By pressing the upper button the stem will be extended and by pressing the lower button the stem will be retracted.

Dimensions

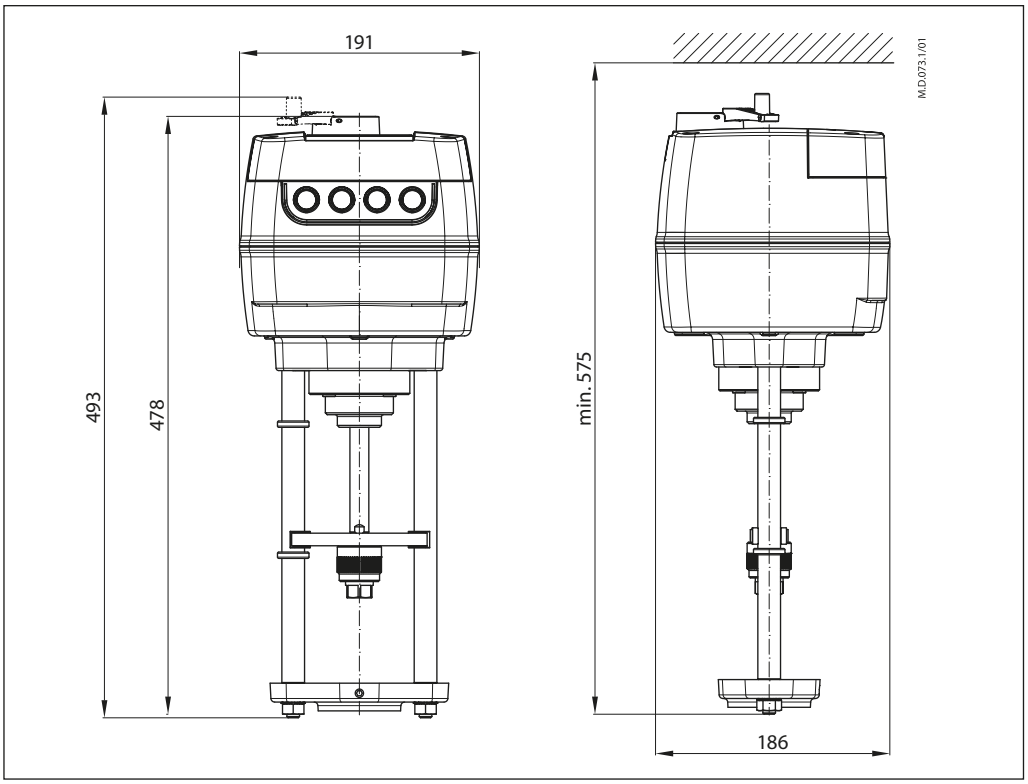

© Danfoss | 2016.04 | 7

Actuator – valves combinations

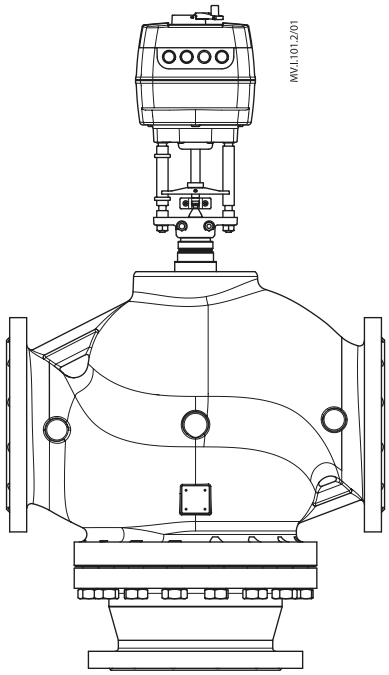

AME 685
VF3 200-300

Danfoss can accept no responsibility for possible errors in catalogues, brochures and other printed material. Danfoss reserves the right to alter its products without notice. This also applies to products already on order provided that such alterations can be made without subsequential changes being necessary in specifications already agreed.
All trademarks in this material are property of the respective companies. Danfoss and the Danfoss logotype are trademarks of Danfoss A/S. All rights reserved.