ENGINEERING
TOMORROW

Data sheet

Standard JIP™ ball valves (PN 16, 25, 40)

Description

Danfoss Standard JIP™ ball valves is a range of reduced bore shut off valves developed for District Heating and District Cooling networks, with circulating medium.

It is a range of steel ball valves with fully welded body.

The valve design makes them ideal for building installation due to:

- Energy saving: with optimum flow design valves have highest kv on the market and consequently lowest pump energy costs.
- Long lifetime and optimal tightness due to design and material selection in ball seal and stem seal (carbon reinforced PTFE) ;
- The valves are maintenance free, besides the shut off valves in the core distribution network Danfoss offers a range of supplementary valves, e.g. hot tap valves, branching valves, twin valves and draining valves.

Main data:

- DN 15-600
- k_{vs} = 8-26.300 m^3/h
- PN 16 / 25 / 40
- Leakage rate A (according to EN12266-1) - both directions
- Temperature: 0 ... 180 °C
- Medium: Circulation water / glycolic water up to 50 %
- Min. storage and transport temperature: –40 °C

Approvals and norms:

- 100 % final inspection. Leak and shell test as well as dimension and functionality test is performed on each and every valve according to applicable standard (EN 12266 part 1 P10-P11-P12 & part 2 F20).
- PED Directive 2014/68/EU Modul H1
- Danfoss A/S is certified according to ISO 9001
- Furthermore certified according to ISO 14001 and ISO45001.

Ordering

JIP-WW welding
JIP-FF flange

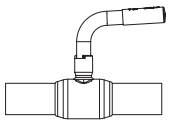

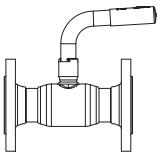

JIP-WW welding			JIP-FF flange			
Code No.						
DN (mm)	WW PN 25	WW PN 40	DN (mm)	FF PN 16	FF PN 25	FF PN 40
15	-	065N1100	15	-	-	065N1101
20		065N0105	20			065N0305
25		065N0110	25			065N0310
32		065N0115	32			065N0315
40		065N0120	40			065N0320
50		065N0125	50			065N0325
65	065N4280	-	65	065N4282	065N4281	-
80	065N4285		80	065N4287	065N4286	
100	065N0140		100	065N0240	065N0340	
125	065N0745		125	065N0845	065N0945	
150	065N0750		150	065N0850	065N0950	
200	065N0755		200	065N0855	065N0955	

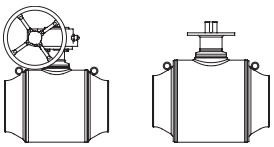

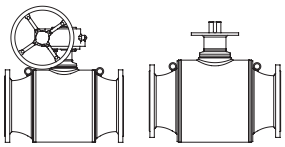

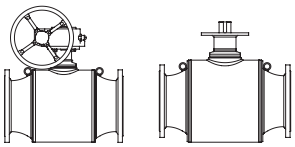

JIP-WW welding			JIP-FF flange			
DN (mm)	Code No. WW PN 25		Code No. FF PN 16		Code No. FF PN 25	
	Valve with worm gear	Valve with gear flange	Valve with worm gear	Valve with gear flange	Valve with worm gear	Valve with gear flange
65	065N0134	065N0132	065N0223	065N0232	065N0331	065N0332
80	065N0139	065N0137	065N0236	065N0237	065N0336	065N0337
100	065N0144	065N0142	065N0243	065N0242	065N0341	065N0342
125	065N0146	065N0147	065N0246	065N0247	065N0346	065N0347
150	065N0151	065N0152	065N0251	065N0252	065N0351	065N0352
200	065N0156	065N0157	065N0275	065N0257	065N0356	065N0357
250	065N0161	065N0162	065N0216	065N0262	065N0361	065N0362
300	065N0166	065N0167	065N0266	065N0267	065N0366	065N0367
350	065N0171	065N0172	065N0271	065N0272	065N0371	065N0372
400	065N0176	065N0177	065N0276	065N0277	065N0376	065N0377
450	065N0178	065N0179	065N0278	065N0279	065N0378	065N0379
500	065N0181	065N0182	065N0281	065N0282	065N0381	065N0382
600	065N0186	065N0187	-			

JIP-II internal thread
JIP-IW internal thread/welding

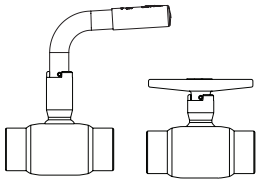

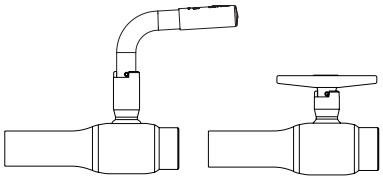

JIP-II internal thread			JIP-IW internal thread / welding		
DN (mm)	Code No. II PN 40		DN (mm)	Code No. IW PN 40	
	L-handle high stem	T-handle low stem		L-handle high stem	T-handle low stem
15	065N0800	065N0802	15	065N0900	065N0904
20	065N0805	065N0807	20	065N0905	065N0908
25	065N0810	065N0812	25	065N0910	065N0914
32	065N0815	-	32	065N0915	-
40	065N0820		40	065N0920	
50	065N0825		50	065N0925	

© Danfoss | 2021.08

Ordering

JIP-FW flange/welding

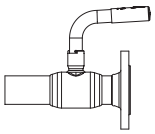

DN (mm)	JIP-FW flange / welding		
	Code No.		
	PN 16	PN 25	PN 40
15	-		065N1102
20			065N0705
25			065N0710
32			065N0715
40			065N0720
50			065N0725
65	065N4284	065N4283	-
80	065N4289	065N4288	
100	065N0540	065N0640	
125	065N0960	065N0975	
150	065N0965	065N0980	
200	065N0970	065N0985	

Copper valves
JIP-CC copper
JIP-IC internal thread /copper
Max temp. 130°

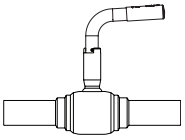

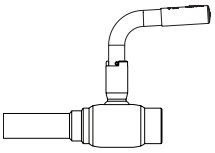

DN (mm)	JIP-CC copper	JIP-IC internal thread / copper
	Code No.	
	CC PN 16	IC PN 16
15	065N4058	065N4057
20	065N4067	065N4064
25	065N4095	065N4087

Copper twin valves for single pipe connection
JIP-IC internal thread / copper
Max temp. 130°

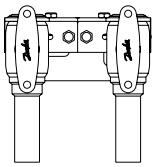

DN (mm)	JIP-IC internal thread / copper
	Code No.
	IC PN 16 with T-handle
15	065N4195
20	065N4071

Twin valves for single pipe connection
T-handle (DN 15-25) or
L-handle (DN 32)
JIP- WW welding
JIP-II internal thread
JIP IW internal thread / welding

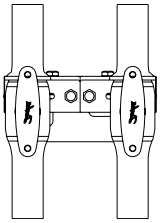

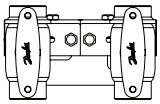

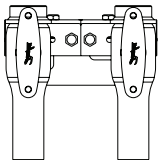

DN (mm)	JIP-WW welding	JIP-II internal thread	JIP-IW internal thread / welding
	Code No.		
	WW PN 40	II PN 40	IW PN 40
15	065N4001	065N0801	065N0901
20	065N4002	065N0806	065N0906
25	065N4003	065N0811	065N0911
32	065N4004	065N0816	065N0916

Ordering

Twin valves for double pipe connection
T-handle
JIP-IW internal tread / welding
JIP-II internal thread

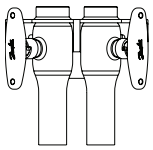

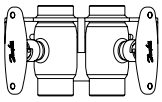

	JIP-IW internal thread / welding	JIP-II internal thread
DN (mm)	**Code No.**	
	IW PN 40	**II PN 40**
15	**065N7032**	**065N7022**
20	**065N7034**	**065N7024**
25	**065N7036**	**065N7026**

Draining valves
JIP-WE cc welding/external thread with closing cap

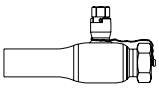

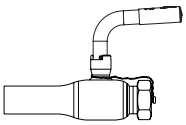

	JIP-WE cc welding / external thread with closing cap	
DN (mm)	**Code No.**	
	WE PN 40-hex vers.	**WE PN 40-L-handle**
15	**065N4322**	**065N4422**
20	**065N4323**	**065N4423**
25	**065N4324**	**065N4424**
32	**065N4325**	-
40	**065N4326**	
50	**065N4327**	

Actuators

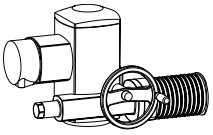

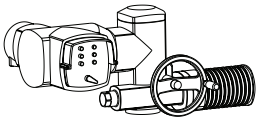

DN (mm)	**Code No.**	
	Auma NORM[1)]	**Auma MATIC[1)]**
65	**065N8397**	**065N8398**
80	**065N8199**	**065N8399**
100	**065N8200**	**065N8400**
125-200	**065N8205**	**065N8405**
250	**065N8220**	**065N8420**
300-350	**065N8225**	**065N8425**
400	**065N8235**	**065N8435**
450-600	**065N8240**	**065N8440**

[1)] More information on page 15. For additional information related to the electric actuator ordering, please contact local Danfoss representative.

Worm gear

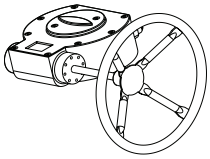

Description	Worm gear	Position indicator with end switch
Worm gear for DN 65 reduced bore	**065N0683**	**065N0694**
Worm gear for DN 80-100 reduced bore	**065N0684**	**065N0695**
Worm gear for DN 125-200 reduced bore	**065N0685**	**065N0695**
Worm gear for DN 250 reduced bore	**065N0691**	**065N0696**
Worm gear for DN 300-350 reduced bore	**065N0687**	**065N0697**
Worm gear for DN 400 reduced bore	**065N0688**	**065N0698**
Worm gear for DN 450-600 reduced bore	**065N0689**	**065N0699**
Position indicator: Temperature -15 ... 80°C, IP65 Worm gear: Temperature -20 ... 120°C, IP68		

© Danfoss | 2021.08

Ordering
Accessories

Replacement handles		
Type of handle	**Fixation**	**Code No.**
T Alu. DN 15-25	spring pin	**065N8255**
L Steel DN 15-32 with plastic grip	spring pin	**065N8256**
L Steel DN 40-50 with plastic grip	spring pin	**065N8257**
L Steel DN 65 with plastic grip	spring pin	**065N8258**
L Steel DN 80 with plastic grip	spring pin	**065N8259**
L Steel DN 100 with plastic grip	spring pin	**065N8262**
L Steel DN 125 with plastic grip	spring pin	**065N8260**
L Steel DN 150 with plastic grip	spring pin	**065N8261**
L Steel angled DN 200 with plastic grip	screw	**065N8001**

Handles with extended shaft for pipes with thick insulation						
Type of handle	**Code No.**	**Valve DN**	**H**	**h**	**S**	**Picture**
Handle DN15-32 RB L115-H	**065N8350**	15	142	196	115	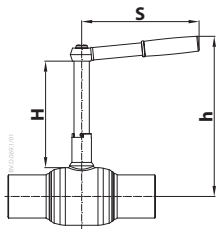
		20	142	196	115	
		25	142 (157)[1]	199 (214)[1]	115	
		32	141 (155)[1]	204 (218)[1]	115	
Handle DN 40-50 RB L157-H	**065N8351**	40	170 (201)[1]	248 (279)[1]	157	
		50	174 (200)[1]	252 (284)[1]	157	
Handle DN 65 RB L205-H	**065N8352**	65	188	283	205	
Handle DN 80-100 RB L405-H	**065N8353**	80	210	334	405	
		100	227	367	405	
Handle DN 125 RB L505-H	**065N8354**	125	225	412	505	
Handle DN 150 RB L645-H	**065N8355**	150	231	451	645	
Handle DN200RB L645-HexT-H	**065N8356**	200	245	492	645	

[1] *Valid for flanged version (FF)*

Marking knobs for handles DN15-100 (red/blue)	Code No.
Red knobs (bag with 100 pieces)	**065N8303**
Blue knobs (bag with 100 pieces)	**065N8304**

Technical data

DN [mm]	15	20	25	32	40	50	65	80	100	125	150	200	250	300	350	400	450	500	600
K_{VS} [m³/h]	8/11*	15	34	52	96	184	200	470	640	1,080	1,900	2,300	5,100	9,100	7,000	10,400	26,300	23,700	14,300
PN	16/25/40						16/25												
Temp range	0-180 °C																		
Medium	Circulation water / glycolic water up to 50 %																		

K_{VS} for the codes 065N1100, 065N1101 and 065N1102 is 8 [m3/h], K_{VS} for all other DN 15 codes is 11 [m3/h]

Design & Material

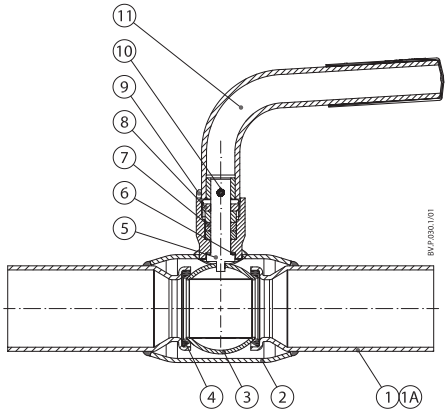

DN 15-50 with handle

1	Welding end	*Weldable mild steel 20#
1A	Flange	*Weldable mild steel 20#
2	Shell	*Weldable mild steel 20#
3	Ball	Stainless steel
4	Ball seal	Carbon reinforced PTFE
5	Stem	Stainless steel
6	Washer	Carbon reinforced PTFE
7	Stem sealing rings	Carbon reinforced PTFE
8	Compression nut	Steel
9	Packing box	*Weldable mild steel 20#
10	Pin	Spring steel
11	Handle	Steel

Design & Material

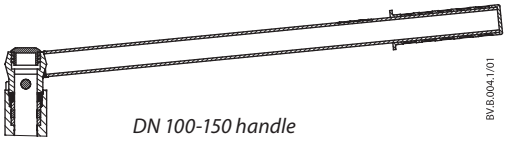

DN 100-150 handle

1	Welding end	*Weldable mild steel 20#
1A	Flange	*Weldable mild steel 20#
2	Shell	*Weldable mild steel 20#
3	Ball seal retainer	*Weldable mild steel 20#
4	Ball	Stainless steel
5	Pipe insert	Stainless steel
6	Support ring	Stainless steel
7	Disc spring	Domex 650 MC
8	Ball seal	Carbon reinforced PTFE
9	Stem	Stainless steel
10	Washer	Carbon reinforced PTFE
11	Stem sealing rings	Carbon reinforced PTFE
12	Compression ring	Steel
13	Compression nut	Steel
14	Packing box	*Weldable mild steel 20#
15	Pin	Spring steel
16	Handle	Steel

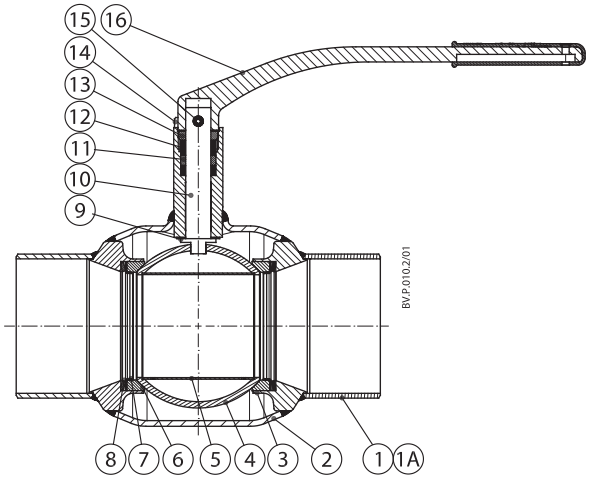

DN 65-80 with handle

1	Welding end	*Weldable mild steel 20#
1A	Flange	*Weldable mild steel 20#
2	Guiding pipe	*Weldable mild steel 20#
3	Shell	*Weldable mild steel 20#
4	Ball seal retainer	*Weldable mild steel 20#
5	Ball	Stainless steel
6	Pipe insert	Stainless steel
7	Ball seal	Carbon reinforced PTFE
8	Disc spring	Domex 650 MC
9	Stem	Stainless steel
10	Washer	Carbon reinforced PTFE
11	Packing box	*Weldable mild steel 20#
12	Steam sealing rings	Carbon reinforced PTFE
13	Compression ring	Steel
14	Compression nut	Steel
15	Stopsector	Stainless steel
16	Handle	Steel

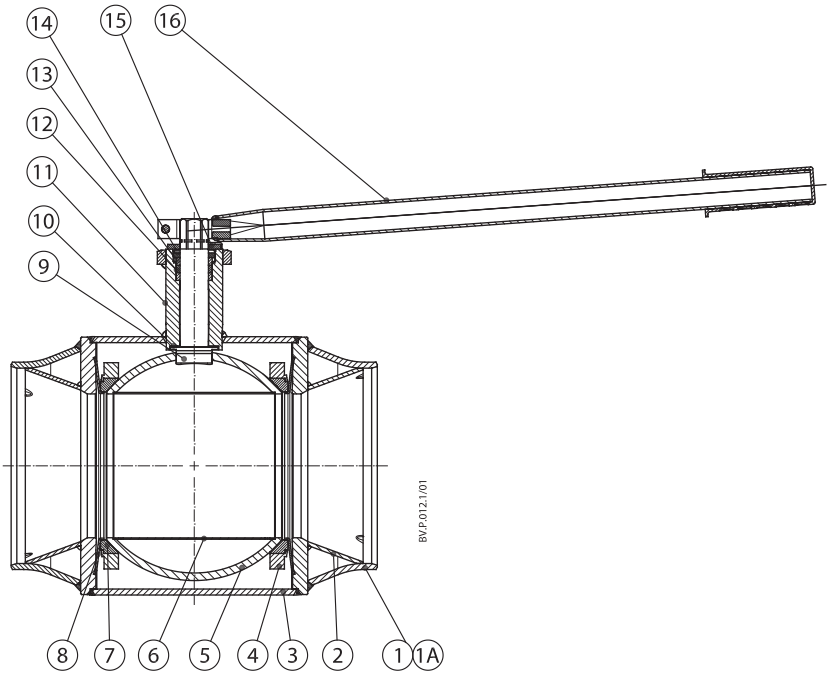

DN 200 with handle

© Danfoss | 2021.08

Design & Material

1	Welding end	*Weldable mild steel 20#
1A	Flange	*Weldable mild steel 20#
2	Guiding pipe	*Weldable mild steel 20#
3	Shell	*Weldable mild steel 20#
4	Ball seal retainer	*Weldable mild steel 20#
5	Ball	Stainless steel
6	Guide pipe	Stainless steel
7	Ball seal	Carbon reinforced PTFE
8	Disc spring	Domex 650 MC
9	Stem	Stainless steel
10	Washer	Carbon reinforced PTFE
11	Packing box	*Weldable mild steel 20#
12	Stem sealing rings	Carbon reinforced PTFE
13	Compression ring	Steel
14	Compression nut	Steel
15	Simmerring	Rubber
16	Key	Steel

** According to the GB/T8163. Or equivalent mild steel in accordance with CE-PED*

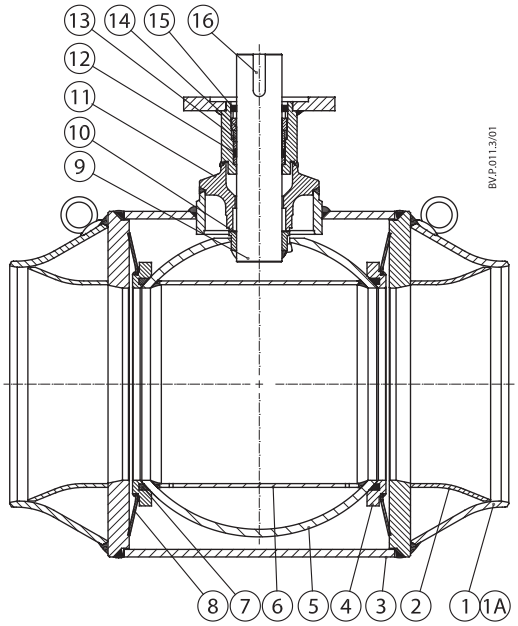

DN 65-600 with gear flange

Technical data

Pressure drop/velocity

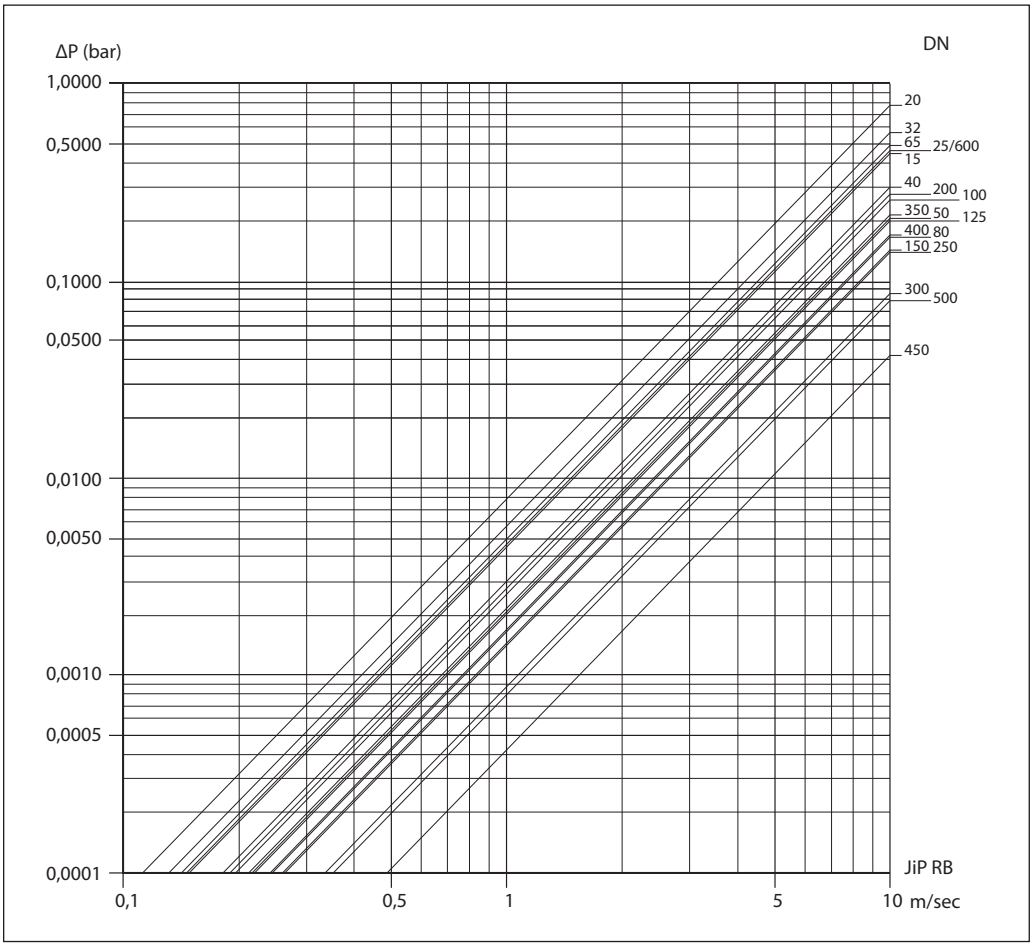

Technical data
Pressure drop/flow

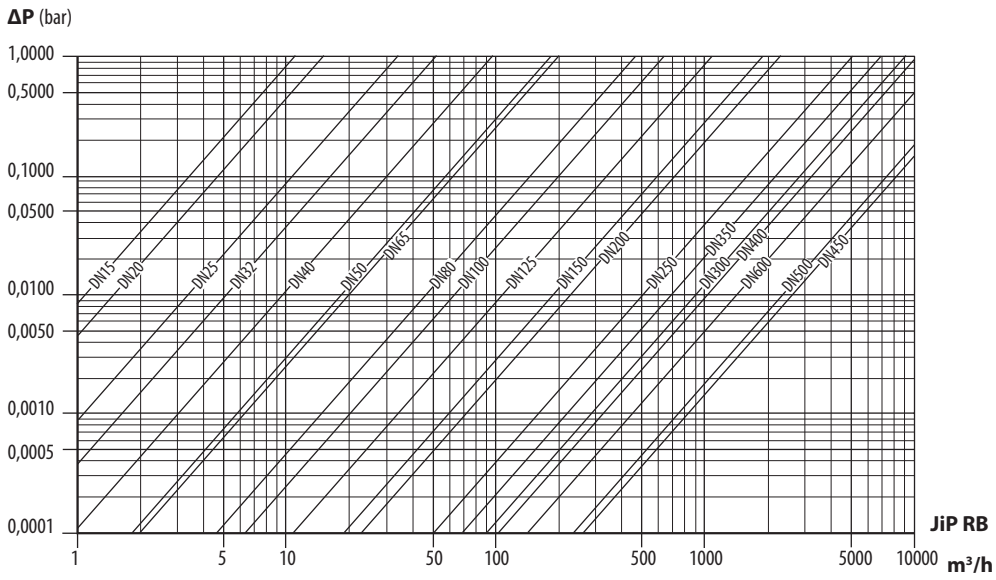

Pressure/temperature
JIP-WW

DN 15-50

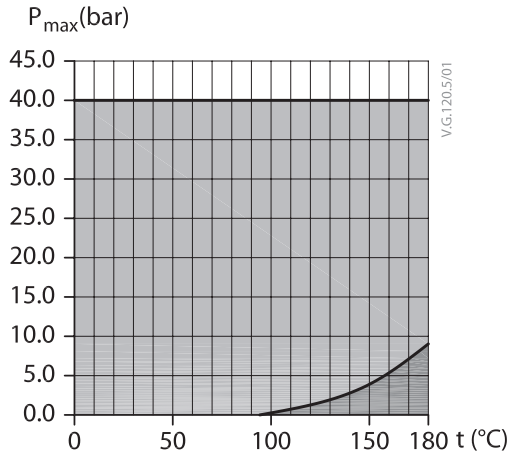

DN 65-600

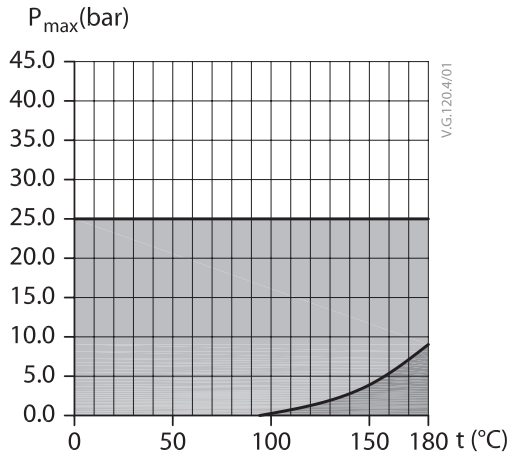

Legend:

- *Normal operating area (water)*
- *Steam area*

© Danfoss | 2021.08

Pressure/temperature
JIP-FF

PN 16, DN 65-600

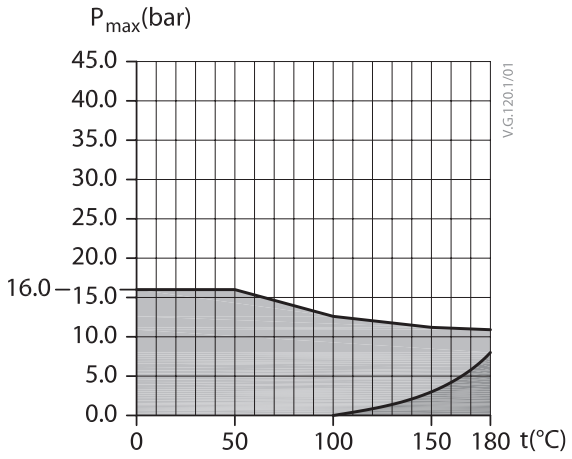

PN 25, DN 65-600

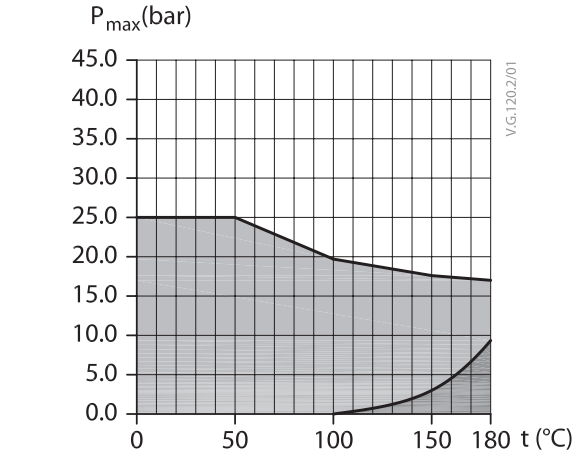

PN 40, DN 15-50

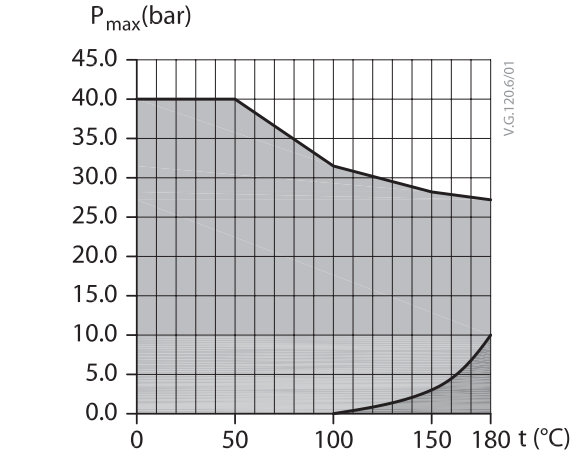

Legend:

- *Normal operating area (water)*
- *Steam area*

Dimensions

JIP-WW welding/ welding

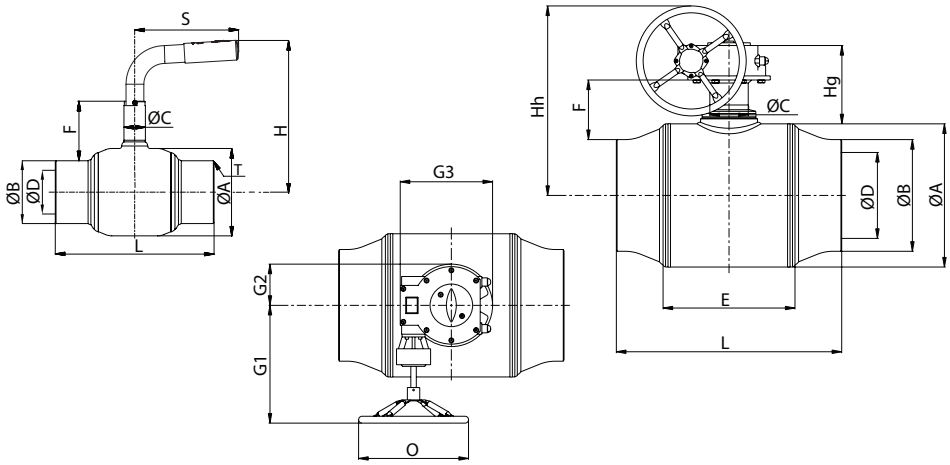

DN (mm)	ØA	T	ØB	ØD	L	H	Hh	Hg	E	F	ØC	S	O	G1	G2	G3	Weight (kg)
PN 40																	
15	34		21.3	13	230	125				61	25	115					1.0
20	42.4		26.9	15	230	125				58	25	115					1.0
25	48.3	2.6	33.7	20	230	130		-		56	25	115		-			1.2
32	60.3		42.4	25	260	135				56	25	115					1.5
40	76.1		48.3	32	260	170				54	35	157					2.3
50	76.1	2.9	60.3	40	300	175				54	35	157					2.8
PN 25																	
65	102	2.9	76.1	50	260	160	265	105	97	73	35	205	200	113	40	100	6
80	127	3.2	88.9	65	270	190	306	116	110	88	39	260	250	129	54	131	11
100	159	3.6	114.3	80	290	232	321	122	145	108	39	405	250	129	54	131	16
125	194	4	139.7	100	315	250	356	125	165	109	44	505	250	129	58	132	22
150	219	4.5	168.3	125	340	310	378	135	205	109	49	505	250	129	58	132	30.3
200	273	6.3	219.1	150	390	315	401	131	245	118	60	650	250	129	58	132	45
250	356	6.3	273.0	200	530		613	224	340	181	88		450	169	78	192	110
300	457	8	323.9	250	660		661	237	400	199	100		450	242	107	255	221
350	457	8	355.6	250	760		661	237	400	183	100		450	242	107	255	229
400	521	8.8	406.4	300	820	-	714	281	480	217	140	-	450	285	143	323	304
450	711	10	457	400	1225		829	317	690	297	168		500	324	147	337	724
500	711	11	508	400	1220		829	317	690	272	168		500	324	147	337	739
600	711	12.5	610	400	1500		829	317	695	221	168		500	324	147	337	832

Weights are based on PN 40/25 versions. DN 250 - DN 600: Dimensions and weights are PN 25 and including worm gear.

JIP-II internal thread

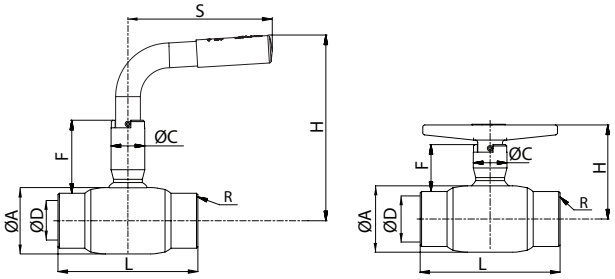

DN (mm)	ØA	R	ØD	L	H low	F low	H high	F high	ØC	S	Weight (kg)
15	42.4	½″	15	90	65	35	125	55	25	115	0.6
20	42.4	¾″	15	90	65	35	125	55	25	115	0.8
25	48.3	1″	20	100	70	35	130	55	25	115	0.9
32	60.3	1 ¼″	25	105			135	55	25	115	1.2
40	76.1	1 ½″	32	130	-		170	80	35	157	2.2
50	88.9	2″	40	150			175	80	35	157	3.3

© Danfoss | 2021.08

Dimensions

JIP-FF flange/flange

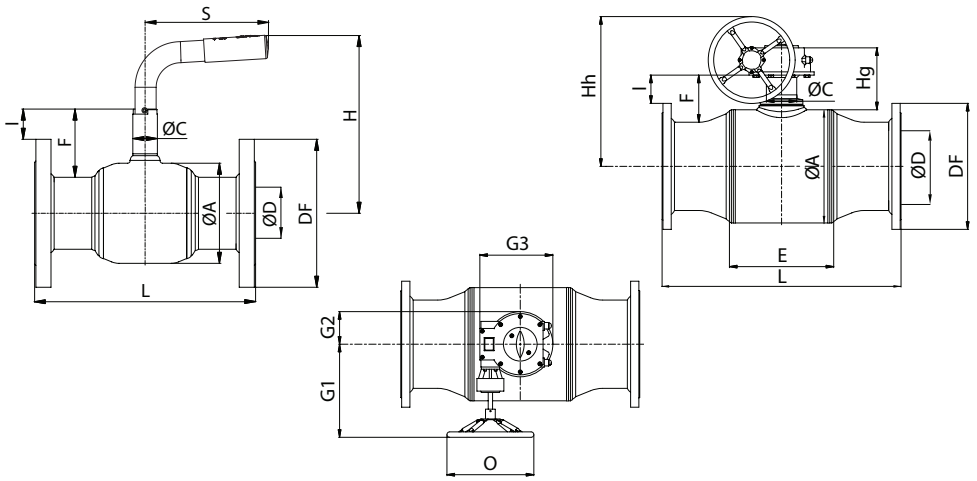

DN (mm)	ØA	ØD*	L	DF	I	L	DF	I	H	Hh	Hg	E	F	ØC	S	O	G1	G2	G3	Weight (kg)
			PN 16			PN 40														
15	34	13				130	95	23	125				58	25	115					2.2
20	42.4	15				150	105	19	125				58	25	115					2.9
25	48.3	20				160	115	15	130				57	25	115					3.5
32	60.3	25		-		180	140	10	135		-		59	25	115		-			4.8
40	76.1	32				200	150	35	170				86	35	157					6.5
50	76.1	40				230	165	35	175				86	35	157					8.7
-			PN 16			PN 25			-											
65	102	50	270	185	18	290	185	18	160	265	130	100	73	35	205	200	113	40	100	12
80	127	65	280	200	33	310	200	33	190	306	117	110	88	39	260	250	129	54	131	18
100	159	80	300	220	56	350	235	48	225	321	125	135	108	39	405	250	129	54	131	26
125	194	100	325	250	54	400	270	44	215	356	144	165	109	44	505	250	129	58	132	32
150	219	125	350	285	51	480	300	43	235	378	155	205	109	49	505	250	129	58	132	45
200	273	150	400	340	66	600	360	56	315	401	149	245	126	60	650	250	129	58	132	74
250	356	200	650	405	115	730	425	105		613	228	340	181	88		450	169	78	192	165
300	457	250	750	460	131	850	485	119		661	254	400	199	100		450	242	107	255	262
350	457	250	850	520	101	980	555	84		661	254	400	183	100		450	242	107	255	289
400	521	300	1100	580	130	1100	620	110	-	714	285	480	220	140	-	450	285	143	323	400
450	711	400	1255	640	206	1255	670	191		829	322	690	297	168		500	324	147	337	819
500	711	400	1250	715	169	1250	730	161		829	322	690	272	168		500	324	147	337	866

Weights are based on PN 40/25 versions. DN 250 - DN 600: Dimensions and weights are PN 25 and including worm gear.
ØD - internal nominal diameter*

JIP-IW internal head/welding

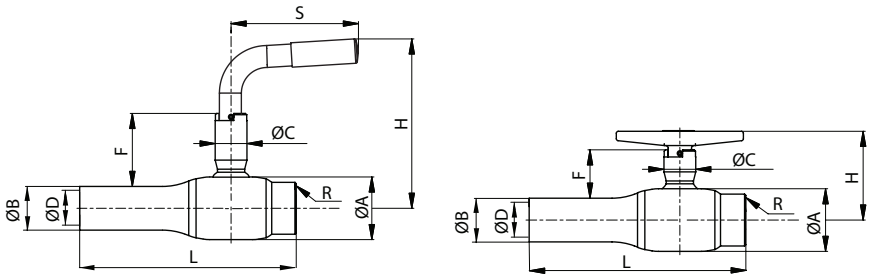

DN (mm)	ØA	ØB	R	ØD*	L	H low T	F low	H high L	F high	ØC	S	Weight (kg)
15	42.4	21.3	½″	15	160	65	40	125	60	25	115	0.9
20	42.4	26.9	¾″	15	160	65	37	125	60	25	115	0.9
25	48.3	33.7	1″	20	165	70	37	130	55	25	115	1.0
32	60.3	42.4	1 ¼″	25	185			135	58	25	115	1.4
40	76.1	48.3	1 ½″	32	195	-		170	86	35	157	2.3
50	88.9	60.3	2″	40	225			175	86	35	157	3.3

ØD - internal nominal diameter*

Dimensions

JIP-FW flange/welding

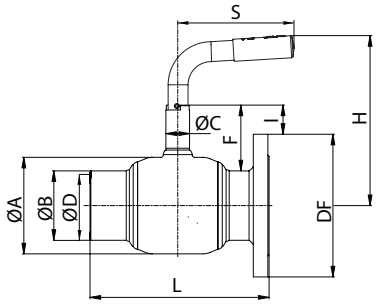

DN (mm)	ØA	ØB	ØD*	L	DF	I	L	DF	I	H	F	C	S	Weight (kg)
				PN 16			PN 40							
15	34	21.3	13	-			180	95	23	125	58	25	115	1.7
20	42.4	26.9	15				190	105	19	125	58	25	115	2.0
25	48.3	33.7	20				195	115	15	130	57	25	115	2.4
32	60.3	42.4	25				220	140	10	135	59	25	115	3.4
40	76.1	48.3	32				230	150	35	170	86	35	157	4.3
50	88.9	60.3	40				265	165	35	175	86	35	157	5.9
-				PN 16			PN 25			-				
65	102	76.1	50	265	185	18	265	185	18	160	73	35	205	7
80	127	88.9	65	275	200	33	275	200	33	190	88	39	260	9
100	159	114.3	80	295	220	56	295	235	48	225	108	39	405	15
125	194	139.7	100	320	250	54	320	270	44	250	109	44	505	23
150	219	168.3	125	345	285	51	345	300	43	285	109	49	505	35
200	273	219.1	150	395	340	66	395	360	56	315	126	60	650	65

Weights are based on PN 40/25 versions. DN 250 - DN 600: Dimensions and weights are PN 25 and including worm gear.
ØD - internal nominal diameter*

Valve top and gear flange

DN (mm)	Gear flange	l	Ød	n	p	q	r
		mm					
65	F07	31	16	27	5	13	4
80		45	20	41	6	165	
100		43		39			
125	F10/F12	50	30	46	8	26	
150							
200							
250	F16	60	50	48	14	44.5	5
300		65	60	51	18	53.2	6
350							
400	F25	75	75	60	20	60	
450		115	100	91	28	80	
500							
600							

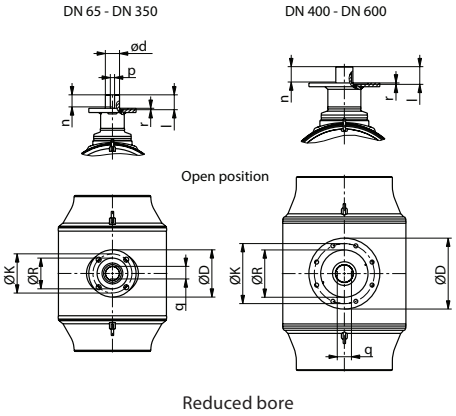

Gear flange	No. of bolt holes	Diameter of bolt holes	ØD	ØK	ØR
			mm		
F7	4	9	88	70	55
F10		11	125	102	70
F12		13	150	125	85
F16		21	210	165	130
F25	8	17	300	254	200
F30		21	350	298	230

© Danfoss | 2021.08

Dimensions
House insertions
Single valve
JIP-CC copper
JIP-IC internal thread / copper
Max temp. 130°

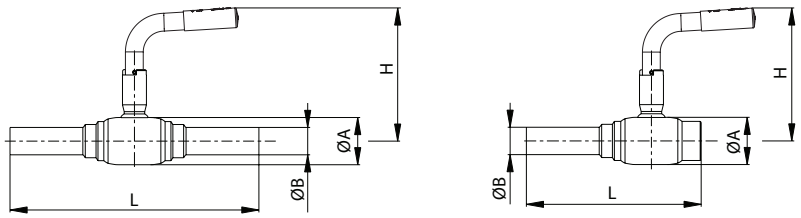

DN (mm)	ØA	ØB	L CC	L IC	H	Weight (kg)
PN 16						
15	42.4	18/21.3/18	245	168	125	0.93
20	42.4	22	255	175	125/125/105	0.93
25	48.3	28	255	180	130	1.10

ØD - internal nominal diameter*

House insertions
Twin valve - single pipe
JIP-IC internal thread/copper
Max temp. 130°

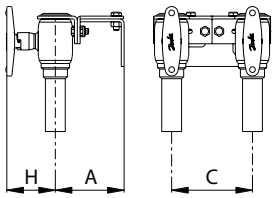

DN (mm)	A	C	H	Weight (kg)
PN 16				
15	100-145	115-200	65	2.83
20	100-145	115-200	65	2.75

House insertions
Twin valves - single pipe
JIP-WW welding
JIP -II internal thread
JIP IW internal thread/welding

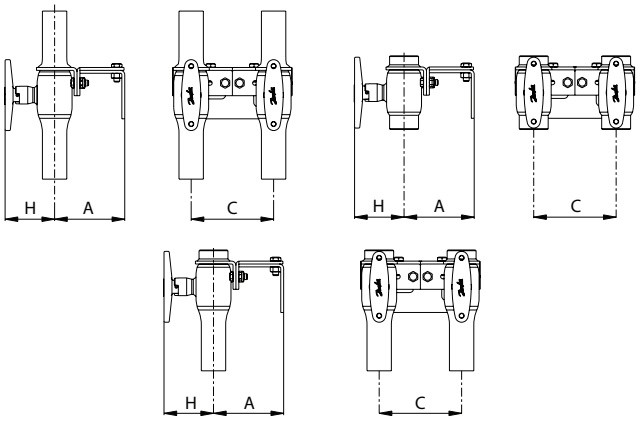

DN (mm)	A	C	H	Weight (kg)
PN 40				
15	100-145	115-200	65	2.2
20	100-145	115-200	65	2.2
25	100-145	115-200	70	2.3
32	115-160	115-200	115	3.5

Dimensions
House insertions
Twin valves - double pipe
JIP-II/JIP-IW internal thread

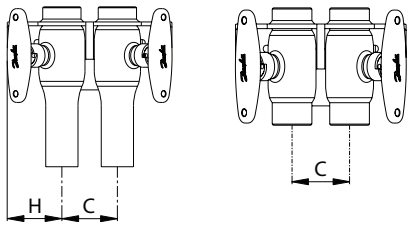

DN (mm)	C	H	Weight (kg)
PN 40			
15	58	55	2.2
20	58	55	2.3
25	58	60	2.3

JIP-WE cc welding / external thread with closing cap

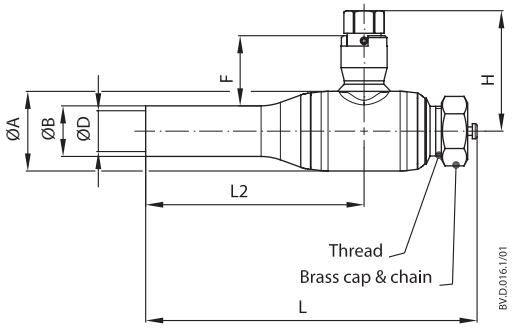

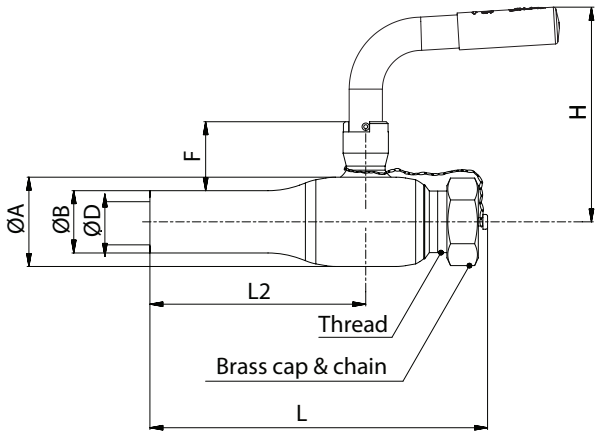

DN (mm)	ØA	ØB	ØD*	F	L	L2	H	H L-handle	Thread	Hex.	Weight (kg)
PN 40											
15	42.4	21.3	15	40	175	115	65	105	¾″	19	1.0
20	42.4	26.9	15	37	175	115	65	105	¾″	19	1.0
25	48.3	33.7	20	37	185	115	67	105	1″	19	1.5
32	60.3	42.4	25	38	195	130	75	-	1 ¼″	19	2.0
40	76.1	48.3	32	55	210	130	100		1 ½″	27	3.7
50	88.9	60.3	40	54	240	150	105		2″	27	4.4

ØD - internal nominal diameter*

 © Danfoss | 2021.08

AUMA NORM electrical actuators for Danfoss ball valves

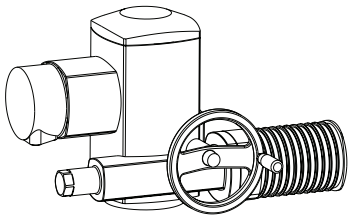

Danfoss ball valves	Auma Actuators	
DN (mm)	**Type**	**Operating time for 90° turn** (s)
65-80	SQ 05.2	16
100	SQ 07.2	32
125-150-200	SQ 10.2	32
250	SA 07.6+GS 100.3+VZ 4.3	142
300-350	SA 07.6+GS 125.3+VZ 4.3	142
400	SA 10.2+GS 125.3+VZ 4.3	142
450-500-600	SA 10.2+GS 160.3+GZ 160.3	207

The actuators can be equipped with various accessories.
Control and regulating unit AUMA Matic in the basis design can be supplied.
For other mains voltages than 3 × 400V/50Hz or additional questions please contact us.

When commissioning and under certain problematic system conditions, it can be necessary to choose slower actuators to avoid water hammering and oscillations.

For additional information related to the electric actuator ordering, please contact local Danfoss representative.

Features:
- 2 limit switches - opening/closing
- 2 torque switches - opening/closing
- Heater
- Blinker switch for operating phase
- Manual operation with hand wheel
- Thermo switch

Main Data:
- Nominal voltage: 3 × 400 VAC, 50Hz
- Grade of enclosure: IP 68
- Wiring diagram: TPA 00R1AA-000

Danfoss A/S
Climate Solutions • danfoss.com • +45 7488 2222

Any information, including, but not limited to information on selection of product, its application or use, product design, weight, dimensions, capacity or any other technical data in product manuals, catalogues descriptions, advertisements, etc. and whether made available in writing, orally, electronically, online or via download, shall be considered informative, and is only binding if and to the extent, explicit reference is made in a quotation or order confirmation. Danfoss cannot accept any responsibility for possible errors in catalogues, brochures, videos and other material.
Danfoss reserves the right to alter its products without notice. This also applies to products ordered but not delivered provided that such alterations can be made without changes to form, fit or function of the product.
All trademarks in this material are property of Danfoss A/S or Danfoss group companies. Danfoss and the Danfoss logo are trademarks of Danfoss A/S. All rights reserved.