ENGINEERING
TOMORROW

Data sheet

ChangeOver⁶ and NovoCon ChangeOver⁶ - Motorized 6-port Ball Valves

Description

ChangeOver⁶ & NovoCon ChangeOver⁶

The ChangeOver⁶ and NovoCon ChangeOver⁶ are 6-port motorized ball valves that performs a diverting function between two water circuits in 4-pipe changeover system.

This diverting function allows the cooling and heating capacity of a fan coil unit to be increased for the same compact size compared to a double coil model where the heating and cooling water circuits each have their own coil.

The ChangeOver⁶ and NovoCon ChangeOver⁶ are 6-port motorized ball valves and not suitable for flow control. Flow is modulated by the AB-QM pressure independent balancing control valve to avoid overflow and reduced efficiency of boiler or chiller.

Typical applications are:
- Radiant ceiling panel, supplied by 4 pipes (Heating supply and return and cooling supply and return)
- Fan coil unit, with single coil supplied by 4 pipes (Heating supply and return and cooling supply and return)

Features (ChangeOver⁶):
- No cross-flow between supply circuits
- Single on/off control signal to changeover supply circuits
- Visual indication of actual valve position
- Silent and reliable operation
- Maintenance free
- Teflon seal and polished chrome valve ball to prevent valve sticking
- Manual override

NovoCon ChangeOver⁶:

The Actuator NovoCon ChangeOver⁶ is a unique 6-port motorised ball valve solution, which is controlled directly from NovoCon® S and performs a diverting function between two water circuits in 4-pipe ChangeOver⁶ system.

The NovoCon® S bus actuator controls the flow and the 6-port diverting valve with actuator, switches between heating and cooling, characterized by that:

- There is only one single plug-in cable, with bus connection and power supply to the NovoCon® S actuator. One plug-in cable between the 6-port Actuator NovoCon® S ChangeOver⁶ and the NovoCon® S actuator , which includes a 0-10V control signal, feedback signal and power connection.
- The NovoCon® S PIBCV actuator detects by means of comparing 0-10V control & feedback signal if 6-port actuator is in manual operation or if the valve is blocked (feedback signal does not follow control signal).
- 6-port actuator is in maintenance mode able to fully close the valve to prevent any leakage.

Features (NovoCon ChangeOver⁶):
- No cross-flow between supply circuits
- Simple connection and control
- Visual indication of actual valve position
- Silent and reliable operation
- Alarm
- Plug-in cable
- Quick-fit to actuator
- Maintenance free
- Teflon seal and polished chrome valve ball to prevent valve sticking
- Manual override

Ordering

Type	Cable length (m)	Power supply	Connection	Code No.
Actuator ChangeOver⁶	1.5	24V AC	Open end	**003Z3152**
	5.0	24V AC	Open end	**003Z3153**
	1.5	230V AC	Open end	**003Z3154**
Actuator NovoCon ChangeOver⁶	1	24V AC/DC	Plug-in	**003Z8520**
Actuator NovoCon ChangeOver⁶ Energy	1 / Surface temperature sensors 1.5	24V AC/DC	Plug-in	**003Z8521**
Actuator NovoCon ChangeOver⁶ Flexible	1.5	24V AC/DC	Open end	**003Z8522**

Type	DN	k_{vs} (m^3/h)	Connection	Code No.
ChangeOver⁶ valve	15	2.4	Rp ½	**003Z3150**
	20	4.0	Rp ¾	**003Z3151**

Type	DN	Fire load class[1)]	Code No.
ChangeOver⁶ insulation	15	B2	**003Z3159**

[1)] According to DIN 4102

Ordering *(continued)*

Accessory

Picture	Type	To pipe	To valve	Code No.
	Union connection (1 pcs.) (CW617N)	Rp ½	DN 15	**003Z0232**
	Union connection (1 PCS.) (CW617N)	Rp ¾	DN 20	**003Z0233**
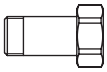	Long union connection (1 pcs.) (CW617N)	Rp ½	DN 15	**003Z3161**
	Long union connection (1 pcs.) (CW617N)	Rp ¾	DN 20	**003Z3162**

Technical data

Actuator		ChangeOver⁶		NovoCon ChangeOver⁶
Power supply	V	24 AC -10%; +15%	230 AC ± 10%	24 AC/DC ±25%
Operating power consumption	VA	Running: 3 VA Standby: 0.5W	Running: 4 VA Standby: 2.6W	Running: 3.5VA@24V AC / 2.0W@24V DC Standby: 0.5W@24V AC / 0.3W@24V DC
Frequency	Hz	50/60		50/60
Running speed	sec/90°	120		120
Control input		2-point		Controlled by from NovoCon® S CO6, Energy, I/O
Feed back signal		/		Unable to move, Cooling, Moving from Cooling towards Heating, Shutt-off, Moving from Heating towards Cooling, Heating
Operating torque	Nm	10		10
Rotation angle		90 °		90°
Ambient temperature	°C	0 … 50		5 … 50
Storage and transport temperature	°C	–20 … 70		-20 … 70
Ambient humidity		95% r.h., non-condensing		95% r.h., non-condensing (according to EN 60730-1)
Protection Class		III (for 24V version) / II (for the 230V version)		III safety extra-low voltage
Grade of enclosure		IP53 according to EN 60529		IP53 according to EN 60529
Weight	g	650		600
Connection cable	m	1.5		1.0
Connection cable	mm^2	3×0.5 (halogen free)		003Z8520: 5x0.32 (halogen free) 003Z8521: 5x0.32 (halogen free. Sensors PVC) 003Z8522: 4x0.5 (halogen free)
CE- marking in accordance with standards		Applied standards: EN 60730	Low Voltage Directive EMC-Directive RoHS II: 2011/65/EU	

Valve

DN		15	20
Diff. pressure [1]	kPa	0.7 (at 200l/h = 100% flow of AB-QM DN15 LF) 7.3 (at 650l/h = 100% flow of AB-QM DN15) 25 (at 1200l/h = 100% flow of AB-QM DN15HF)	7.6 (at 1100l/h = 100% flow of AB-QM DN20) 22.6 (at 1900l/h = 100% flow of AB-QM DN20HF)
k_{vs}	m^3/h	2.4	4.0
k_{vs} of one port	m^3/h	3.4	5.65
Nominal pressure	PN	16	
Medium temperature	°C	0 … 90	
Medium		Water and water mixture for closed heating and cooling systems according to plant type I for DIN EN 14868. When used in plant Type II for DIN EN 14868 appropriate protective measures are taken. The requirements of VDI 2035, part 1 + 2 are observed.	
Max. operating torque	Nm	3.0	
Shut off [2]	kPa	800	
Valve neck		Quick fix connection	
Connection		Internal thread : Rp 1/2″ (ISO 7/1)	Internal thread : Rp 3/4″ (ISO 7/1)
Certifications and standards		PED directive 2014/68/EU Art. 4§	
Weight	g	1140	1750
Materials			
Body and connection		CW 602 N (DZR)	
Ball		CW 614 N Chrome plated	
Stem		CW 614 N Nickel plated	
Seals		P.T.F.E. (TEFLON)	
O-ring		70 EPDM 281	

[1] *differential pressure for both ports*
[2] *manual override (for service purposes only)*

Installation positions

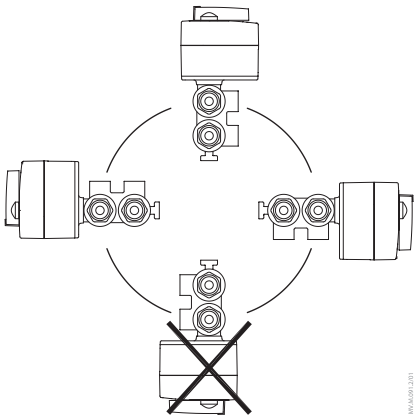

ChangeOver⁶ & NovoCon ChangeOver⁶

Application principles

ChangeOver⁶

2 connections to the controller.

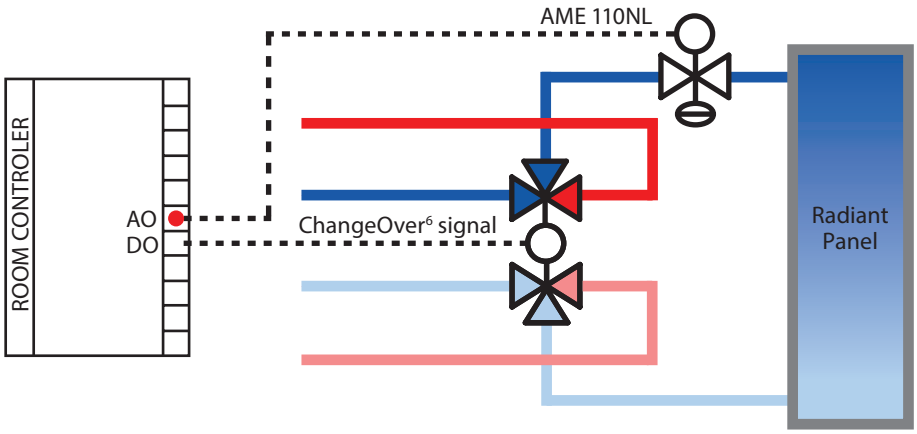

Application principles

NovoCon ChangeOver⁶

Separate maximum flow presetting for cooling and heating is possible in NovoCon® S. Feedback signal and alarms are also available.

Only one connection to the controller.

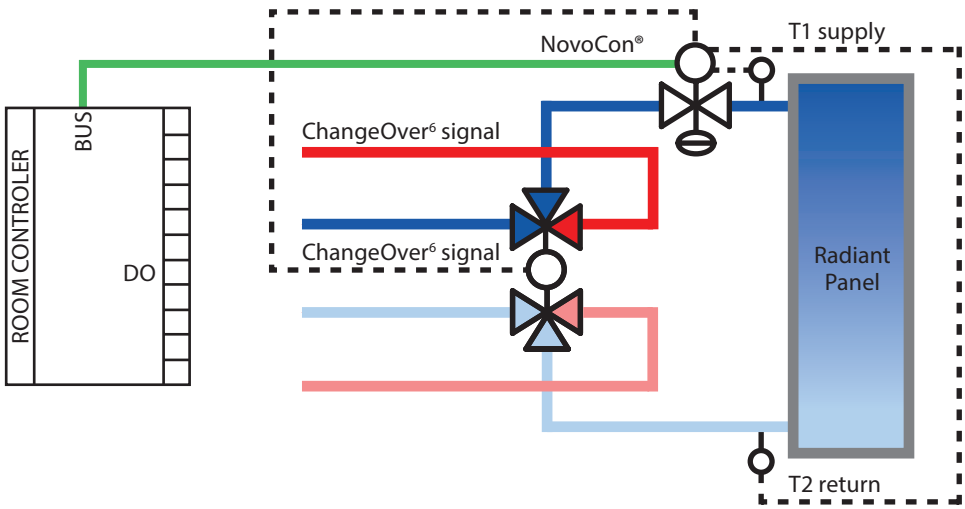

Application principles ChangeOver⁶

The ChangeOver⁶ is a 6-port valve with rotary actuator that switches the flow between heating and cooling. An AB-QM pressure independent balancing and control valve with actuator is used to balance the system and modulate the flow. For modulating control, the AME 110NL actuator should be used. For fieldbus control (BACnet or Modbus) NovoCon® S should be used.

Anti-sticking requirements:
To reduce the risk of the ball valve sticking due to water quality, the valve must be partially rotated at least every 7 days. An operation at least once per week to reduce the risk of higher toque loading on the actuator. Reversing the control signal for a maximum of 60 seconds will rotate the valve through 45 degrees to the zero flow position without changing between heating and cooling.

Cooling:

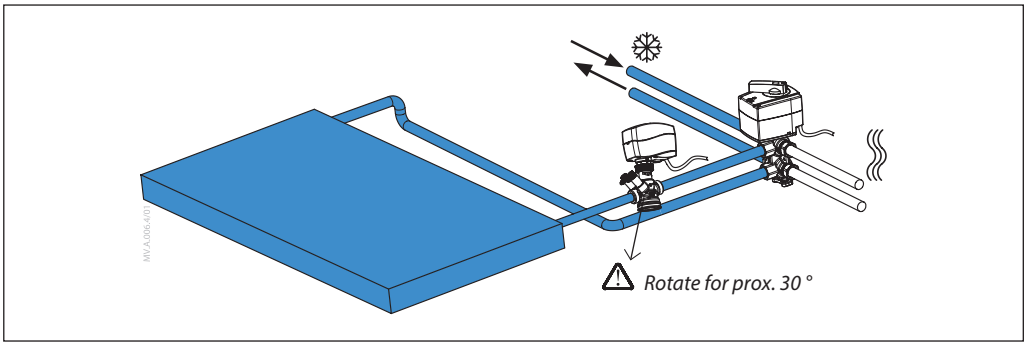

Heating:

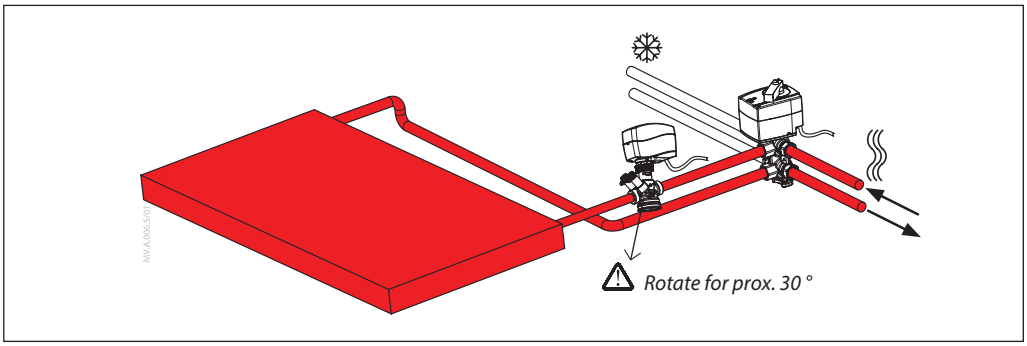

Application principles NovoCon ChangeOver⁶

The ChangeOver⁶ is a 6-port valve with rotary actuator that switches the flow between heating and cooling. An AB-QM pressure independent balancing and control valve with actuator is used to balance the system and modulate the flow. When using the NovoCon® S for flow control, both NovoCon® S and the Actuator NovoCon® ChangeOver⁶ are controlled by one single data point.

Anti-sticking requirements:
To reduce the risk of the ball valve sticking due to water quality, the valve must be partially rotated at least every 7 days. By default this is handled by NovoCon® S.

Cooling:

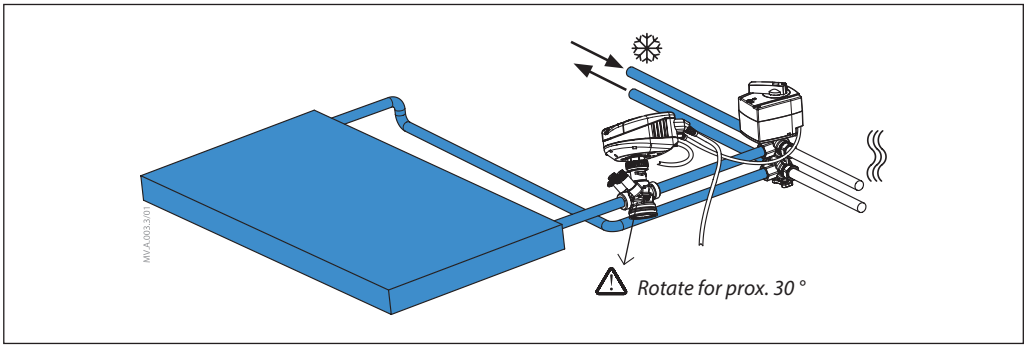

Heating:

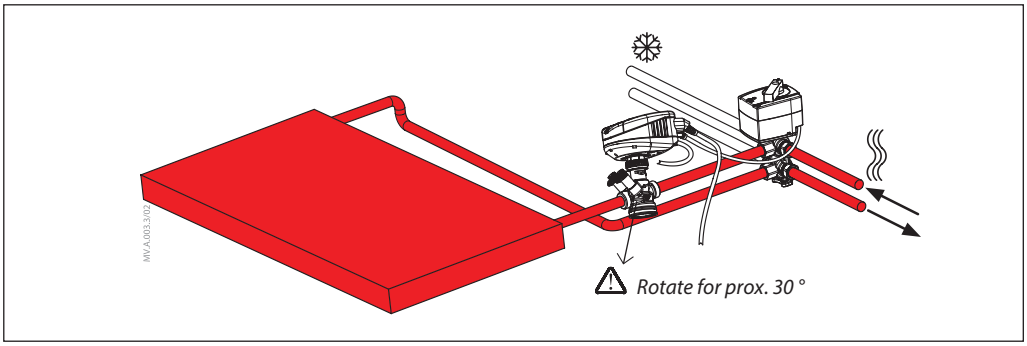

Marking

The 6 ports of the ChangeOver⁶ valve allow the following flow directions.

	Control signal - 0 VAC (brown wire)**:** Port 1 to port 2 and port 3 to port 4
	Control signal - 24(230) VAC (brown wire)**:** Port 5 to port 2 and port 3 to port 6
	Heating or cooling distribution pipes Ports 1, 4, 5 and 6
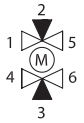	**Terminal unit pipes** Ports 2 and 3

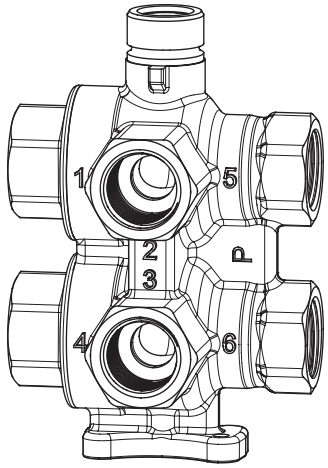

No mixing

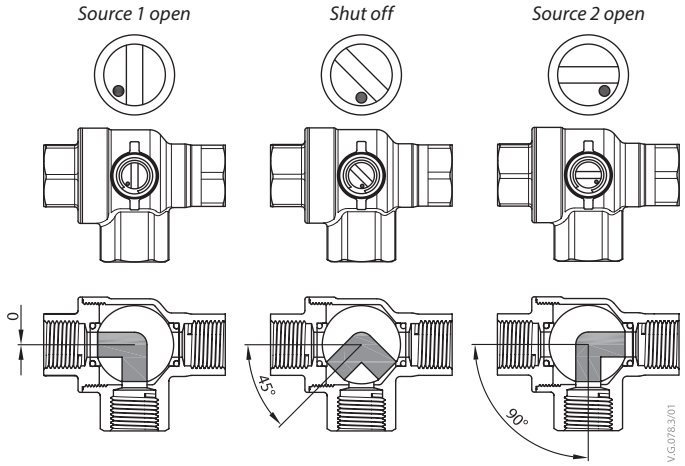

Shut off and manual override for service purposes only

CO6 in contrary to other ball valves includes shut off function. This function can be used only during maintenance and replaces the need of four ball valves.

Design flow setting for heating and cooling
(in case of using only one AB-QM as shown on picture above)

ChangeOver⁶

The design flow needed for heating is generally less than for cooling. Actuator AME 110NL supports this difference by proportionately limiting the control voltage with a linear characteristic. The NovoCon® S enables different design flows to be set via fieldbus communication. See the example below.

Example:

- AB-QM 4.0 DN15 factory setting 100% = 650 l/h
- Cooling: - ChangeOver⁶ set to cooling - control signal 0 V,
  - PIBCV max. flow demand to terminal unit ~585 l/h = 90% presetting of AB-QM DN15
  - Control signal to AME = 0 - 10 V
- Heating: - ChangeOver⁶ set to heating - control signal 24 V,
  - PIBCV max. flow demand to terminal unit ~286 l/h (=44% of AB-QM DN15 flow), presetting of AB-QM DN15 equal to cooling,needed desgn flow achieaved by voltage limitation on AME.
  - Control signal to AME = 0 - 5 V

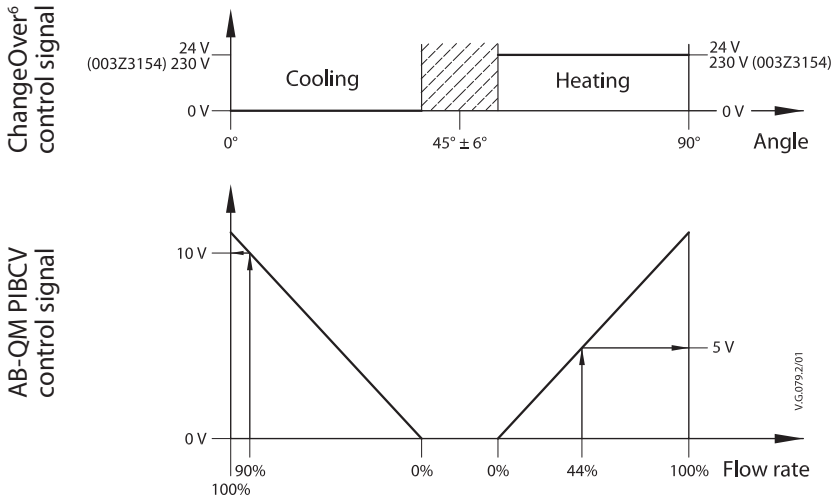

Control signal

NovoCon ChangeOver⁶

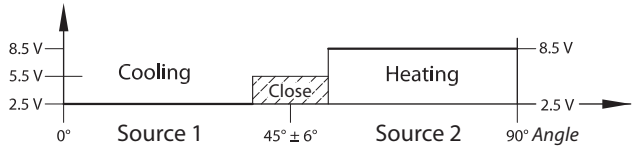

Cooling connected to port 1 and 4 Heating connected to port 5 and 6

Control signal for the Actuator NovoCon ChangeOver⁶

	Stop moving	Cooling	Shut-off	Heating
CO6 mode	1.0 V	2.5 V	5.5 V	8.5 V

Feedback signal from the Actuator NovoCon ChangeOver⁶

Unable to move	Cooling	Moving direction: Cooling to Heating	Shut-off	Moving direction: Heating to Cooling	Heating
1.0 V	2.5 V	4.0	5.5 V	7.0 V	8.5 V

Pump head calculation

To calculate required pump head:
- determine the critical circuit;
- calculate pump head without ChangeOver⁶ solution (ChangeOver⁶ + AB-QM);
- starting pressure for ChangeOver⁶ DN15 solution is ~23.3kPa (ChangeOver⁶ 7.3kPa + AB-QM DN15 16kPa);
- add the starting pressure to the pump head.

LED signalling

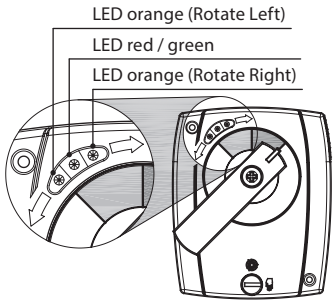

	NovoCon ChangeOver⁶	ChangeOver⁶
LED signal	**Description of signal**	**Description of signal**
Left/CCW yellow shining	Rotating CCW	Rotating CCW Full brightness = Turning in progress Half brightness = Reached end position
Right/CW yellow shining	Rotating CW	Rotating CW Full brightness = Turning in progress Half brightness = Reached end position
Green blinking	Normal operation / invalid signal received	-
Green shining	Normal operation	-
Red blinking	Valve stuck	-
Red shining	Break of line/no signal	-

There are combinations of more than one LED possible. In such cases the actual condition is sum of all indications (for example: red blinking, left yellow shining, green shining = rotating CCW, valve stuck)

Wiring

Under cover

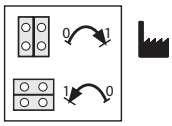

Actuator ChangeOver⁶ (003Z3152 & 003Z3153)

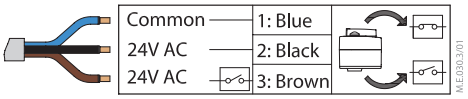

Actuator ChangeOver⁶ (003Z3154)

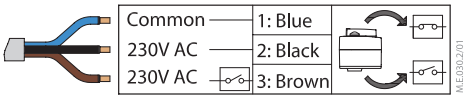

Actuator NovoCon ChangeOver⁶

- Plug in cable to NovoCon® S

Position for heating and cooling can be inverted by changing settings in the NovoCon S actuators.

Actuator NovoCon ChangeOver⁶ Energy

- Plug in cable including 2xPT1000 surface temperature sensors to NovoCon® S

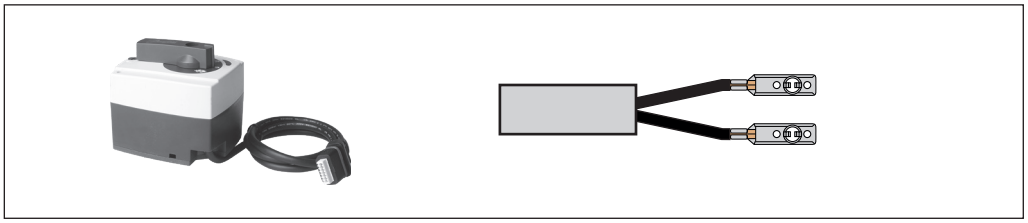

Actuator NovoCon® ChangeOver⁶ Flexible

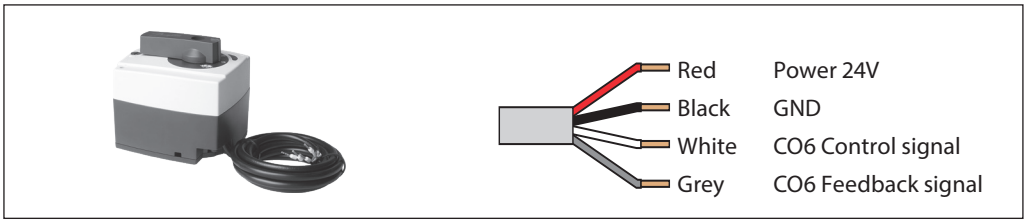

Design

1. Valve body
2. Connection
3. Ball with L-bore
4. Ball sealing with O-ring
5. Spindle with double O-ring
6. Connection spindle with O-ring
7. Actuator
8. Actuator connection pin
9. Snap ring

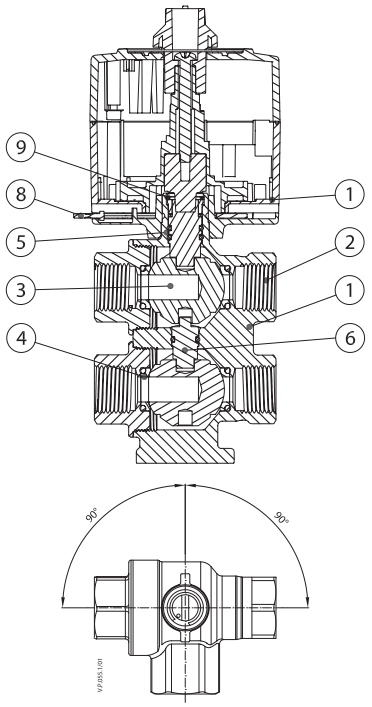

ChangeOver⁶ & NovoCon ChangeOver⁶

Manual override
(for service purposes only)

Caution:
Do not manually operate the drive if power is connected!

If manual override has been used when power is connected actuator will always return to its end position.

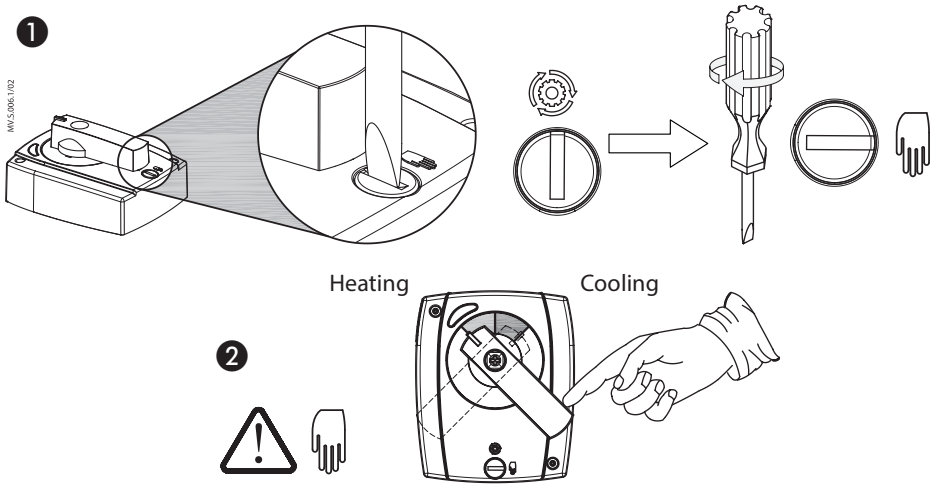

Dimensions

ChangeOver⁶ & NovoCon ChangeOver⁶

DN15/20

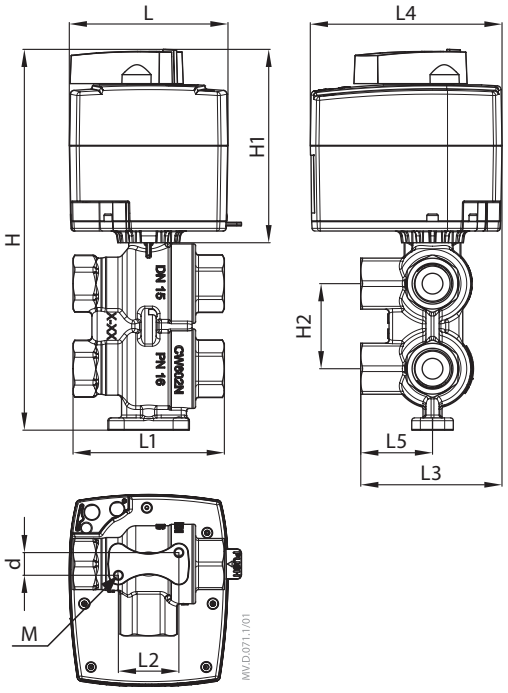

DN	L	L1	L2	L3	L4	L5	H	H1	H2	d	M
	mm										
15	84	80	32	82	101	38	~205	~98	45	12	M5
20		92	35	87		46	~225		60		

Tender text: ChangeOver⁶

The Danfoss ChangeOver⁶ is a 6-port motorized ball valve that switches flow between a heating and cooling water circuit in a 4-pipe system and eliminates cross-flow. A single digital signal switches between heating and cooling, and flow control must be performed by a separate pressure independent control valve that can modulate flow rates to suit the heating and cooling circuits.

ChangeOver⁶ valve:
- Differential pressure drop over the ChangeOver⁶ valve:
- Differential pressure drop over the valve DN15 is <7.3 kPa for 650l/h, KVS is fixed at 2.4 m3/h
- Differential pressure drop over the valve DN20 is <7.6 kPa for 1100l/h, KVS is fixed at 4 m3/h
- No cross-flow between the heating and cooling circuits
- Manual shut off up to 8 bar
- Dezincification resistant brass (DZR)
- Medium temperature range 0°C to 90°C

ChangeOver⁶ actuator:
- Supply Voltage: 24V AC±20% 50-60Hz, or 230V AC±10% 50Hz
- 2 point control input: 24V AC or 230V AC (seperate code)
- Manual override
- Halogen free cable: 1.5m or 5m 24V AC
- Rotation angle: 90 degrees
- Rotating torque: 10 Nm
- IP Class: 53

A separate tender text is available for the Danfoss AB-QM pressure independent balancing & control valve and the AME110NL 0-10V geared actuator and the NovoCon® S BACnet and ModBus geared actuator.

Tender text: NovoCon ChangeOver⁶

In a 4-pipe ChangeOver⁶ system switching flow between heating and cooling circuits is done with a 6-port motorized ball valve, connected directly to digital PIBCV actuator.
Flow control for heating and cooling circuit is performed by a separate pressure independent control valve and modulating actuator. [1)]

6-port ball valve:
- Differential pressure drop over the valve DN15 is <7.3 kPa for 650l/h, KVS is fixed at 2.4 m3/h
- Differential pressure drop over the valve DN20 is <7.6 kPa for 1100l/h, KVS is fixed at 4 m3/h
- No cross-flow between the heating and cooling circuits up to 8 Bar
- Dezincification resistant brass (DZR)
- Medium temperature range 0°C to 90°C
- Zero leakage shut-off functon for maintenance

6-port ball valve actuator:
- Supply Voltage: 24V AC/DC
- Manual and remote shut off function for maintenance
- Feedback signal for valve position
- LED status indication including alarms for valve blocked or missing signal
- Plug in cable, optional with 2x temperature sensors: 1m or open end 2m cable.
- Power consumption: <4 VA running and 0.5W standby
- Click on mounting

[1)] A separate tender text is available for the Danfoss AB-QM pressure independent balancing & control valve and NovoCon® S fieldbus actuator.

Danfoss A/S
Climate Solutions • danfoss.com • +45 7488 2222

Any information, including, but not limited to information on selection of product, its application or use, product design, weight, dimensions, capacity or any other technical data in product manuals, catalogues descriptions, advertisements, etc. and whether made available in writing, orally, electronically, online or via download, shall be considered informative, and is only binding if and to the extent, explicit reference is made in a quotation or order confirmation. Danfoss cannot accept any responsibility for possible errors in catalogues, brochures, videos and other material.
Danfoss reserves the right to alter its products without notice. This also applies to products ordered but not delivered provided that such alterations can be made without changes to form, fit or function of the product.
All trademarks in this material are property of Danfoss A/S or Danfoss group companies. Danfoss and the Danfoss logo are trademarks of Danfoss A/S. All rights reserved.