ENGINEERING
TOMORROW

Data sheet

Actuators for 3-point control

AMV 655 – without safety function
AMV 658 SU, AMV 658 SD – with safety function (spring up/down)

Description

Actuators are primarily designed to control the valve in response to the demand of a controller in District Heating/cooling, Heating, Ventilating and Air conditioning systems.

Actuators AMV 655 and 658 can be controlled by electronic controllers with 3-point output.

Actuators can be used without any adapter in combination with:
- Valve types VFM, VFS (DN 65-100), VF (DN 100-150) and VL (DN 100)
- Self-acting flow controller AFQM 6 and AFQM*.

* *With adapter 065B3527 for AFQM 6 or AFQM PN 25, if produced before March 2015.*

Used with adapter 065B3527 in combination with:
- Valve types VFG(S) and VFU.

Features:
- Manual operation mechanical and/or electrical
- Position indication, LED signalization
- Selectable speed 2 or 6 s/mm
- Integrated auxiliary switch
- External reset button
- 3-point control regulation
- Thermal and overload protection
- Precise control and fast response in 3-point mode (0.01 s)

Main data:
- Nominal voltage (ac or dc):
  - 24 V, 50 Hz/60 Hz
  - 230 V, 50 Hz/60 Hz
- Control input signal: 3-point
- Force: 2000 N
- Stroke: 50 mm
- Speed (selectable): 2 or 6 s/mm
- Max. medium temperature: depends on valve type. (from 150°C up till 300°C)

Ordering

Actuator

Picture	Type	Power supply (V)	Code No.
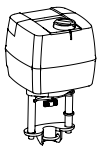	AMV 655	24	**082G3440**
		230	**082G3441**
	AMV 658 SU	24	**082G3446**
		230	**082G3447**
	AMV 658 SD	24	**082G3444**
		230	**082G3445**

Accessories – **Stem heater**

Type	DN	Code No.
Stem heater for VFM valve	65-250	**065Z7022**

Accessories – **Adapter**

Type	Code No.
Adapter for VFG/S, VFU and AFQM 6 & AFQM PN 25 if produced before March 2015.	**065B3527**

Technical data

Please check power supply and power consumption prior connection!

Actuator type		AMV 655	AMV 658 SD	AMV 658 SU
Power supply	V	24 or 230 ; +10 … −15 % ; ac or dc		
Power consumption	VA	12 (24 V) 21 (230 V)	19 (24 V) 28 (230 V)	
Frequency	Hz	50/60		
Control input		3-point		
Closing force	N	2000		
Max. stroke	mm	50		
Speed (selectable)	s/mm	2 or 6		
Max. medium temperature	°C	Depends on valve type. No limitations for 150°C (VFS, VF 125 & 150 up to 200°C), for higher temperature see page 3, INSTALLATION		
Ambient temperature	°C	0 … + 55		
Storage and transport temperature	°C	−40 … +70 (storing for 3 days)		
Humidity		5-95% (no condensing)		
Protection class		II		
Grade of enclosure		IP 54		
Weight	kg	5.3	8.6	8.6
Safety function		-	Yes	Yes
Safety function runtime/50 mm stroke	s	-	120	120
Manual operation		Mechanical	Electrical and mechanical	Electrical and mechanical
Power failure response		Stem remains in last position	Safety function extends the stem	Safety function retracts the stem
CE – marking in accordance with the standards		Low Voltage Directive (LVD) 2014/35/EU: EN 60730-1, EN 60730-2-14 Electromagnetic Compatibility Directive (EMC) 2014/30/EU: EN 61000-6-2, EN 61000-6-3		

Commissioning

Complete the mechanical and electrical installation (see instructions) and perform the necessary checks and tests:

- Turn on the power
- Set the appropriate control signal and check that the valve stem direction is correct for the application.

The unit is now fully commissioned.

© Danfoss | 2022.02

Design

1. Manual operation knob
2. Function buttons
3. Service cover
4. Removable gland support
5. End position indication ring
6. Stem connector
7. Valve connector (*yoke*)

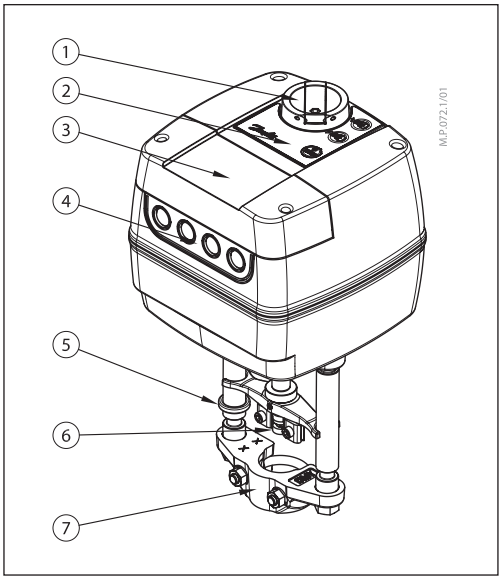

Installation

Mechanical

Please check the allowed installation positions for the valve and actuator. The actuator can be installed in all positions (*see below*).

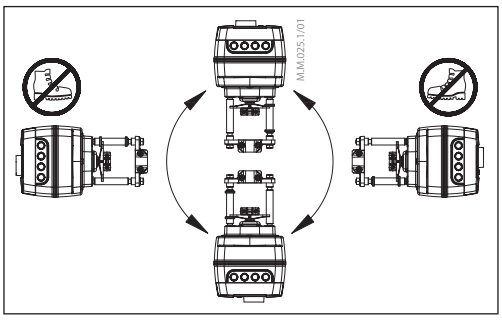

Use a M8/SW13 key (not supplied) to fit the actuator to the valve body. Allow for necessary clearance for maintenance purposes. To link valve and actuator stems use a 4mm Allen key (not supplied). The actuator has position indication rings which should be pushed together before el. connection; after self-stroking they indicate end positions of the stroke.

Electrical connection

Electrical connections can be accessed by removing the service cover.

Four cable entries are provided for M 16×1.5 or M 20×1.5 cable glands. Note that in order to maintain the enclosure's IP rating, appropriate cable glands must be used.

	Code No.
ZF 4	003G1394
ZF 5	003G1396

<150°C	150-200°C ZF4 200-350°C ZF5
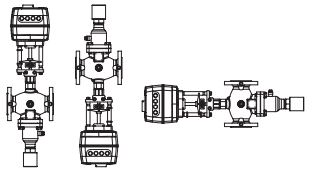 *VFU 2 + adapter* **065B3527**	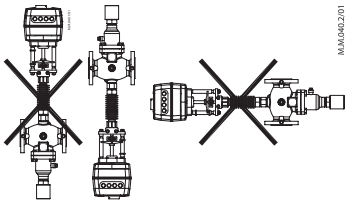 *VFU 2 + adapter* **065B3527** *+ ZF4/5*
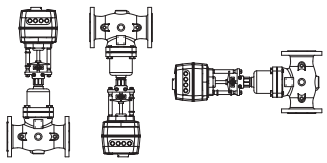 *VFG/S + adapter* **065B3527**	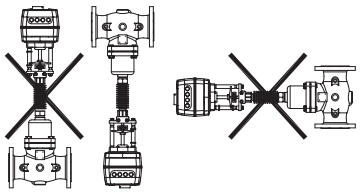 *VFG/S + adapter* **065B3527** *+ ZF4/5* *VFGS + adapter* **065B3527** *+ ZF5 (DN 15-125)*

Wiring

Do not touch anything on the PCB! Do not remove the service cover before the power supply is fully switched off.
Max. allowed current output on terminals 4 and 5 is 4A.
Min. power is 3W.

Recommended cross-sectional area of the wiring is 1.5 mm²

AMV 658

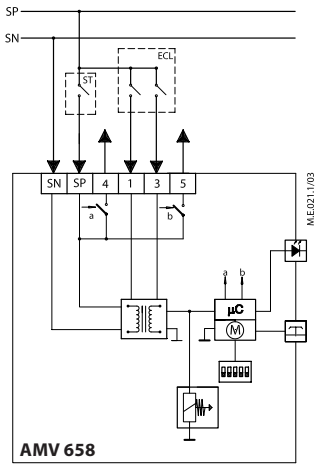

24V
230V

SN	0 V		Neutral
SP	24, 230 V ac/dc		Power supply
4, 5	SP(ac)	SP 4 5	SP output -max 4A -min 3W
1	SP	INV ON 2 DIR	Input
3	SP	INV ON 2 DIR	Input

AMV 655

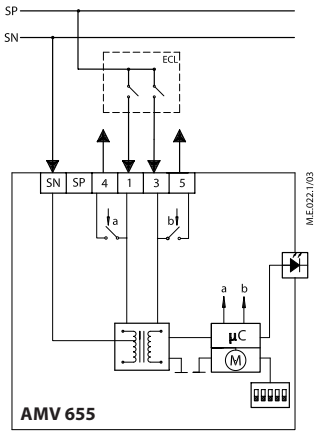

24V
230V

SN	0 V		Neutral
1, 3	24, 230 V ac/dc		Power supply
4, 5		1 4 3 5	SP output -max 4A -min 3W
1	SP	INV ON 2 DIR	Input
3	SP	INV ON 2 DIR	Input

© Danfoss | 2022.02

Actuator operating modes

LED operating mode indicator
The three-colour (green/yellow/red) LED function indicators are located on the actuator cover. They indicate different operating modes.

RESET button (versions AMV 658)
Actuators AMV 658 have external RESET button which is located on top cover of the actuator next to LED indicators. With this button you can enter or exit Stand-By mode (press once) See next paragraph for mode details.

Operating modes

- **Stand-By mode** (versions AMV 658)
  Press the RESET button for 1 sec. to enter Stand-By mode. The actuator stops in current position and stops responding to any control signal. Red light is constantly lit. You can manually operate the actuator with mechanical handle (version AMV 655/658) or control buttons (versions AMV 658). This mode can be very useful during the commissioning of other equipment, or for service purposes. To exit Stand-By mode press the RESET button again.
- **Positioning mode**
  The actuator is operating automatically. The stem is extending or retracting according to the control signal. When positioning is finished the actuator goes to Stationary mode.
- **Stationary mode**
  The actuator is operating without errors.
- **Error mode**
  Working temperature is too high - check the ambient temperature.
  Stroke is too short - check the connection with valve and valve operation or check if valve is blocked.

LED signalling

LED indication for AMV 655/658

NOTE! LED signalling is a direct indicator of the signal from controller therefore lengths of LED indication can vary and sometimes even look like a short flash if the controlling signal is present for a very short period.

Actuator type AMV 655 doesn't have constant power supply and operates only when the controller provides a signal. Therefore limited LED indication possibilities are available.

LED	Indication type		Operating mode	Actuator type
Green		Constantly lit	Positioning mode - Actuator is retracting the stem	AMV 655 AMV 658
	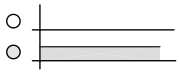	Constantly lit	Positioning mode - Actuator is extending the stem	AMV 655 AMV 658
Yellow	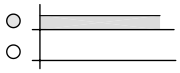	Constantly lit	Stationary mode - Actuator has reached upper end position (retracted stem)	AMV 655 AMV 658
	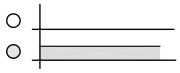	Constantly lit	Stationary mode - Actuator has reached bottom end position (extending stem)	AMV 655 AMV 658
	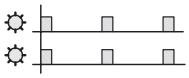	Flashing	Stationary mode	AMV 658
Red		Constantly lit	Stand - By mode	AMV 658
	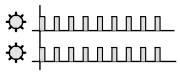	Flashing	Error Mode	AMV 655 AMV 658
Dark	No indication		No power supply	AMV 655 AMV 658
			No control signal	AMV 655

DIP switch setting

The actuator has a selection of DIP switches (Fig. 1) under the service cover.

DIP1: FAST/SLOW – Speed selection
- FAST; 2 s/mm
- SLOW; 6 s/mm

DIP2: DIR/INV – Direct or inverse acting selector (Fig. 2)**:**
- DIR position; the actuator is direct acting to input signal.
- INV position; the actuator is (reverse) inverse acting to input signal.

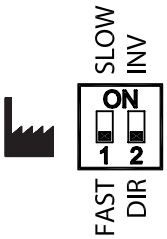

Fig. 1

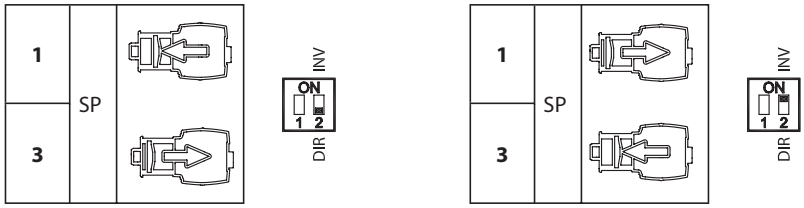

Fig. 2

Manual operation

Mechanical and electrical operation are not allowed to be used at the same time!

The actuator AMV 655 can be manually positioned and remains in selected position until it receives signal from the controller.
The actuator AMV 658 can be manually positioned when in Stand-By mode or when there is no power supply (mechanically).

Actuator type	Mechanical operation	Electrical operation
AMV 655	✓	×
AMV 658	✓	✓

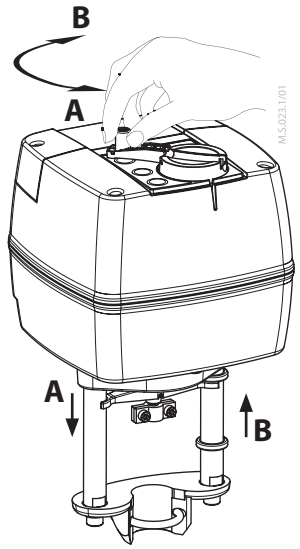

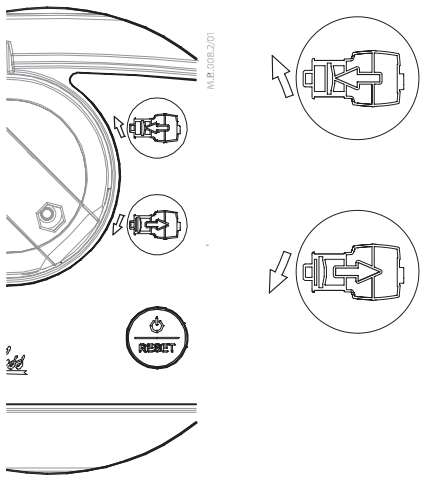

Mechanical manual operation
Actuators AMV 655/658 have a knob & crank on the top of the housing which enables hand positioning of the actuator.

Use Mechanical manual operation only when the power is disconnected.

Electrical manual operation
The actuator AMV 658 has two buttons on the top of the housing that are used for electrical manual positioning (up or down) if the actuator is in Stand-By mode. First press the RESET button until the actuator goes to Stand-By mode (red LED is lit). By pressing the upper button the stem will be extending and by pressing the lower button the stem will be retracted.

© Danfoss | 2022.02

Actuator – valves combinations

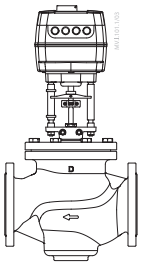

AMV 65x +
VFM 2

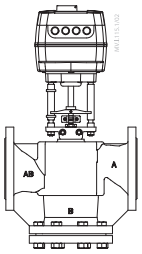

AMV 65x +
VF 2 (DN 100-150)
VL 2 (DN 100)
VFS 2 (DN 65-100)

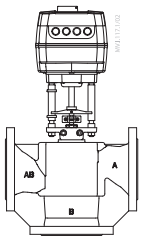

AMV 65x +
VF 3 (DN 100-150)
VL 3 (DN 100)

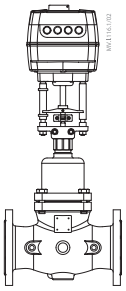

AME 65x +
VFG + adapter **065B3527** *+ ZF 4/5*
VFGS + adapter **065B3527**
+ ZF5 (DN 15-125)

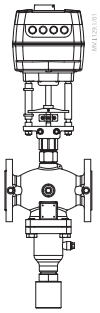

AMV 65x +
VFU +
adapter:
065B3527 *(DN 15-125)*

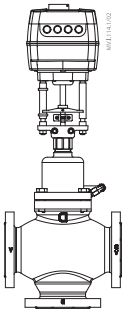

AMV 65x +
VFG 3 +
adapter:
065B3527 *(DN 25-125)*

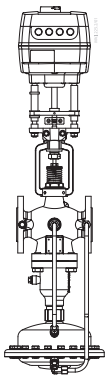

AMV 65x +
*AFQM 6 **

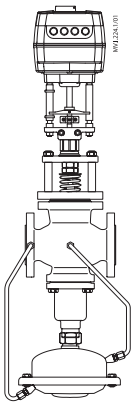

AMV 65x +
AFQM PN 16 (DN 65-125)

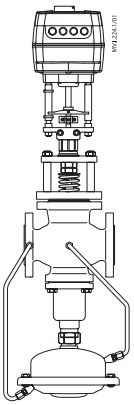

AMV 65x +
*AFQM PN 25 **

** Please use adapter 065B3527 for combination with AFQM PN25 & AFQM 6 if produced before March 2015.*

Dimensions

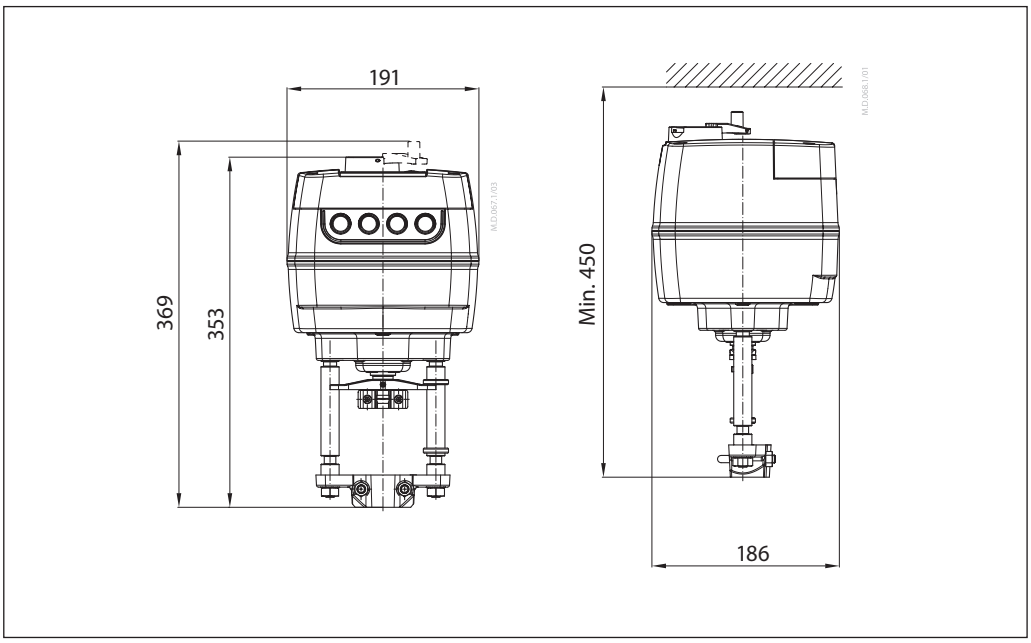

Danfoss A/S
Climate Solutions • danfoss.com • +45 7488 2222

Any information, including, but not limited to information on selection of product, its application or use, product design, weight, dimensions, capacity or any other technical data in product manuals, catalogues descriptions, advertisements, etc. and whether made available in writing, orally, electronically, online or via download, shall be considered informative, and is only binding if and to the extent, explicit reference is made in a quotation or order confirmation. Danfoss cannot accept any responsibility for possible errors in catalogues, brochures, videos and other material.
Danfoss reserves the right to alter its products without notice. This also applies to products ordered but not delivered provided that such alterations can be made without changes to form, fit or function of the product.
All trademarks in this material are property of Danfoss A/S or Danfoss group companies. Danfoss and the Danfoss logo are trademarks of Danfoss A/S. All rights reserved.