ENGINEERING
TOMORROW

Data sheet

Actuators for modulating & floating control

AME 655-1, AME 685-1 – without safety function
AME 658 SU-1, AME 658 SD-1 – with safety function (spring up/down)

Description

The AME 655-1, 658 SU/SD-1 and 685-1 series of motor actuators are suitable in providing valve control to the demands of district heating/ cooling, heating, ventilation, and air conditioning applications.
The AME658 series of actuator provides safety function in either open or closing of the valve in the event of power loss. For the AME 655-1 and AME 685-1 this feature is not included.

The actuators can be wired in either a modulating or floating control dependent on the requirements of the electronic controller's output.

The motor actuators AME 65x are assembled with the AB-QM series of pressure independent control valve for the sizes ranging from 5" (DN 125) to 6" (DN 150).

The motor actuators AME 685-1x are assembled with the AB-QM series of pressure independent control valve for the sizes ranging from 8" (DN 200) to 10" (DN 250).

Features:

- Manual operation mechanical and/or electrical
- Position indication, LED signalization
- Selectable speed 2 or 6 s/mm for AME 655-1
- Selectable speed 4 or 6 s/mm for AME 658 SU/SD-1
- Selectable speed 3 or 6 s/mm for AME 685-1
- Automatic adaptation of stroke to valve's end positions that reduces commissioning time (*self calibration of actuator travel*)
- Integrated auxilliary switch
- Characteristic optimization
- Adjustable stroke limitation
- Anti-oscillation function
- Pulse or continuous output signal (*4&5*)
- Voltage or current output signal X
- External reset button
- Auto detection of Y signal
- floating or modulating control selection
- Galvanic insulation Y, X and output terminal 4&5
- Thermal and overload protection
- Precise control and fast response in floating mode (0,01 s)
- Last state position. In case of missing voltage or 4-20mA control signal during normal operation the actuator will stay in the last known position, until a valid control signal is present again.

Main data:

- Nominal voltage (AC or DC):
  - 24 V, 50 Hz/60 Hz
- Control input signal: modulating or floating
- Force: - AME 65x -1: 2000N
  - AME 685-1: 4000 N
- Stroke: - AME 65x -1: 32 mm
  - AME 685-1: 32 mm
- Speed (selectable): 2 or 6 s/mm for AME 655-1 and 4 or 6 s/mm for AME 685-1 3 or 6 s/mm.
- Max. medium temperature: 248 °F (120 °C)

Ordering

Actuators

Picture	Type	Valve type	Power supply (V)	Code No.
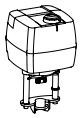	AME 655-1	AB-QM DN 125-150	24	**082H5010**
	AME 658 SU-1	AB-QM DN 125-150	24	**082H5012**
	AME 658 SD-1	AB-QM DN 125-150	24	**082H5011**
	AME 685-1	AB-QM DN 200-250	24	**082H5013**

Technical data

Please check power supply and power consumption prior connection!

Actuator type		AME 655-1	AME 658 SD-1	AME 658 SU-1	AME 685-1
Power supply	V	24; +10 … −15 %; ac or dc			
Power consumption	VA	15			
Frequency	Hz	50/60			
Control input Y	Vdc	0-10 (2-10) [Ri = 40 kΩ]			0-10 (2-10) [Ri = 100 kΩ]
	mA	0-20 (4-20) [Ri = 500 Ω]			
	-	floating point (wiring auto-detection)			
Control output X	Vdc	0-10 (2-10) [Ri = 10 kΩ]			0-10 (2-10) [Ri = 2 kΩ]
	mA	0-20 (4-20) [Ri = 510 Ω]			0-20 (4-20) [Ri = 550 Ω]
Closing force	lbf (N)	450 (2000)			900 (4000)
Max. stroke	mm	32			
Speed (selectable)	s/mm	2 or 6	4 or 6		3 or 6
Max. medium temperature	°F	392 (200 °C)			
Ambient temperature	°F	0 … + 131 (0 … + 55 °C)			
Storage and transport temperature	°F	-40...+158 (-40...+70 °C) (storing for 3 days)			
Humidity		5-95% (no condensing)			
Protection class		II			
Grade of enclosure		IP 54			
Weight	lbs	11.7 (5.3kg)	19 (8.6kg)		13.9 (6.3 kg)
Safety function		-	Yes		-
Safety function runtime/32 mm stroke	s	-	120		-
Manual operation		Electrical and mechanical	Electrical and mechanical	Electrical and mechanical	Electrical and mechanical
Power failure response		Stem remains in last position	Safety function down, closes the AB-QM valve	Safety function up, opens the AB-QM valve fully	Stem remains in last position
CE - marking in accordance with the standards		Electromagnetic Compatibility Directive (EMC) 2014/30/EU: EN 61000-6-2, EN 61000-6-3			

Compliance	**Plenum rated**	Intended for plenum application and provided with non-metallic enclosure investigated according to **UL 2043**, "Fire Test for Heat and Visible Smoke Release for Discrete Products and Their Accessories Installed in Air-Handling Spaces" in accordance with section 300.22(C) of the National Electrical Code".
	United States	**UL Listed, CCN XABE, File E480529; to UL60730-1** - Automatic Electric Controls for Household and Similar Use Part 1: General Requirements, 4th Edition, latest revision dated May, 21, 2014
		UL Listed, CCN XABE, File E480529; to UL60730-2-14 - Automatic Electrical Controls for Household and Similar Use; Part 2: Particular Requirements for Electric Actuators, 2nd Edition dated February, 27, 2013
	Canada	**UL Listed, CCN XABE7, File E480529; to CAN/CSA-E60730-1:13** - Automatic electrical controls for household and similar use - Part 1: General requirements, 4th Edition, dated March, 2013
		UL Listed, CCN XABE7, File E480529; to CAN/CSA-E60730-2-14:13 - Automatic electrical controls for household and similar use - Part 2-14: Particular Requirements for Electric Actuators, 1st Edition, dated March 2013, revised September 2014
	Europe	CE Mark - Danfoss declares that this product complies with all relevant CE-marking directives

© Danfoss | 2022.07

Commissioning

Complete the mechanical and electrical installation (see instructions) and perform the necessary checks and tests:
- Turn on the power
- Set the appropriate control signal and check that the valve stem direction is correct for the application.

The unit is now fully commissioned.

Design

1. Manual operation knob
2. Function buttons
3. Service cover
4. Removable gland support *
5. End position indication ring
6. Stem connector
7. Valve connector (yoke)

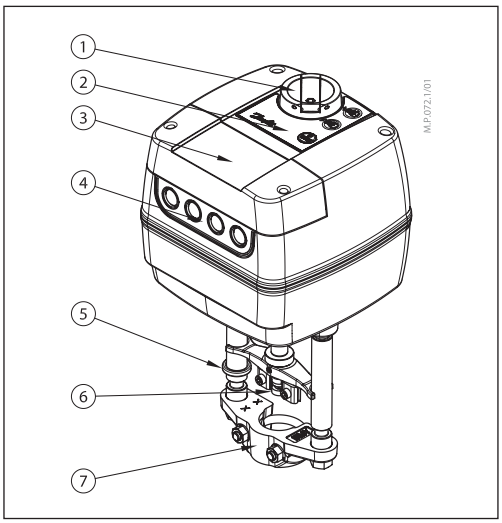

Installation

Mechanical

Please check the allowed installation positions for the valve and actuator. The actuator can be installed in all positions (*see below*).

Installation of the actuator assembly is certified for placement within the plenum airspace.

Use a M8/SW13 key (not supplied) to fit the actuator to the valve body. Allow for necessary clearance for maintenance purposes. To link valve and actuator stems use a 4mm Allen key (not supplied). The actuator has position indication rings which should be pushed together before el. connection; after calibration cycle they indicate end positions of the stroke.

Electrical connection

Electrical connections can be accessed by removing the service cover.

AME 655-1/658 SU-1/658 SD-1/AME 685-1
Four cable entries are provided
- (1) M16x1.5
- (2) M20x1.5
- (1) 1/2”

Note in order to maintain the enclosure’s rating appropriate electrical conduit connectors must be installed.

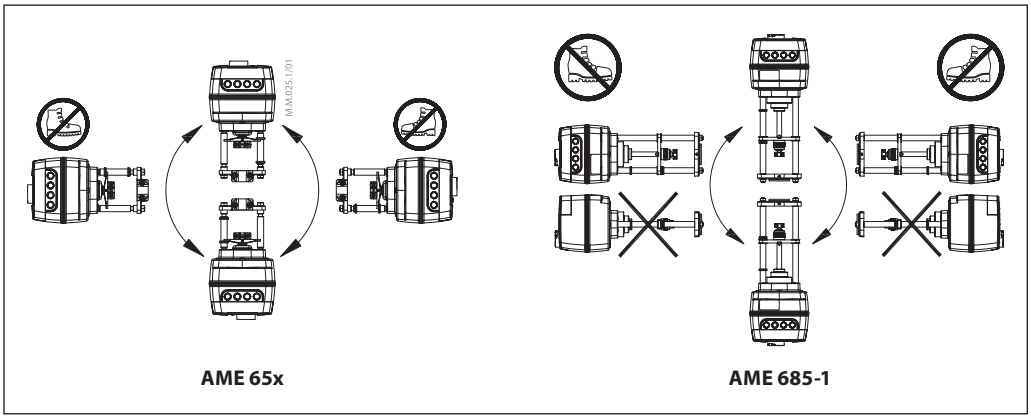

Wiring

Do not touch anything on the PCB! Do not remove the service cover before the power supply is fully switched off.
Max. allowed current output on terminals 4 and 5 is 4A.
Min. power is 3W.

Recommended 16AWG wiring to actuator.

AME 655-1/658 SU-1/658 SD-1/AME 685-1 *wiring for modulating mode*

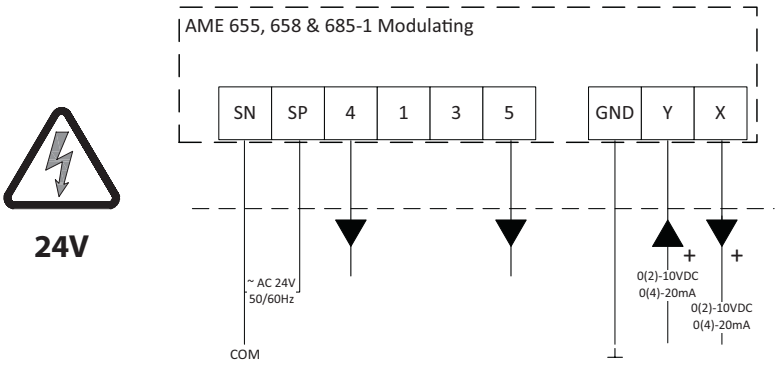

SN	0 V	Neutral
SP	24V AC/DC	Power supply
4, 5	SP(AC) 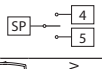	SP output -max 4A -min 3W
1 **3**	SP 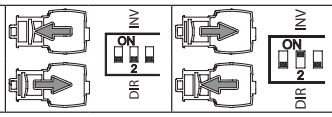	Input
GND	0 V	Neutral
Y	0(2)-10 V 0(4)-20 mA	Input
X	0(2)-10 V 0(4)-20 mA	Output

AME 655-1/658 SU-1/658 SD-1/685-1 *connected as floating point*

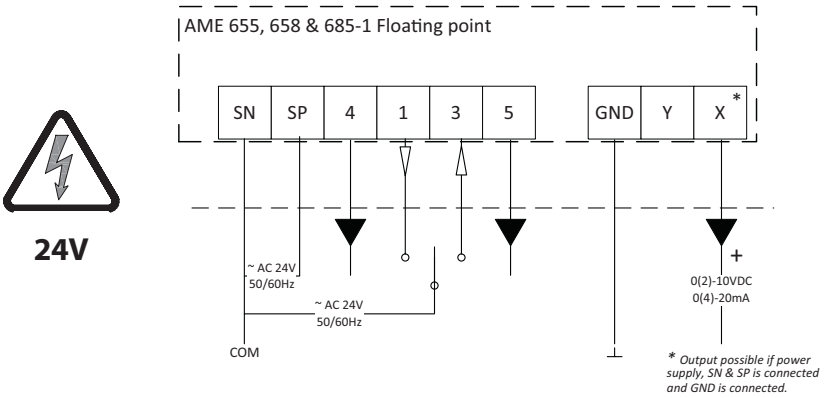

SN	0 V		Neutral
1,3	24V AC/DC		Power supply
4, 5	SP(AC) 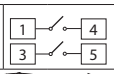		SP output -max 4A -min 3W
1 **3**	SP 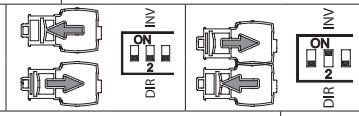		Input
X	Ix 0(4)-20mA	X output possible only when power supply is connected to the SN & SP. GND must be as well connected.	
	Ux 0(2)-10V		

© Danfoss | 2022.07

Actuator operating modes

LED operating mode indicator
The three-colour (green/yellow/red) LED function indicators are located on the actuator cover. They indicate different operating modes.

RESET button
Actuators AME 655-1, 658 and 685-1 have external RESET button which is located on top cover of the actuator next to LED indicators. With this button you can enter or exit Stand-By mode (press once) or calibration mode (press and hold for 5 seconds). See next paragraph for mode details.

Operating modes

- **Calibration mode**
  The calibration of the actuator's travel automatically initiates the first time when power supply is applied to the actuator. To initiate the calibration mode, **press and hold RESET button for 5 seconds** until the green light starts flashing. End positions of the valve are automatically set and the actuator goes to stationary mode and starts responding to the control signal.
- **Stand-By mode**
  (versions AME 655/658)
  Press the RESET button for 1 sec. to enter Stand-By mode. The actuator stops in current position and stops responding to any control signal. Red light is constantly lit. You can manually operate the actuator with mechanical handle or control buttons. This mode can be very useful during the commissioning of other equipment, or for service purposes. In this mode you can also set positions of the additional switches. To exit Stand-By mode press the RESET button again.
- **Positioning mode**
  The actuator is operating automatically. The stem is extending or retracting according to the control signal. When positioning is finished the actuator goes to stationary mode. If for one or another reason floating signal (terminally 1 and 3) and Y signal would be present at the same time, floating signal will take precedence.
- **Stationary mode**
  The actuator is operating without errors.
- **Error mode**
  Working temperature is too high - check the ambient temperature.
  Stroke is too short - check the connection with valve and valve operation, or check if valve is blocked.

LED signalling

LED	Indication type			Operating mode
Green LED:			Constantly lit	Positioning mode - Actuator is retracting the stem
	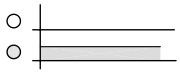	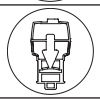	Constantly lit	Positioning mode - Actuator is extending the stem
	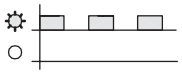		Flashing (1 s cycle)	Calibration mode - Actuator is retracting the stem
			Flashing (1 s cycle)	Calibration mode - Actuator is extending the stem
Yellow LED:	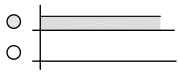	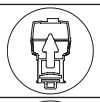	Constantly lit	Stationary mode - Actuator has reached upper end position (retracted stem)
		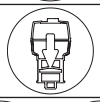	Constantly lit	Stationary mode - Actuator has reached bottom end position (extended stem)
	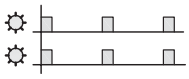	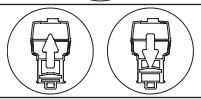	Flashing	Stationary mode - Single blink when Y signal is presents and double blinks when Y signal is not connected)
Red LED:		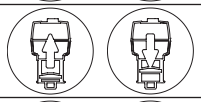	Constantly lit	Stand-By mode
	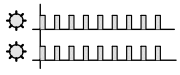	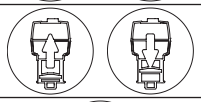	Flashing	Error Mode
Red/ Yellow LED			Flashing (1 s cycle)	Set up stroke limitation (retracted stem)
		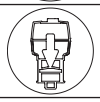	Flashing (1 s cycle)	Set up stroke limitation (extended stem)
Dark	No indication			No power supply

© Danfoss | 2022.07

DIP switch setting

The actuator has a selection of DIP switches (Fig. 1) under the service cover.

DIP1: FAST/SLOW – Speed selection
- FAST; 2 s/mm or 4 s/mm
- SLOW; 6 s/mm

DIP2: DIR/INV – Direct or inverse acting selector (Fig. 2)**:**
- DIR; the actuator is direct acting to input signal
- INV; the actuator is inverse (reverse) acting to control signal

DIP3: 2-10 V/0-10 V – Input/output
- 2-10 V; the input signal is in the range from 2-10 V (voltage input) or from 4-20 mA (current input)
- 0-10 V the input signal is in the range from 0-10 V (voltage input) or from 0-20 mA (current input)
  Signal range selector sets Y and X signal.

DIP4: LIN/MDF – Characteristic modification function (Fig. 3)**:**
- LIN ; Linear correlation between Y signal and stem position
- MDF (Modified) position; Enables modified correlation between Y signal and stem position. Degree of modification depends on setting of potentiometer CM.

The function enables to change **MCV** (**M**otorised **C**ontrol **V**alve) characteristic (for example linear to logarithmic and logarithmic to linear) and works with all combinations of DIP switch settings.

DIP5: 100%/95% – Stroke limitation (fig.4):
- Set new maximum retracted position of the actuator
- Set new minimum extended position of the actuator.

DIP6: C/P – Output signal mode selector (Fig. 5.)**:**
- An output signal is present on terminal 4 when the position of the actuator is equal to or lower than the S4 set point. An output signal is present on terminal 5 when the position of the actuator is equal to or higher than the S5 set point.
- DIP6 position **C** provides a constant output signal on terminals 4 or 5, regardless of the input signal.
- DIP6 position **P** provides a pulse signal through parallel or cascade electrical wiring input 1 and 3 dependents from the controller to output terminals 4 and 5.

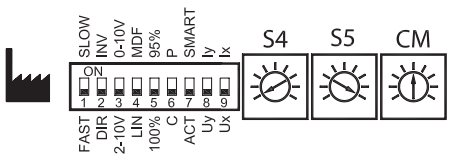

Fig. 1

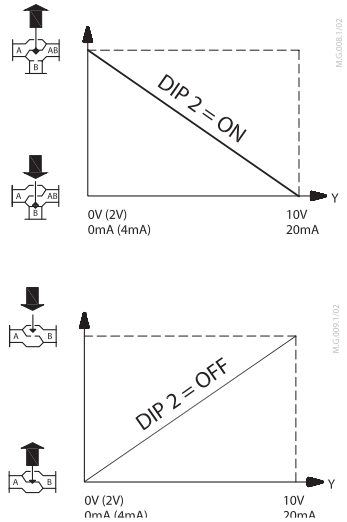

Fig. 2

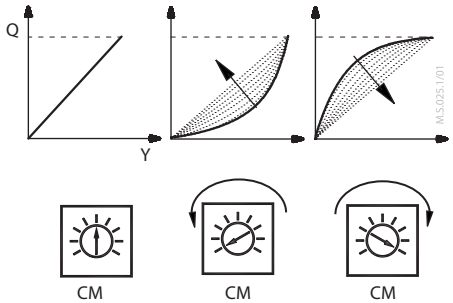

Fig. 3

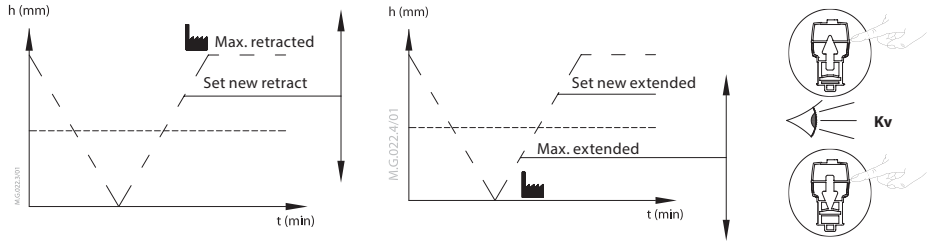

Fig. 4 (For more details see instructions document)

DIP switch setting
(continuous)

DIP7: Smart function selector:
- OFF ; the actuator does not try to detect oscillations in the system
- ON ; actuator enables special anti-oscillation algorithm – see section on anti-oscillation algorithm

DIP8: Uy/Iy –Input signal type selector:
- Uy; input signal Y is set to voltage (V)
- Iy; input signal Y is set to current (mA)

NOTE:
Y detection is disabled if DIP8 is set to ON positions and DIP3 is set to OFF position.

DIP9: Ux/Ix –Output signal type selector:
- Ux; output signal X is set to voltage (V)
- Ix; output signal X is set to current (mA)

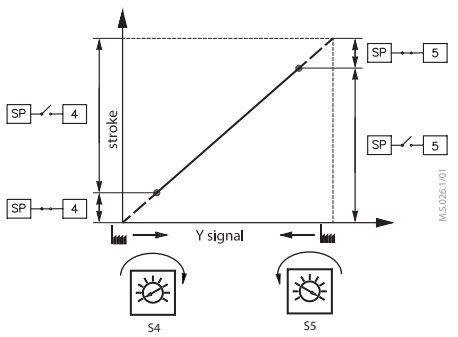

Fig. 5

Anti oscillations algorithm
(SW 7 in position ON)

The actuator has special anti oscillations algorithm. In case control signal Y on certain point oscillates (Fig. 1) - looking from time perspective, algorithm starts to lower the amplification of the ouput to the valve. Instead of having static characteristics actuator changes to dynamic characteristics. After the control signal does not oscillate anymore output to the valve slowly returns back to static characteristics.

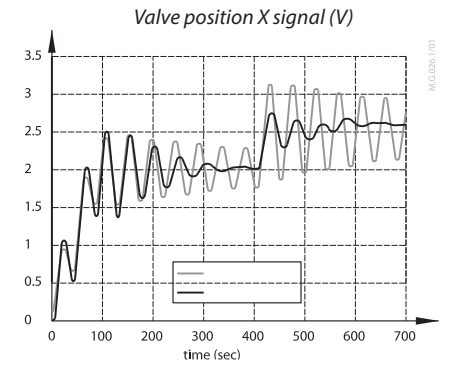

Fig. 1

Oscillation
Harmonic oscillations are high frequency oscillations with low amplitude that vary around its own equilibrium value and not around set-point temperature. They can appear in up to 70 % of control time, even though the system is properly commissioned. Harmonic oscillations have negative influence on control stability, and lifetime of the valve and actuator.

Smoothing function
The smoothing function implemented in the new 2nd generation of anti-oscillation function reduces harmonic oscillations; the actual temperature is closer to the set-point (*desired temperature*). Smoother operation increases lifetime of the valve and actuator. This saves energy and reduces costs in general.

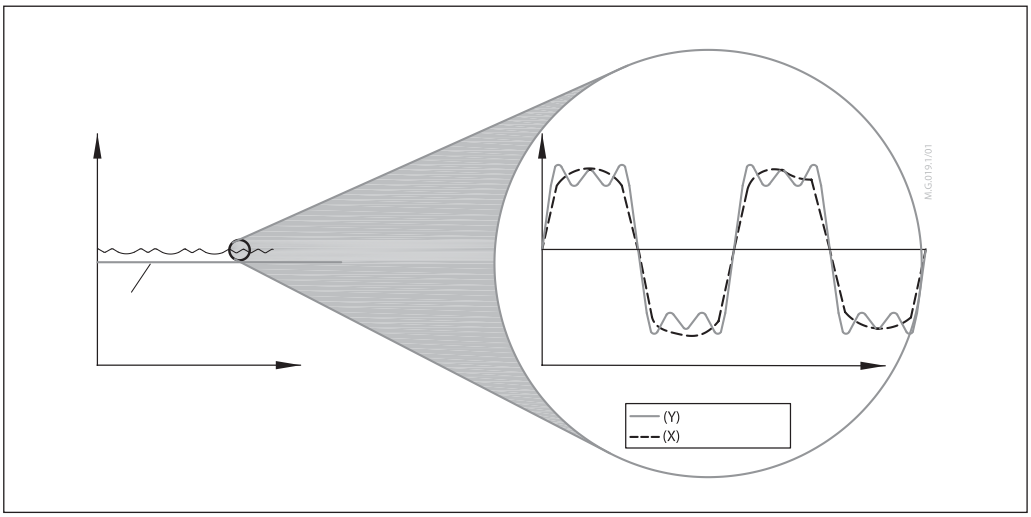

© Danfoss | 2022.07

Manual operation

Mechanical and electrical operation are not allowed to be used at the same time!

The actuators can be manually positioned when in Stand-By mode or when there is no power supply (mechanically).

Actuator type	Mechanical operation	Electrical operation
AME 655-1	✓	✓
AME 658 SU/SD-1	✓	✓
AME 685-1	✓	✓

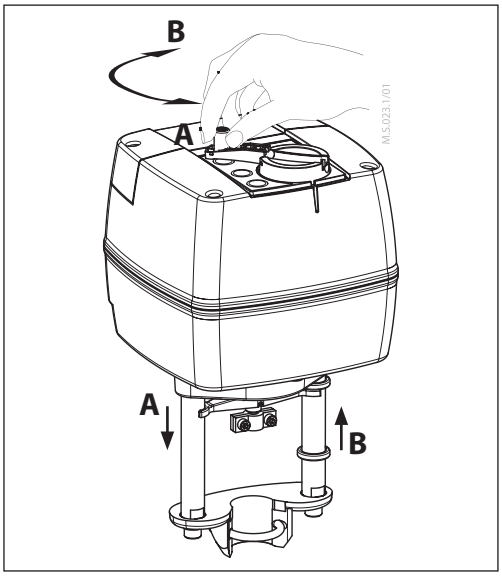

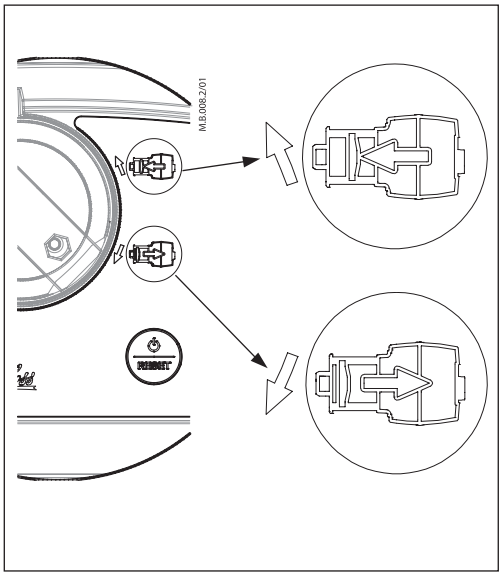

Mechanical manual operation
The actuators have a knob & crank on the top of the housing which enables manual positioning of the actuator.
Use Mechanical manual operation only when the power is disconnected.

Electrical manual operation
The actuators have two buttons on the top of the housing that are used for electrical manual positioning (up or down) if the actuator is in Stand-By mode. First press the RESET button until the actuator goes to Stand-By mode (red LED is lit). By pressing the upper button the stem will be extended and by pressing the lower button the stem will be retracted.

Dimensions

AME 655-1/AME 658 SU-1 & AME 658 SD-1

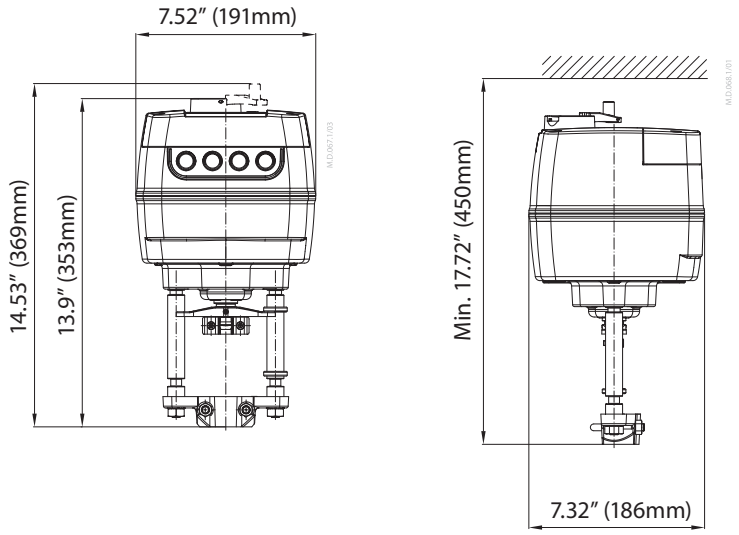

AME 685-1

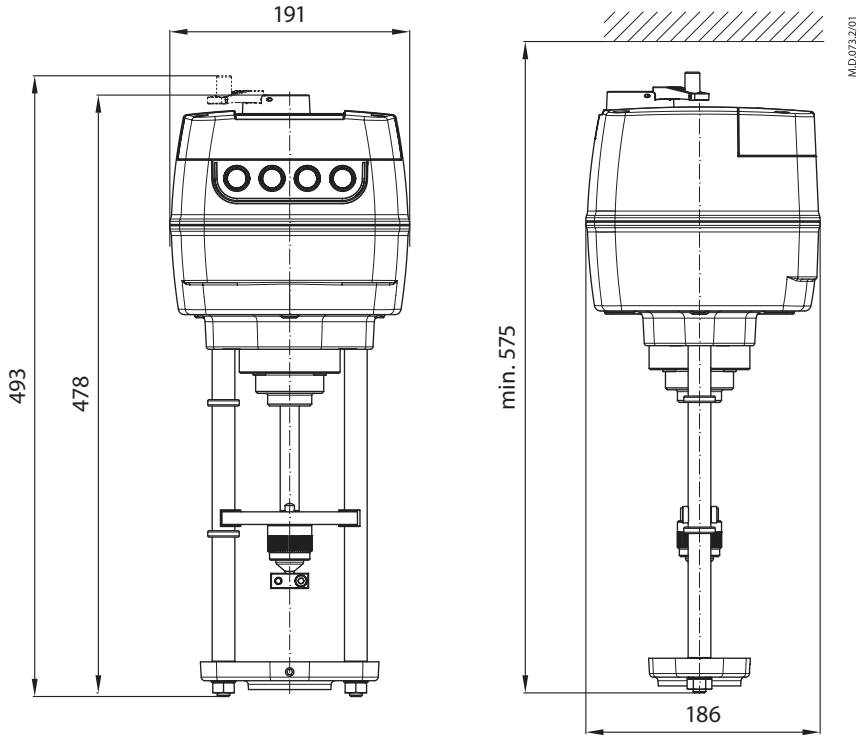

© Danfoss | 2022.07

Actuator – valve combinations

AME 655-1/AME 658 SU-1 & AME 658 SD-1

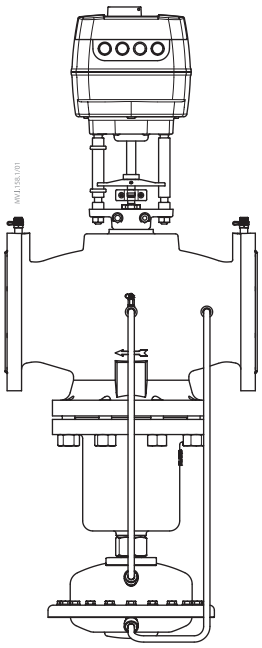

AME 65x + AB-QM 5"

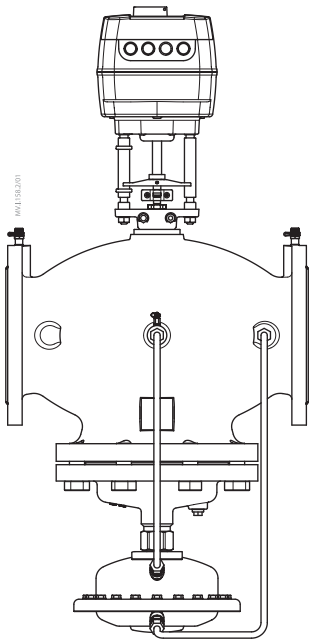

AME 65x + AB-QM 6"

AME 685-1

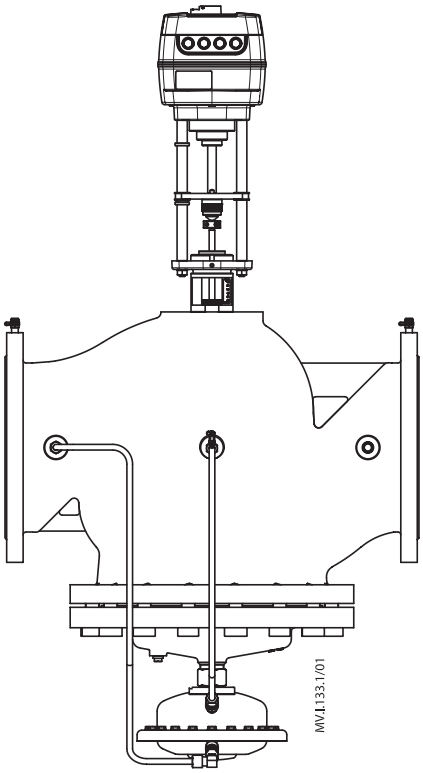

AME 685-1 + AB-QM 8", 10"

Danfoss A/S
Climate Solutions • danfoss.com • +45 7488 2222

Any information, including, but not limited to information on selection of product, its application or use, product design, weight, dimensions, capacity or any other technical data in product manuals, catalogues descriptions, advertisements, etc. and whether made available in writing, orally, electronically, online or via download, shall be considered informative, and is only binding if and to the extent, explicit reference is made in a quotation or order confirmation. Danfoss cannot accept any responsibility for possible errors in catalogues, brochures, videos and other material.
Danfoss reserves the right to alter its products without notice. This also applies to products ordered but not delivered provided that such alterations can be made without changes to form, fit or function of the product.
All trademarks in this material are property of Danfoss A/S or Danfoss group companies. Danfoss and the Danfoss logo are trademarks of Danfoss A/S. All rights reserved.