ENGINEERING
TOMORROW

Data sheet

NovoCon® S, M, L and XL Digital actuators

NovoCon® S

NovoCon® M

NovoCon® L

NovoCon® XL

Table of contents

Description ... 2
Ordering ... 4
Cross reference table AB-QM – Flow sensor - NovoCon® ... 6
Technical data ... 7
Design ... 9
Installation and orientation ... 10
Dip switches ... 11
DIP Switch Settings ... 11
DIP Switch Settings - Manual Addressing ... 12
Wiring ... 13
Wiring considerations ... 14
Daisy chain & Power booster ... 18
LED Display ... 22
Application principle ... 28
NovoCon® S I/O ... 28
NovoCon® I/O and Multiplexers/Relays ... 28
Central Plant Changeover – 2 pipe system ... 28
ChangeOver⁶ - 4 pipe system ... 29
ChangeOver⁶ Energy ... 29
Analog CO6 mode ... 29
ChangeOver⁶ ... 31
No mixing and shut off ... 32
Application mode ... 32
BACnet objects and Modbus registers usage ... 33
Design flow rate setting ... 33
Advanced configuration and features ... 34
Optimize BACnet network speed ... 35
Energy management ... 35
Power Manager ... 35
Delta T Manager ... 36
Commissioning/connection of flow sensor to: ... 38
NovoCon® S ... 38
NovoCon® M ... 39
NovoCon® L, XL ... 40
Auto baud rate ... 41
Auto MAC Addressing - BACnet only ... 41
BACnet Objects - Analog Value ... 42
BACnet Objects - Multi State Value ... 43
BACnet Objects - Binary Value ... 45
BACnet Objects- Device Object ... 45
BACnet Objects - Analog Input ... 46
BACnet Objects - Analog Output ... 46
BACnet Objects - Notification class ... 46
BACnet Objects - Averaging ... 46
BACnet BIBBs services ... 46
Modbus registers - Configuration ... 47
Modbus registers - Operating ... 50
Modbus registers - Information ... 51
Alarms & warning ... 52
Firmware update ... 52
Valve Type Selection ... 53
Temperature sensors ... 54
Tender text ... 54
Trouble shooting ... 56
Firmware update ... 56
BACnet data ... 56
Modbus RTU data ... 56
Manual operation ... 57
Dimensions ... 58

Description

NovoCon® S

NovoCon® S is a high accuracy multi-functional field bus actuator, specifically designed for use in combination with the Pressure Independent Control Valve type AB-QM in sizes from DN 10-32. The flow is modulated by the AB-QM pressure independent control valve to avoid overflow and reduced boiler and/or chiller efficiency.

The actuator with AB-QM is used to control water supply to fan coil units, chilled beams, induction units, small re-heaters, re-coolers, AHU's and other terminal units for zone control, in which heating/chilled water is the controlled medium. Due to its accuracy, remote functionality and flow indication features, this product facilitates an accelerated commissioning process, allows easy maintenance, improves indoor comfort, increases energy savings and allows for fair cost allocation of heat/cool energy.

The high position accuracy of the actuator, together with the pressure independent and linear characteristic of the AB-QM valve, allow NovoCon® S to be used as a flow indicator.
Setup of the actuator and valve parameters are made via fieldbus. Control is achieved via field bus or via analog inputs to NovoCon® S.

Typical applications are:
- Radiant ceiling panels, supplied by 4 pipes (Heating supply and return and cooling supply and return).
- Fan coil units, with single coils supplied by 4 pipes (Heating supply and return and cooling supply and return).

General features:
- Remote commissioning/Pre-set/Flush features
- Flow, power emission and energy indication
- High position resolution and accuracy
- Energy management algorithms
- 4/2-pipe changeover applications
- I/O applications
- LED bar displaying status and alarms
- No tools required for mounting
- Maintenance-free lifetime
- Self-positioning process
- Low-noise operation
- Plug-in halogen free cables
- Auto MAC addressing for BACnet
- Auto baud rate detection
- Intrinsic alarm reporting for BACnet
- Valve blockage alarm
- Broken wire detection on analog control and ground signal
- Choice of BACnet MS/TP or Modbus RTU in the same product
- Mis-wiring protection on any wire up to 30 V

Combined with the Actuator NovoCon® ChangeOver[6], NovoCon® S offers a unique solution in controlling both the AB-QM valve and a 6-port motorised ball valve that performs a diverting function between two water circuits in 4-pipe changeover systems.

This diverting function, primarily used for radiant panels, also allows the cooling and heating capacity of a fan coil unit to be increased for the same compact size compared to a double coil model where the heating and cooling water circuits each have their own coil.

The 6-port diverting valve and actuator work in combination with an AB-QM PIBCV valve and NovoCon® S bus actuator. The AB-QM balances the flow and the NovoCon® S bus actuator controls the flow. NovoCon® S also controls the 6-port diverting valve actuator which switches between heating and cooling. This unique functionality is characterized by the following:

- There is only one single field bus and power supply connection cable to the NovoCon® S actuator. This powers both the NovoCon® S and controls the 6-port actuator. Furthermore, there is feedback from the 6-port actuator to NovoCon® S.
- The NovoCon® S actuator automatically fault-detects, by means of comparing 0-10V control & feedback signals, if the 6-port actuator is in manual operation mode, removed from the valve or if the 6-port valve is blocked.
- The NovoCon® S actuator has two Design Flow Rate pre-settings: one for heating and another for cooling.
- The NovoCon® S actuator indicates power emission and logs energy consumption for heating and cooling energy based on flow, supply and return pipe temperature measurement.
- While in maintenance mode, the 6-port actuator is able to fully close the valve and prevent any leakage, thereby saving on stop valves.
- Logic contained within the NovoCon® S actuator, ensures that only one actuator in each pair (NovoCon® S and 6-port valve actuator) drives. This ensures that 2 actuators in the pair never drive at the same time. This reduces voltage booster demands in daisy chains.
- The NovoCon® S actuator detects if the 6-port actuator cable is disconnected. If this is the case an alarm is initiated.

Features CO6:
- NovoCon® S + ChangeOver[6] actuator represents only ONE device on the fieldbus network needing no physical I/O
- No cross-flow between heating and cooling
- Simple connection and control
- Feedback for position status and alarms
- Quiet and reliable operation
- Maintenance free
- Teflon seal and polished chrome valve ball to prevent valve sticking
- Blocked valve alarm
- Manual override

© Danfoss | 2023.01

Description *(continued)*

NovoCon® S *(continued)*

Features Energy:
- Supply and return temperature measurement
- Power emission indication reading
- Energy management functionality for both heating and cooling e.g. minimum delta T management
- Energy logging of both heating and cooling

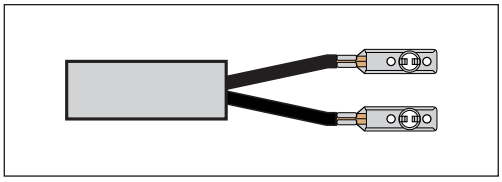

Features I/O:
- Connect to other devices and present them on the field bus, e.g. room thermostat, window contact, CO2 sensor, humidity sensors, fan control, 0-10V actuator etc.
- Select temperature units, Ohms or use as potential free contacts. Closed circuit <900Ω, open circuit 100kΩ.
- Available connections: 1 x analog output (V), 1 x analog input (V/mA) and 2 x resistance based inputs (°C/°F/Ohms)

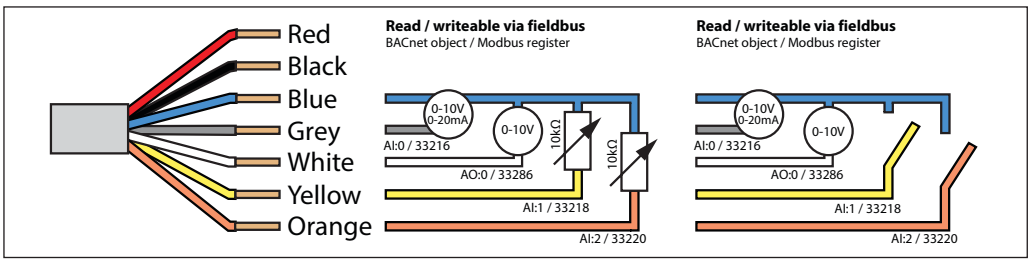

NovoCon® M

NovoCon® M is a high accuracy multi-functional fieldbus actuator, specifically designed for use in combination with the Pressure Independent Control Valve type AB-QM NovoCon® in sizes from DN 40-100 used in air handling units AHU, chillers and distribution station applications.
The high position accuracy of the actuator, together with the pressure independent and linear characteristic of the AB-QM valve, allow NovoCon® M to be used as a flow indicator.
Setup of the actuator and valve parameters are made via fieldbus. Control is achieved via fieldbus or via analog inputs to NovoCon® M.

General features:
- Remote commissioning/Pre-set/Flush features
- Flow, power emission and energy indication
- High position resolution and accuracy
- Energy management algorithms
- Inputs/Outputs
  - 3x Resistance Inputs (Pt1000, PT500, PT100, NTC 10k Type 2 & 3)
  - 1x Analog Input (0-10V or 0/4-20mA),
  - 1x Analog Output (0-10V)
- LED displaying status and alarms
- No tools required for mounting on valve
- Maintenance-free lifetime
- Low-noise operation
- Auto MAC addressing for BACnet
- Auto baud rate detection
- Intrinsic alarm reporting for BACnet
- Valve blockage alarm
- Choice of BACnet MS/TP or Modbus RTU in the same product
- Mis-wiring protection on any wire up to 30 V

NovoCon® L, XL

NovoCon® L/XL is a high accuracy multi-functional fieldbus actuator, specifically designed for use in combination with the Pressure Independent Control Valve type AB-QM in sizes from DN 125-250 used in air handling units AHU, chillers and distribution station applications.
The high position accuracy of the actuator, together with the pressure independent and linear characteristic of the AB-QM valve, allow NovoCon® L/XL to be used as a flow indicator.
Setup of the actuator and valve parameters are made via fieldbus. Control is achieved via fieldbus or via analog inputs to NovoCon® L/XL.

General features:
- Remote commissioning/Pre-set/Flush features
- Flow, power emission and energy indication
- High position resolution and accuracy
- Energy management algorithms
- Inputs/Outputs
  - 3x Resistance Inputs (Pt1000, PT500, PT100, NTC 10k Type 2 & 3)
  - 1x Analog Input (0-10V or 0/4-20mA),
  - 1x Analog Output (0-10V)
- LED displaying status and alarms
- Maintenance-free lifetime
- Low-noise operation
- Auto MAC addressing for BACnet
- Auto baud rate detection
- Intrinsic alarm reporting for BACnet
- Valve blockage alarm
- Choice of BACnet MS/TP or Modbus RTU in the same product
- Mis-wiring protection on any wire up to 30 V

Ordering

NovoCon® S

Type	Code No.
NovoCon® S	**003Z8504**

Accessories

Type	Length	Connections	Cable material	Code No.
Cable NovoCon® Digital	1.5 m	bus / power	Halogen free	**003Z8600**
Cable NovoCon® Digital	5 m	bus / power	Halogen free	**003Z8601**
Cable NovoCon® Digital	10 m	bus / power	Halogen free	**003Z8602**
Cable NovoCon® Digital, daisy chain	0.5 m	actuator / actuator	Halogen free	**003Z8609**
Cable NovoCon® Digital, daisy chain	1.5 m	actuator / actuator	Halogen free	**003Z8603**
Cable NovoCon® Digital, daisy chain	5 m	actuator / actuator	Halogen free	**003Z8604**
Cable NovoCon® Digital, daisy chain	10 m	actuator / actuator	Halogen free	**003Z8605**
Cable NovoCon® Analog	1.5 m	0-10 V / power / voltage booster	Halogen free	**003Z8606**
Cable NovoCon® Analog	5 m	0-10 V / power / voltage booster	Halogen free	**003Z8607**
Cable NovoCon® Analog	10 m	0-10 V / power / voltage booster	Halogen free	**003Z8608**
Cable NovoCon® I/O	1.5 m	actuator / free wires	Halogen free	**003Z8612**

Note! *Cables are not included with actuator and must be ordered separately.*

Cable NovoCon® Energy	1.5 m	Plug-in cable with Pt1000 surface temperature sensors	PVC	**003Z8610**
Cable NovoCon® Energy	1.5 m	Plug-in cable with Pt1000 Immersed /universal temperature sensors (Ø 5,8mm)	PVC	**003Z8611**
Cable NovoCon® Temperature I/O	1 m / Temp. sensor 1.5m	Plug-in cable with Pt1000 surface temperature sensors and free wires for input, output and power	Halogen free. Sensor cables PVC	**003Z8613**

Note! *If separate Pt1000 temperature sensors are needed, Danfoss has an array of Pt1000 sensors that can be used with NovoCon® S. See Danfoss Pt1000 sensors ESMT, ESM-10, ESM-11, ESMB-12, ESMC, ESMU and code no. 187F3418.*

ChangeOver6 actuators

Actuator NovoCon ChangeOver[6]	1 m	Plug-in	Halogen free	**003Z8520**
Actuator NovoCon ChangeOver[6] Energy	1 m Temp. sensor 1.5 m	Plug-in incl. Pt1000 surface temperature sensors	Halogen free Sensor cables PVC	**003Z8521**
Actuator NovoCon ChangeOver[6] Flexible	1.5 m	Actuator / open wires	Halogen free	**003Z8522**

Type	DN	Fire load class[1)]	Code No.
ChangeOver[6] insulation	15	B2	**003Z3159**

[1)] According to D/N 4102

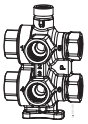

Type	DN	k_{vs} (m^3/h)	Connection	Code No.
ChangeOver[6] valve	15	2.4	Rp ½	**003Z3150**
	20	4.0	Rp ¾	**003Z3151**

Service kit - combination with old AB-QM

Type	Code No.
NovoCon® adapter for AB-QM, DN 10-32 (5 pcs.)	**003Z0239**

Accessories *(Cable NovoCon® Energy)*

Type	Designation	Code No.
Pockets for Cable NovoCon® Energy **(003Z8611)**	Immersion brass pockets, 40 mm, Ø 6.0 pair. For pipes DN25/32.	**087G6061**
	Immersion brass-pockets, 35 mm, Ø 5.2 pair, MID. For pipes DN15-32	**087G6053**

NovoCon® Configuration Tool

Type	Length	Connections	Cable material	Code No.
NovoCon® Configuration Tool cable	5 m	USB / actuator	Halogen free. USB Converter, PVC	**003Z8620**

Software available on www.novocon.com

Temperature sensors

Type	Code No.
Immersed Pt 1000 / f 5.2 mm / 1.5 m cable, pair, MID	**187F3418**

© Danfoss | 2023.01

Ordering *(continued)*

NovoCon® M

Actuator

Type	Supply voltage	Code No.
NovoCon® M	24V ac/dc	**003Z8540**

Temperature sensors

Type	Code No.
Immersed Pt 1000 / Ø 5.2 mm / 1.5 m cable, pair, MID	**187F3418**
Immersed Pt 1000 / Ø 5.2 mm / 3.0 m cable, pair, MID	**187F3419**

Accessories

Designation	Code No.
Immersion brass-pockets, 52 mm, Ø 5.2 pair, MID. For pipes DN40-65	**087G6054**
Immersion brass-pockets, 85 mm, Ø 5.2 pair, MID. For pipes DN80-125	**087G6055**

Valves

Type	Code No.
AB-QM NovoCon DN40 PN16 3TP	**003Z1770**
AB-QM NovoCon DN50 PN16 3TP	**003Z1771**
AB-QM NovoCon DN50 PN16 - Flange 3TP	**003Z1772**
AB-QM NovoCon DN65 PN16 3TP	**003Z1773**
AB-QM NovoCon DN65 PN16 3TP HF	**003Z1793**
AB-QM NovoCon DN80 PN16 3TP	**003Z1774**
AB-QM NovoCon DN80 PN16 3TP HF	**003Z1794**
AB-QM NovoCon DN100 PN16 3TP	**003Z1775**
AB-QM NovoCon DN100 PN16 3TP HF	**003Z1795**

Note: The above AB-QM NovoCon valves must be used with NovoCon® M.

NovoCon® Configuration Tool

Type	Length	Connections	Cable material	Code No.
NovoCon® Configuration Tool cable	5 m	USB / actuator	Halogen free. USB Converter, PVC	**003Z8620**

Software available on www.novocon.com

NovoCon® L, XL

Actuators

Picture	Type	Valve type	Code No.
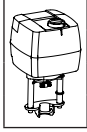	NovoCon® L	AB-QM DN125-150	**003Z8560**
	NovoCon® L SU	AB-QM DN125-150	**003Z8561**
	NovoCon® L SD	AB-QM DN125-150	**003Z8562**
	NovoCon® XL	AB-QM DN200-250	**003Z8563**

Accessories

Designation	Code No.
Immersion brass-pockets, 85 mm, Ø 5.2 pair, MID. For pipes DN80-125	**087G6055**
Immersion brass-pockets, 120 mm, Ø 5.2 pair, MID. For pipes DN150-200	**087G6056**
Immersion stainless steel-pockets, 155mm, Ø 5.2 pair, MID. For pipes DN250	**087G6059**

Temperature sensors

Type	Code No.
Immersed Pt 1000 / Ø 5.2 mm / 3.0 m cable, pair, MID	**187F3419**

NovoCon® Configuration Tool

Type	Length	Connections	Cable material	Code No.
NovoCon® Configuration Tool cable	5 m	USB / actuator	Halogen free. USB Converter, PVC	003Z8620

Software available on www.novocon.com

Cross reference table AB-QM – Flow sensor - NovoCon®:

Valve code	Valve name	Valve connection	Actuator code	Actuator name	Flow sensor code	Flow sensor name	Flow sensor connection	NovoCon S cable	Temperature sensor code (Pt1000)	Immersion pockets code
003Z8220	AB-QM 4.0 DN15 LF 0.2 m^3/h	thread	**003Z8504**	NovoCon S	**187F3771**	Sono S30 DN15 Qp 0.6 m^3/h	thread	**003Z8613***	/	/
								003Z8612	**187F3418**	**087G6053**
003Z8221	AB-QM 4.0 DN15 0.65 m^3/h	thread	**003Z8504**	NovoCon S	**187F3771**	Sono S30 DN15 Qp 0.6 m^3/h	thread	**003Z8613***	/	/
								003Z8612	**187F3418**	**087G6053**
003Z8222	AB-QM 4.0 DN15 HF 1.2 m^3/h	thread	**003Z8504**	NovoCon S	**187F3772**	Sono S30 DN15 Qp 1.5 m^3/h	thread	**003Z8613***	/	/
								003Z8612	**187F3418**	**087G6053**
003Z8223	AB-QM 4.0 DN20 1.1 m^3/h	thread	**003Z8504**	NovoCon S	**187F3772**	Sono S30 DN15 Qp 1.5 m^3/h	thread	**003Z8613***	/	/
								003Z8612	**187F3418**	**087G6053**
003Z8224	AB-QM 4.0 DN20 HF 1.9 m^3/h	thread	**003Z8504**	NovoCon S	**187F3772**	Sono S30 DN15 Qp 1.5 m^3/h	thread	**003Z8613***	/	/
								003Z8612	**187F3418**	**087G6053**
003Z8320	AB-QM 4.0 DN15 LF 0.2 m^3/h	int. thread	**003Z8504**	NovoCon S	**187F3771**	Sono S30 DN15 Qp 0.6 m^3/h	thread	**003Z8613***	/	/
								003Z8612	**187F3418**	**087G6053**
003Z8321	AB-QM 4.0 DN15 0.65 m^3/h	int. thread	**003Z8504**	NovoCon S	**187F3771**	Sono S30 DN15 Qp 0.6 m^3/h	thread	**003Z8613***	/	/
								003Z8612	**187F3418**	**087G6053**
003Z8322	AB-QM 4.0 DN15 HF 1.2 m^3/h	int. thread	**003Z8504**	NovoCon S	**187F3772**	Sono S30 DN15 Qp 1.5 m^3/h	thread	**003Z8613***	/	/
								003Z8612	**187F3418**	**087G6053**
003Z8323	AB-QM 4.0 DN20 1.1 m^3/h	int. thread	**003Z8504**	NovoCon S	**187F3772**	Sono S30 DN15 Qp 1.5 m^3/h	thread	**003Z8613***	/	/
								003Z8612	**187F3418**	**087G6053**
003Z8324	AB-QM 4.0 DN20 HF 1.9 m^3/h	int. thread	**003Z8504**	NovoCon S	**187F3772**	Sono S30 DN15 Qp 1.5 m^3/h	thread	**003Z8613***	/	/
								003Z8612	**187F3418**	**087G6053**
003Z8205	AB-QM 4.0 DN25 2.2 m^3/h	thread	**003Z8504**	NovoCon S	**187F3773**	Sono S30 DN20 Qp 2.5 m^3/h	thread	**003Z8613***	/	/
								003Z8612	**187F3418**	**087G6053**
003Z8206	AB-QM 4.0 DN25 HF 3.8 m^3/h	thread	**003Z8504**	NovoCon S	**187F3773**	Sono S30 DN20 Qp 2.5 m^3/h	thread	**003Z8613***	/	/
								003Z8612	**187F3418**	**087G6053**
003Z8207	AB-QM 4.0 DN32 3.6 m^3/h	thread	**003Z8504**	NovoCon S	**187F3774**	Sono S30 DN25 Qp 3.5 m^3/h	thread	**003Z8613***	/	/
								003Z8612	**187F3418**	**087G6053**
003Z8208	AB-QM 4.0 DN32 HF 5.0 m^3/h	thread	**003Z8504**	NovoCon S	**187F3775**	Sono S30 DN25 Qp 6.0 m^3/h	thread	**003Z8613***	/	/
								003Z8612	**187F3418**	**087G6053**
003Z1770	AB-QM NovoCon DN40 7.5 m^3/h	thread	**003Z8540**	NovoCon M	**187F3776**	Sono S30 DN40 Qp 10.0 m^3/h	thread	/	**187F3418**	**087G6054**
003Z1771	AB-QM NovoCon DN50 12.5 m^3/h	thread	**003Z8540**	NovoCon M	**187F3776**	Sono S30 DN40 Qp 10.0 m^3/h	thread	/	**187F3418**	**087G6054**
003Z1773	AB-QM NovoCon DN65 20.0 m^3/h	flange	**003Z8540**	NovoCon M	**187F3777**	Sono S30 DN50 Qp 15.0 m^3/h	flange	/	**187F3419**	**087G6054**
003Z1793	AB-QM NovoCon DN65 HF 25.0 m^3/h	flange	**003Z8540**	NovoCon M	**187F3778**	Sono S30 DN65 Qp 25.0 m^3/h	flange	/	**187F3419**	**087G6054**
003Z1774	AB-QM NovoCon DN80 28.0 m^3/h	flange	**003Z8540**	NovoCon M	**187F3778**	Sono S30 DN65 Qp 25.0 m^3/h	flange	/	**187F3419**	**087G6055**
003Z1794	AB-QM NovoCon DN80 HF 40.0 m^3/h	flange	**003Z8540**	NovoCon M	**187F3779**	Sono S30 DN80 Qp 40.0 m^3/h	flange	/	**187F3419**	**087G6055**
003Z1775	AB-QM NovoCon DN100 38.0 m^3/h	flange	**003Z8540**	NovoCon M	**187F3779**	Sono S30 DN80 Qp 40.0 m^3/h	flange	/	**187F3419**	**087G6055**
003Z1795	AB-QM NovoCon DN100 HF 59.0 m^3/h	flange	**003Z8540**	NovoCon M	**187F3780**	Sono S30 DN100 Qp 60.0 m^3/h	flange	/	**187F3419**	**087G6055**
003Z0705	AB-QM DN125 90.0 m^3/h	flange	**003Z8560**	NovoCon L	**187F3530**	SONO 3500 CT DN100 Qp 60.0 m^3/h	flange	/	**187F3419**	**087G6055**
003Z0715	AB-QM DN125 HF 110.0 m^3/h	flange	**003Z8560**	NovoCon L	**187F3530**	SONO 3500 CT DN100 Qp 60.0 m^3/h	flange	/	**187F3419**	**087G6055**
003Z0706	AB-QM DN150 150.0 m^3/h	flange	**003Z8560**	NovoCon L	**187F3531**	SONO 3500 CT DN125 Qp 100.0 m^3/h	flange	/	**187F3419**	**087G6056**
003Z0716	AB-QM DN150 HF 190.0 m^3/h	flange	**003Z8560**	NovoCon L	**187F3531**	SONO 3500 CT DN125 Qp 100.0 m^3/h	flange	/	**187F3419**	**087G6056**
003Z0707	AB-QM DN200 220.0 m^3/h	flange	**003Z8563**	NovoCon XL	**187F3531**	SONO 3500 CT DN125 Qp 100.0 m^3/h	flange	/	**187F3419**	**087G6056**
003Z0717	AB-QM DN200 HF 285.0 m^3/h	flange	**003Z8563**	NovoCon XL	**187F3532**	SONO 3500 CT DN150 Qp 150.0 m^3/h	flange	/	**187F3419**	**087G6056**
003Z0708	AB-QM DN250 300.0 m3/h	flange	**003Z8563**	NovoCon XL	**187F3532**	SONO 3500 CT DN150 Qp 150.0 m^3/h	flange	/	**187F3419**	**087G6059**
003Z0718	AB-QM DN250 HF 370.0 m3/h	flange	**003Z8563**	NovoCon XL	**187F3532**	SONO 3500 CT DN150 Qp 150.0 m^3/h	flange	/	**187F3419**	**087G6059**

** IO cable with surface sensor (Pt1000)*

© Danfoss | 2023.01

Technical data

NovoCon® S

Power supply range	24 V AC/DC, 50 / 60 Hz *
Power consumption	Operating: 2.7 VA@24VAC / 1.2 W@24VDC Standby: 1.8 VA@24VAC / 0.7 W@24VDC
Protection class	III safety extra-low voltage
Control signal NovoCon® S	BACnet MS/TP, Modbus RTU 0-10 VDC, 0-5 VDC, 2-10 VDC, 5-10 VDC, 2-6 VDC, 6-10 VDC, 0-20 mA, 4-20 mA
Impedance	R_{in} AI:0 >100 kΩ (V); 500 Ω (mA)
	R_{out} AO: 1500 Ω
Actuator speed selections (*open to close*)	3 sec/mm, 6 sec/mm, 12 sec/mm, 24 sec/mm, Constant Time
Stroke	7 mm
Force	90 N
Position accuracy	± 0.05 mm
Ambient temp. range	–10° C to 50° C
Ambient humidity	98% r.h., non-condensing *(according to EN 60730-1)*
Max. medium temp.	120° C
Storage temp. range	–40 to 70 °C
Grade of enclosure	IP 54 (IP 40 upside down)
Weight	0.4 kg

** NovoCon® S is designed to operate at power deviations up to ±25%.*

BACnet data

Type	Description
BACnet device profile	BACnet Application Specific Controller (B-ASC)
BACnet protocol	BACnet Master Slave / Token Passing (MS/TP)
BACnet baud rates supported	Auto baud rate detection* / 9600 bps / 19200 bps / 38400 bps / 56700 bps / 76800 bps / 115200bps

Modbus RTU data

Supported baud rates	Auto baud rate detection* / 9600 bps / 19200 bps / 38400 bps / 56700 bps / 76800 bps / 115200bps
Supported transmission modes	Parity: None (1-8-N-2) / Odd (1-8-O-1) / Even (1-8-E-1) / None (1-8-N-1) / Auto parity* Data format: Parity (Start bit - Data bits - Parity - Stop bits)

** Default*

NovoCon® M

Power supply		V	24 ±25% ac/dc
Power consumption	running	VA	<3.5@24Vac / <2.0@24Vdc
	standby	W	2.0 ac / 0.9 dc
Frequency		Hz	50/60±10%
Control signal		VDC	BACnet MS/TP, Modbus RTU, 0-10, 0-5, 2-10, 5-10, 2-6, 6-10
		mA	0-20, 4-20
Impedance			Rin 90kΩ (V). 500 Ω (mA)
			Rout 250Ω
Closing force		N	550
Max. stroke		mm	20
Position accuracy		mm	± 0.2
Actuator speed selections (open to close)		s/mm	3, 6, 12, 24, Constant Time
Max. medium temperature		°C	120
Ambient temperature		°C	–10 … 50
Storage and transport temperature		°C	–40 … 70
Ambient humidity			5-95% r.h., non-condensing (according to EN 60730-1)
Protection class			III
Grade of enclosure			IP 54
Weight		kg	0.5

Technical data *(continued)*

NovoCon® L, XL

Actuator type			NovoCon® L	NovoCon® L SD	NovoCon® L SU	NovoCon® XL
Power supply		V	24; +10 … −15 %; AC/DC			
Power consumption	Operating		9.6VA@24VAC / 7.2W@24VDC	14.4VA@24VAC / 12W@24VDC	14.4VA@24VAC / 12W@24VDC	13.9VA@24VAC / 10.8W@24VDC
	Standby		1.7VA@24VAC / 0.7W@24VDC			
Frequency		Hz	50/60			
Control signal		Vdc	BACnet MS/TP, Modbus RTU, 0-10, 0-5, 2-10, 5-10, 2-6, 6-10			
		mA	0-20, 4-20			
Impedance			Rin 90kΩ (V). 500 Ω (mA)			
			Rout 250Ω			
Position accuracy		mm	± 1			± 1.8
Actuator speed selections (open to close)		s/ mm	3, 6, 12, 24, Constant Time			
Max. medium temperature		°C	120			
Ambient temperature			–10 … 50			
Storage and transport temperature			–40 … 70 (above 50°C, less than 3 days)			
Ambient humidity			5-95% r.h., non-condensing (according to EN 60730-1)			
Closing force		N	2000			4000
Max. stroke		mm	50			80
Protection class			III			
Grade of enclosure			IP 54			
Weight		kg	5.4	9.6	8.9	6.3
Safety function			-	Yes		-
Safety function runtime / 32 mm stroke		s	-	120		-
Manual operation			Electrical and mechanical	Electrical and mechanical	Electrical and mechanical	Electrical and mechanical
Power failure response			Stem remains in last position	Safety function Down, pushes stem down	Safety function Open, pulls stem up	Stem remains in last position

© Danfoss | 2023.01

Design

NovoCon® S

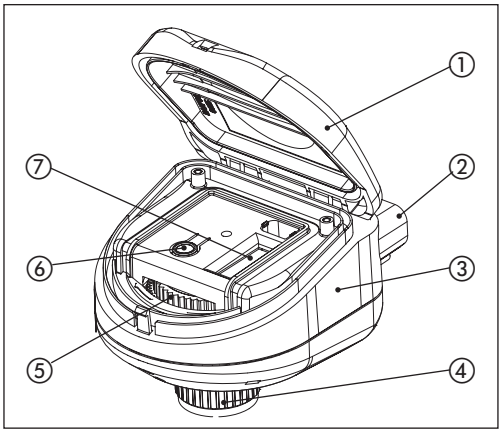

1. Removable lid
2. Bus and power connections
3. Status LED
4. Locking ring
5. Manual override
6. Reset button
7. DIP switches

NovoCon® M

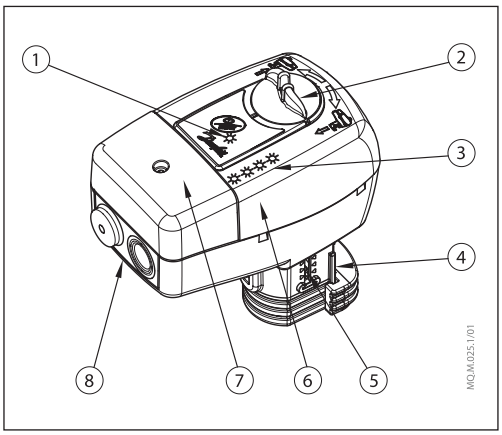

1. Communication LED
2. Manual operation knob
3. Buttons and status LED
4. Valve connector
5. Position indicator
6. DIP switches (under cover)
7. Service cover
8. Removable gland support

NovoCon® L, XL

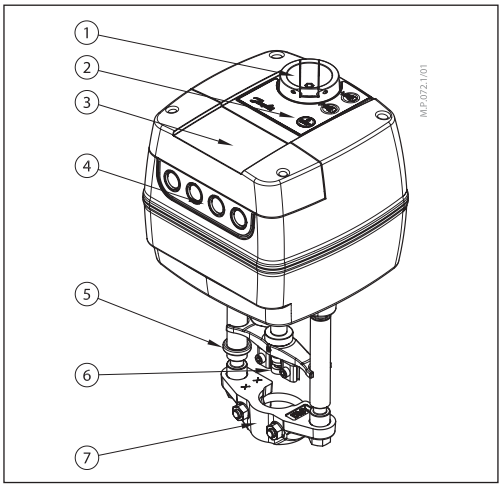

1. Manual operation knob
2. Buttons and status LED
3. Service cover
4. Removable gland support
5. End position indication ring
6. Stem connector
7. Valve connector

Installation and orientation

NovoCon® S

NovoCon® S can be mounted in any position. However, mounting orientation affects the IP classification. Using NovoCon® S upside down in cooling applications is not recommend due to non-resistance against liquid intrusion (only IP40 could be achieved). See illustration.

Note!
IP classification is only valid when cable or plugs are present in all connections.

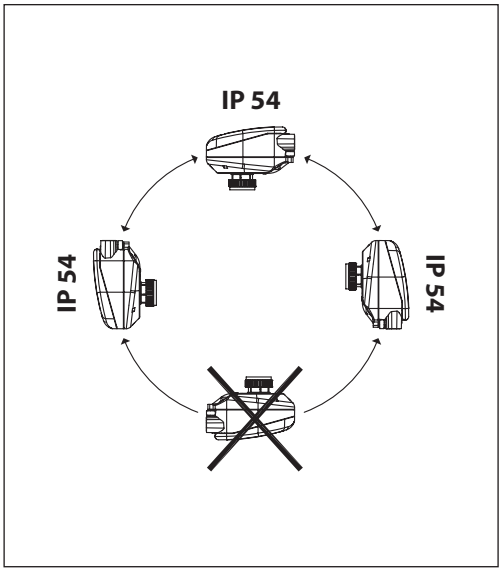

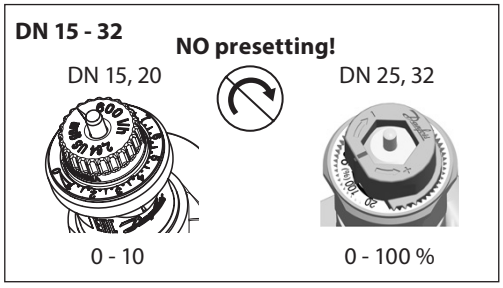

No presetting should be done on AB-QM valves. Valve must be set to full open (10 = AB-QM 4.0, 100% = AB-QM)

NovoCon® M

No tool is required to mount the actuator on the valve. Installation of the valve with the actuator is allowed in the horizontal position or upwards. Installation downwards is not allowed.
The actuator must not be installed in an explosive atmosphere, at ambient temperature lower than 0 °C or at ambient temperature higher than 50 °C. It must not be subject to steam jets, water jets or dripping liquid.

Note: The actuator may be rotated up to 360° with respect to the valve stem by loosening the retaining fixture. Once the actuator is in place, retighten the retaining fixture.

Note: The cable and cable gland/grommet used, must not compromise the actuator's IP rating. There must be no strain on the connectors. The rubber cable grommet delivered from factory do not compromise the IP rating but do not provide full strain relief according to the LVD directive.
Please observe local rules and regulations.

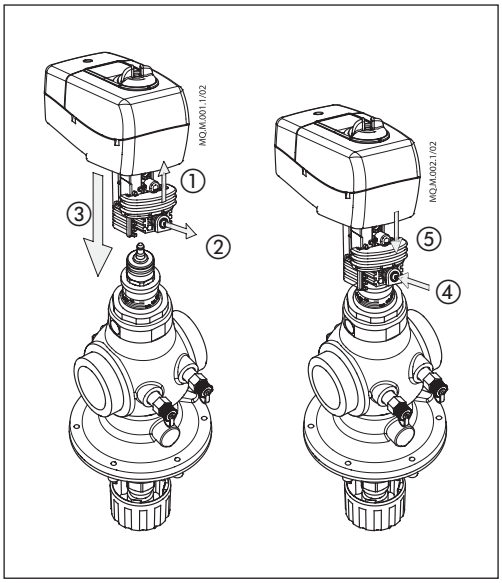

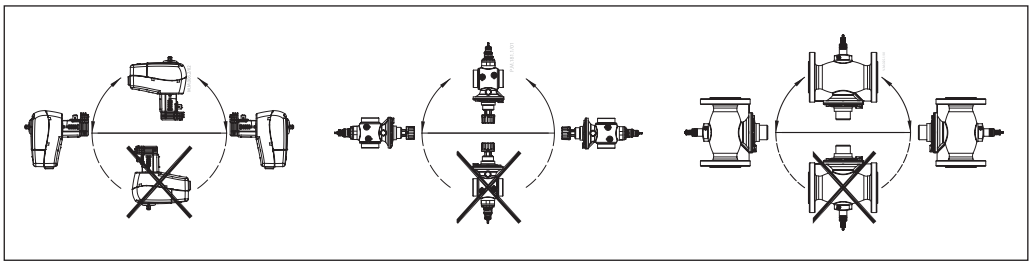

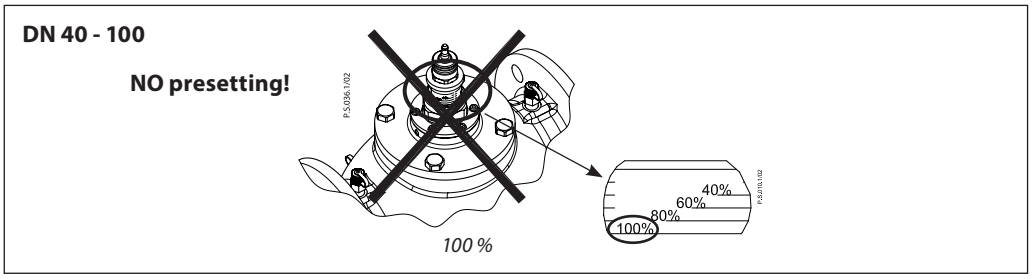

© Danfoss | 2023.01

Installation *(continued)*

NovoCon® L, XL

Mechanical

Please check the allowed installation positions for the valve and actuator. The actuator can be installed in all positions (*see below*).

Installation of the actuator assembly is certified for placement within the plenum airspace. Use a M8/SW13 key (not supplied) to fit the actuator to the valve body. Allow for necessary clearance for maintenance purposes. To link valve and actuator stems use a 4mm Allen key (not supplied). The actuator has position indication rings which should be pushed together before el. connection; after calibration cycle they indicate end positions of the stroke.

Electrical connection

Electrical connections can be accessed by removing the service cover.

NovoCon® L/XL

Four cable entries are provided
- (1) M16x1.5
- (2) M20x1.5
- (1) 1/2"

Note in order to maintain the enclosure's rating appropriate electrical conduit connectors must be installed.
Please observe local rules and regulations.

DN 125 - 250

NO presetting!

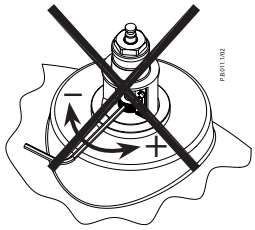

100 %

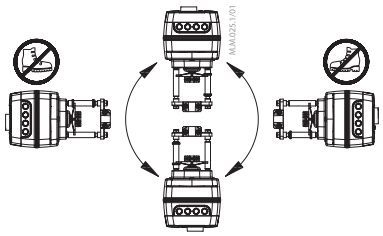

NovoCon® L

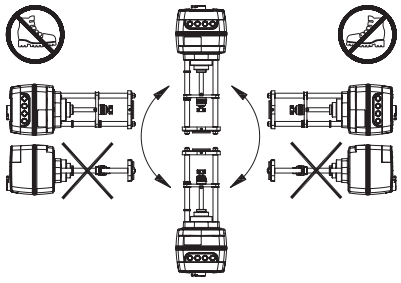

NovoCon® XL

Dip switches

The DIP switches located under the housing cover are for manual addressing.
The jumper next to the connectors is used for terminal resistor setting.

DIP Switch Settings

NovoCon® S, L, XL

BACnet: Auto MAC addressing is default. For manual MAC addressing, use DIP Switches.
Modbus: Manual MAC addressing is default. Automatic addressing is not available for Modbus. However, if an address has been assigned in BACnet before switching to Modbus, the address will also be used in Modbus if the DIP switches are left in the default positions.

DIP Switch	Configuration name	OFF state (default)	ON state
1. 1 2 3 4 5 6 7 8 9 10 ON OFF	BACnet address / Modbus unit ID bit 0	Logic '0'	Logic '1'
2. 1 2 3 4 5 6 7 8 9 10 ON OFF	BACnet address / Modbus unit ID bit 1	Logic '0'	Logic '1'
3. 1 2 3 4 5 6 7 8 9 10 ON OFF	BACnet address / Modbus unit ID bit 2	Logic '0'	Logic '1'
4. 1 2 3 4 5 6 7 8 9 10 ON OFF	BACnet address / Modbus unit ID bit 3	Logic '0'	Logic '1'
5. 1 2 3 4 5 6 7 8 9 10 ON OFF	BACnet address / Modbus unit ID bit 4	Logic '0'	Logic '1'
6. 1 2 3 4 5 6 7 8 9 10 ON OFF	BACnet address / Modbus unit ID bit 5	Logic '0'	Logic '1'
7. 1 2 3 4 5 6 7 8 9 10 ON OFF	BACnet address / Modbus unit ID bit 6	Logic '0'	Logic '1'
8. 1 2 3 4 5 6 7 8 9 10 ON OFF	Termination resistor (120Ω)	No termination	Termination resistor enabled [1]
9. 1 2 3 4 5 6 7 8 9 10 ON OFF	Not used		
10. 1 2 3 4 5 6 7 8 9 10 ON OFF	-	BACnet MS/TP [2]	Modbus RTU [2]

[1] The actuator possesses a resistor, DIP switch no. 8, that can be activated in the last actuator on the bus for correct termination of the bus.
[2] When the protocol is changed on DIP switch no. 10, a power cycle is required to make the actuator adopt the newly selected protocol.

DIP Switch Settings
(continued)

NovoCon® M

BACnet: Auto MAC addressing is default. For manual MAC addressing, use DIP switches
Modbus: Manual MAC addressing is default. Automatic addressing is not available for Modbus. However, if an address has been assigned in BACnet before switching to Modbus, the address will also be used in Modbus if the DIP switches are left in the default positions.

DIP Switch	Configuration name	OFF state (default)	ON state
1.	BACnet address / Modbus unit ID bit 0	Logic '0'	Logic '1'
2.	BACnet address / Modbus unit ID bit 1	Logic '0'	Logic '1'
3.	BACnet address / Modbus unit ID bit 2	Logic '0'	Logic '1'
4.	BACnet address / Modbus unit ID bit 3	Logic '0'	Logic '1'
5.	BACnet address / Modbus unit ID bit 4	Logic '0'	Logic '1'
6.	BACnet address / Modbus unit ID bit 5	Logic '0'	Logic '1'
7.	BACnet address / Modbus unit ID bit 6	Logic '0'	Logic '1'
8.	-	BACnet MS/TP [2]	Modbus RTU [2]
R.	Termination resistor (120Ω)	*No termination*	Termination resistor enabled [1]

[1] The actuator possesses a resistor, located between the connectors, DIP switch no. 9 R on/off, that can be activated in the last actuator on the bus for correct termination of the bus.
[2] When the protocol is changed on DIP switch no. 8, a power cycle is required to make the actuator adopt the newly selected protocol.

DIP Switch Settings - Manual Addressing

BACnet MAC address/Modbus Slave ID is set by DIP switch 1 to 7.
0 = OFF, 1 = ON

DIP switch 1, 2, 3, 4																DIP switch 5,6,7
0000	**1000**	**0100**	**1100**	**0010**	**1010**	**0110**	**1110**	**0001**	**1001**	**0101**	**1101**	**0011**	**1011**	**0111**	**1111**	
0*	1	2	3	4	5	6	7	8	9	10	11	12	13	14	15	**000**
16	17	18	19	20	21	22	23	24	25	26	27	28	29	30	31	**100**
32	33	34	35	36	37	38	39	40	41	42	43	44	45	46	47	**010**
48	49	50	51	52	53	54	55	56	57	58	59	60	61	62	63	**110**
64	65	66	67	68	69	70	71	72	73	74	75	76	77	78	79	**001**
80	81	82	83	84	85	86	87	88	89	90	91	92	93	94	95	**101**
96	97	98	99	100	101	102	103	104	105	106	107	108	109	110	111	**011**
112	113	114	115	116	117	118	119	120	121	122	123	124	125	126	127*	**111**

** Addresses no. 0 and 127 must not be used.*

Example

Setting MAC address to 37:

DIP 1	DIP 2	DIP 3	DIP 4	DIP 5	DIP 6	DIP 7
ON	OFF	ON	OFF	OFF	ON	OFF

© Danfoss | 2023.01

Wiring

NovoCon® S

The wiring of BACnet MS/TP or Modbus RTU (*RS485*) must be carried out in accordance with applicable standard ANSI/TIA/EIA-485-A-1998.
Galvanic separation shall be provided for segments crossing buildings.
Common ground shall be used for all devices on the same network inclusive router, gateways etc.

All bus connections in the cables are made with twisted wires.

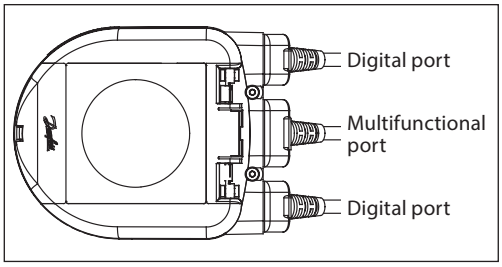

The cable type used for NovoCon® analog, digital and I/O cables is AWG22/0.32mm².
If other cables are used to extend the length, always use twisted pair wire for bus signal and include ground for the bus signal. The recommended cable type is AWG22/0.32 mm². If used for longer distances please use a AWG20/0.5mm² or AWG18/0.75mm² cable. The cable's impedance characteristic shall be between 100-130Ω. The capacitance between conductors shall be less than 100 pf per meter. The length of the cables influence on the communication speed. Longer cable lengths should result in lower baud rates. The total maximum cable length allowed per network is 1200m.
Use a minimum 20 cm distance between 110V/230V/400V power line cables and bus cables.
NovoCon® S has mis-wiring protection on up to 30 V AC/DC on all wires, but be aware that if 30V AC are connected to the Analog input, the external power supply will see this as a short circuit and blow the fuse in the external power supply.

NovoCon® digital daisy chain cable

The digital daisy chain cable is used to connect power and BACnet/Modbus between two NovoCon® S devices.

NovoCon® digital cable

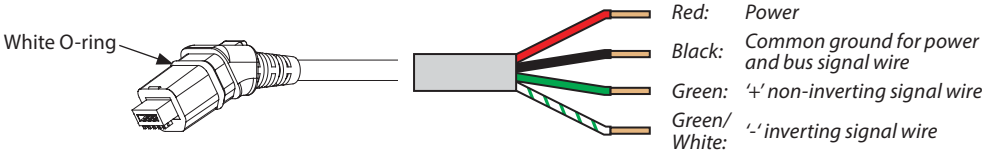

The digital cable is used to connect NovoCon® to other BACnet/Modbus devices. It is also used to connect NovoCon to a longer length of power/communication cable other than standard sales codes.

NovoCon® analog cable

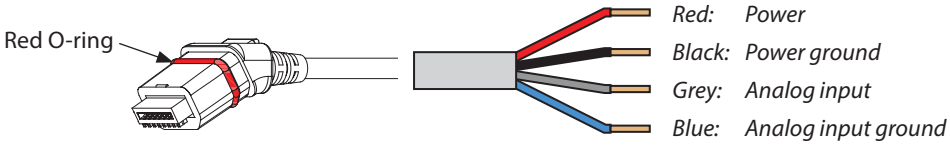

The analog cable is used to connect power and analog control signal.
The analog cable can also be used as a voltage booster for NovoCon® S on the network.

Cable NovoCon® Energy with Pt1000 surface sensor

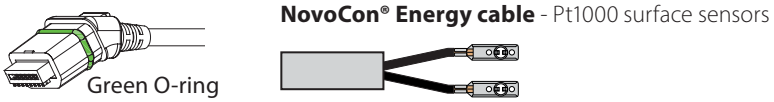

Wiring *(continued)*

NovoCon® S *(continued)*

Cable NovoCon® Energy with universal Pt1000 temperature sensor

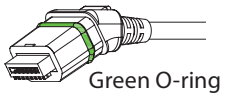

NovoCon® Energy cable - Pt1000 immersed sensors

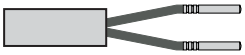

Cable NovoCon® I/O

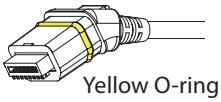

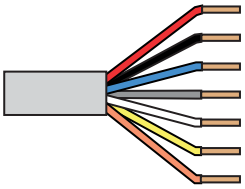

Red	Power 24V (in/out)
Black	Power ground (in/out)
Blue	Ground T1, T2, V/mA input & V output signal
Grey	V/mA input signal
White	V output signal
Yellow	T1 or resistance input
Orange	T2 or resistance input

The red and black wires can be used to boost the power on the line. They may also be used to power external devices, a separate calculation must be made for available power.

To avoid electrical short-circuiting, ensure that loose cable-ends have been **connected or isolated** before inserting the plug-in connector to the NovoCon® S actuator.

Cable NovoCon® Temperature I/O

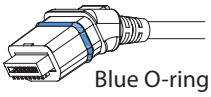

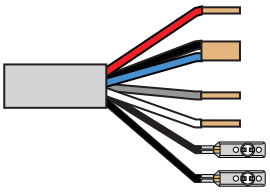

Red	Power 24V (in/out)
Black	Power ground (in/out)
Blue	Ground T1, T2, V/mA input & V output signal
Grey	V/mA input signal
White	V output signal

Wiring considerations

NovoCon® S

The important factors here are:
- Common ground
- 24VDC power supply is recommended
- In case more 24VAC power supplies are used always separate the 24VAC power supplies if different types of power supplies are used and / or different phases are used.

Wiring with DC power supply: *(recommended solution)*

Digital application – 24V DC – PSU with power sharing capability, both on the same or different phases.

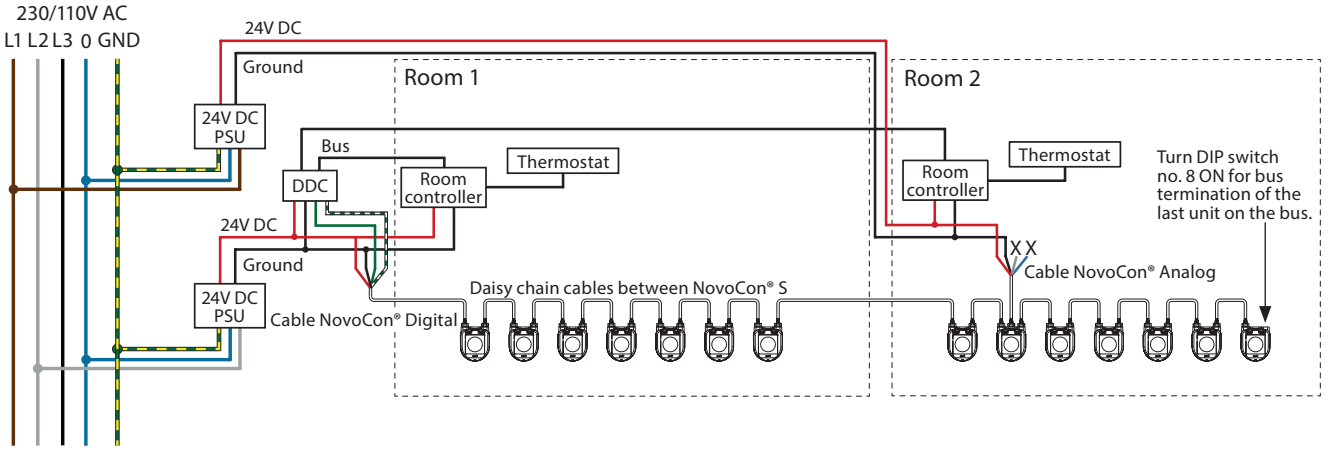

© Danfoss | 2023.01

Wiring with DC or AC power supply:

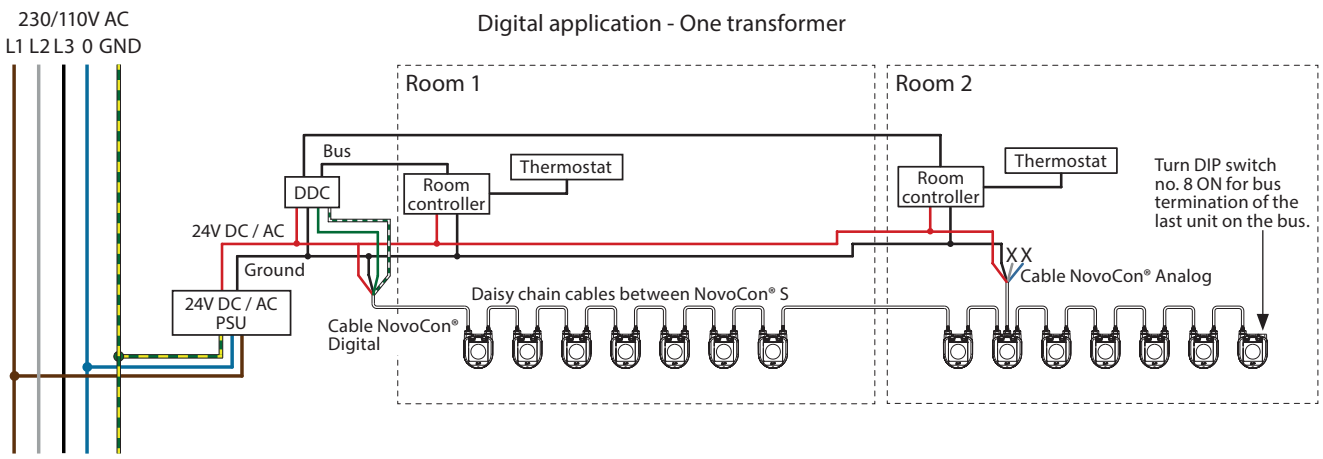

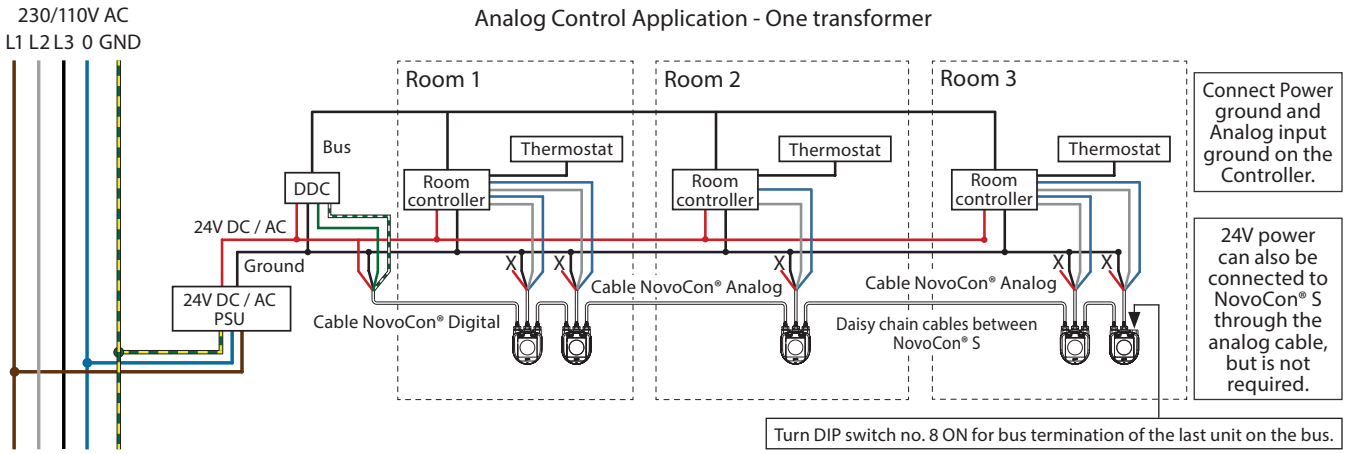

Wiring with AC power supplies:

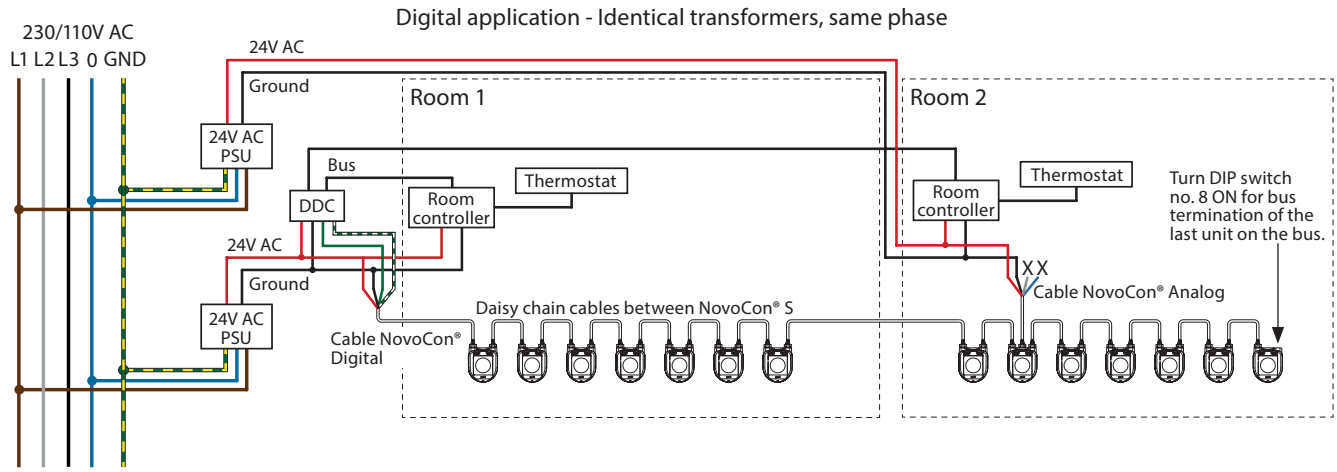

If the NovoCon® S network is supplied with two or more AC power boosters, caution must be observed when disconnecting one of the transformers from the high voltage power line. As the NovoCons are connected in a daisy chain, there may be high voltage on the primary side of the disconnected power supply. Disconnect always both the primary and secondary side of the transformer.

The power boosters must be protected against overload, otherwise the power booster may be damage if one of the other power boosters in the network is disconnected.

Wires that ends in an "X" must be properly terminated.

Wiring with AC power supply: *(continued)*

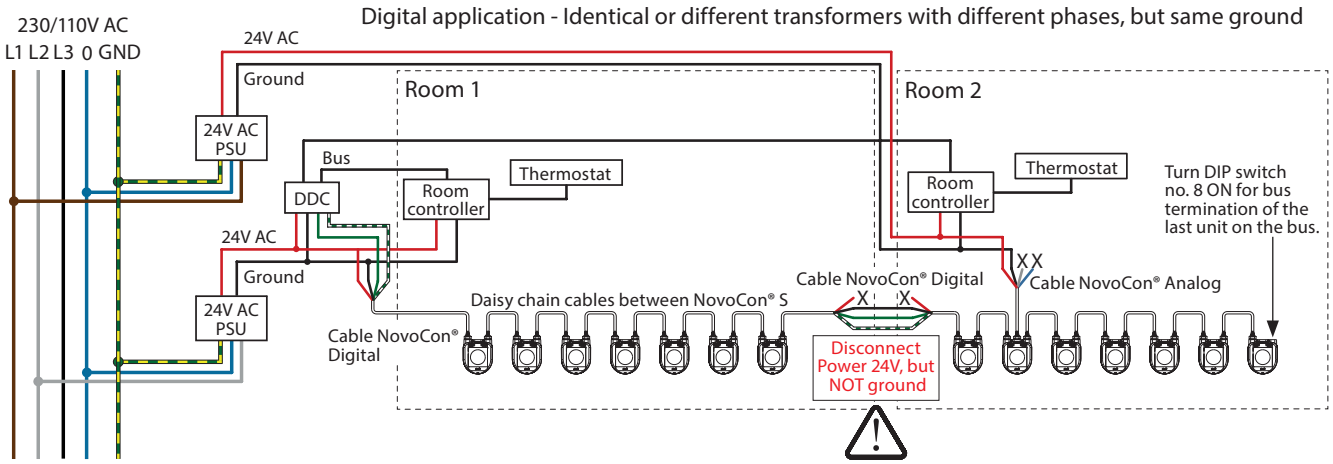

Wires that ends in an "X" must be properly terminated.

NovoCon® S ChangeOver⁶ application

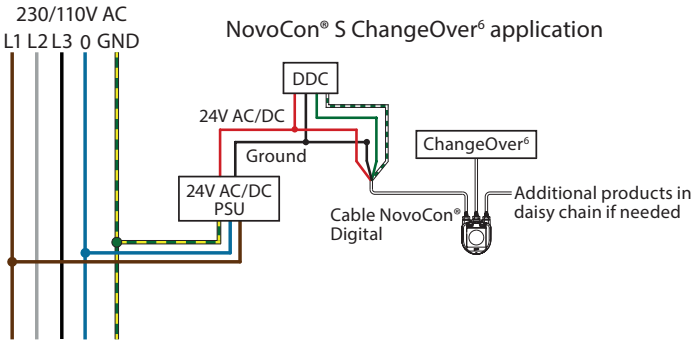

Wiring Analog CO6 mode

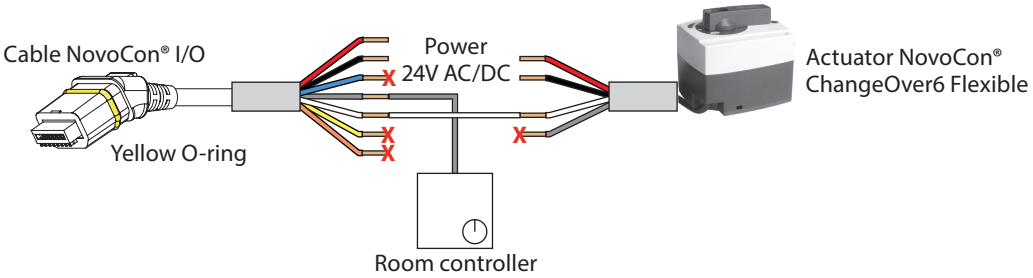

Wiring I/O application

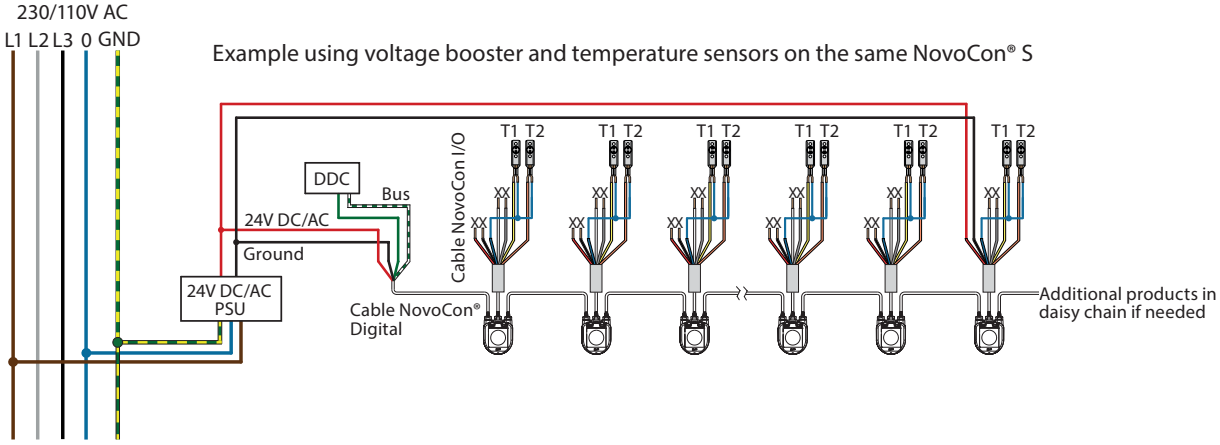

© Danfoss | 2023.01

Wiring *(continued)*

NovoCon® M

The wiring of BACnet MS/TP or Modbus RTU (RS485) must be carried out in accordance with applicable standard ANSI/TIA/EIA-485-A-1998. Galvanic separation shall be provided for segments crossing buildings. The bus connection 'A+' is the non-inverting signal and 'B-' is the inverting signal wire.

Common ground shall be used for all devices on the same network including routers gateways etc. The recommended cable type is AWG22/0.32 mm^2 twisted pair. If used for longer distances, please use a AWG20/0.5mm^2 or AWG18/0.75 mm^2 cable. The cable's impedance characteristic shall be between 100-130 Ω. The capacitance between conductors shall be less than 100 pf per meter. The length of the cables influence the communication speed. Longer cable lengths should result in lower baud rates. The total maximum cable length allowed per network is 1200 m.

Use a minimum 20 cm separation distance between 110V/230V/400V power line cables and bus cables. NovoCon® M has mis-wiring protection up to 30V AC/DC on all wires but be aware that if 30V AC are connected to the Analog input, the external power supply will see this as a short circuit and blow the fuse in the external power supply.

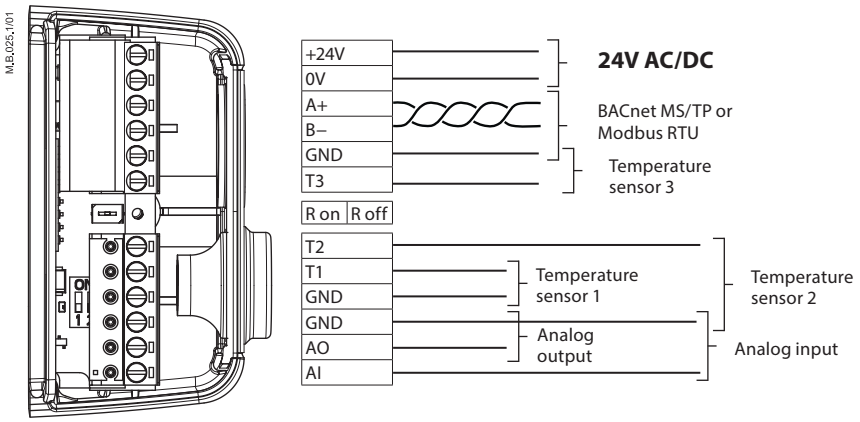

GND is common for all signals

Danfoss recommends that NovoCon® M should be used on its own sub-network for optimal performance.

General requirements and recommendations:
- Use the termination resistor (between the 2 connectors) at the end of each daisy chain.
- Generally, one power supply is preferred.
- If two power supplies are used, they must have the same polarity and the same common ground.
- A common ground must be used for all devices on the same sub-network, including routers and gateways.
- Galvanic separation shall be provided for segments crossing buildings.
- Total maximum sub-network cable length is 1200m.

NovoCon® L, XL

The wiring of BACnet MS/TP or Modbus RTU (RS485) must be carried out in accordance with applicable standard ANSI/TIA/EIA-485-A-1998. The bus connection 'A+' is the non-inverting signal and 'B-' is the inverting signal wire.

NovoCon® L/XL has a galvanic separated power supply, but common ground is recommended to use for all devices on the same network including routers gateways etc.
The cable's impedance characteristic for communication shall be between 100-130 Ω. The capacitance between conductors shall be less than 100 pf per meter. The length of the cables influence the communication speed. Longer cable lengths should result in lower baud rates. The total maximum cable length allowed per network is 1200 m.

Use a minimum 20 cm separation distance between 110V/230V/400V power line cables and bus cables. NovoCon® L/XL has mis-wiring protection up to 30V ac/dc on all wires but be aware that if 30V ac are connected to the Analog input, the external power supply will see this as a short circuit and blow the fuse in the external power supply.

Wiring *(continued)*

NovoCon® L, XL *(continued)*

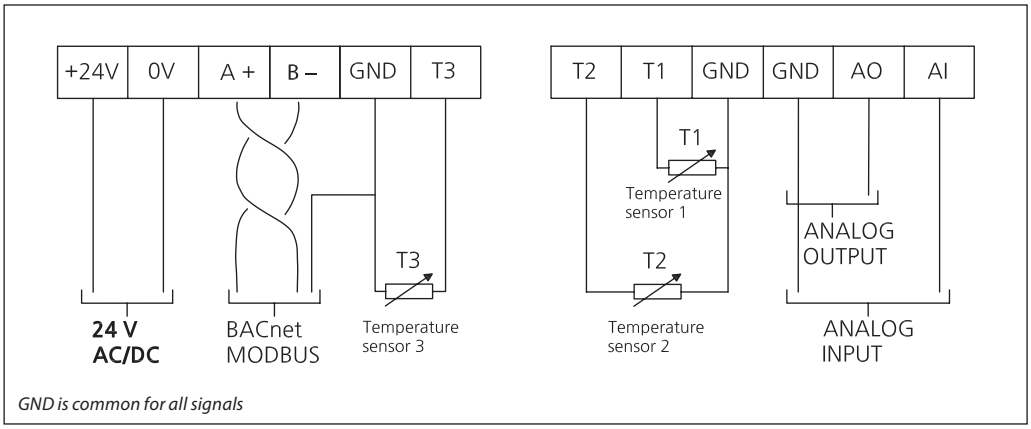

Danfoss recommends that NovoCon® L/XL should be used on its own sub-network for optimal performance.

General requirements and recommendations:
- Use the termination resistor (DIP switch 8) at the end of each daisy chain.
- Total maximum sub-network cable length is 1200m.

Daisy chain & Power booster

T-junctions
T-junction connections (stub lines) are not recommended.
In the event of T-Junction connections being used the following limitations must be adhered to:
- max T-junction cable length 1.5m (shortest standard digital cable)
- total length of Network max 640m (+ 100m stub length)
- max baud rate 76 kb/s [1)]
- max number of devices on network 64 [1)]
- main cable should be standard RS485 bus, twisted pair, min thickness AWG22 / 0.32mm^2.

[1)] When using less than 32 devices you may attempt to raise the speed to 115 kb/s.

Star topology
Star topology is not according to the RS485 standard and should not be used with NovoCon® S, M and L/XL.

NovoCon® S

DC Power supply (recommended)
When daisy chaining with 10m NovoCon® cables and using a 24V DC power supply, additional voltage boosters/power supply is needed when 12 NovoCons in series is exceeded. See table below.

AC Power supply
When daisy chaining with 10m NovoCon® cables and using a 24V AC power supply, additional voltage boosters/power supply is needed when 7 NovoCons in series is exceeded. *See table below.*
Important: The power supply used must be able to deliver 60% more power than the nominal rating of NovoCon® S.

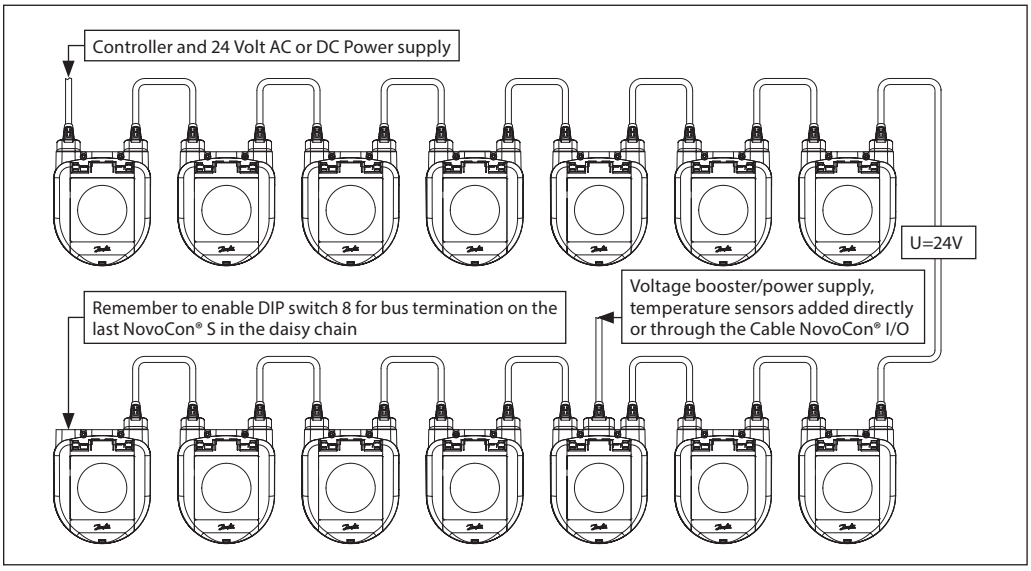

© Danfoss | 2023.01

Daisy chain & Power booster *(continued)*

NovoCon® S *(continued)*

When all devices on the sub-network are NovoCon® S, refer to the examples below for guidance.

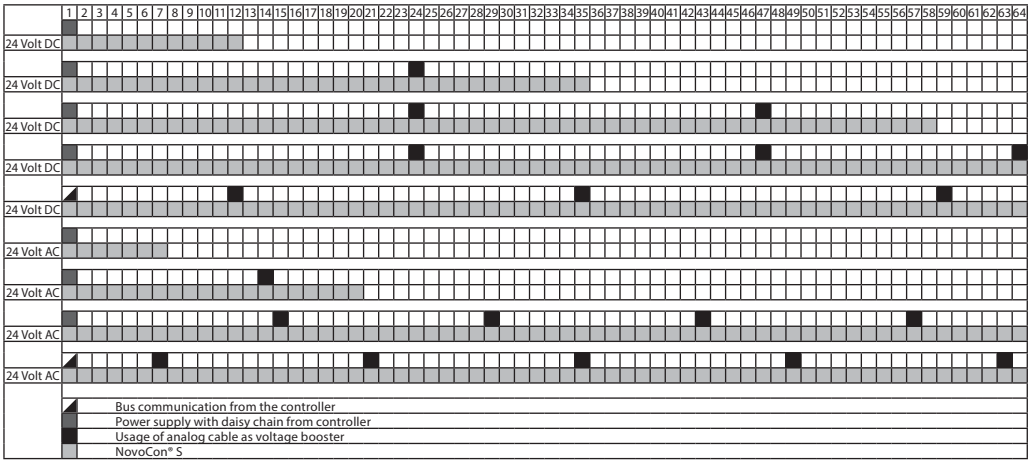

If NovoCon® S is used to power external devices, a separate calculation must be made for power booster amount and location.

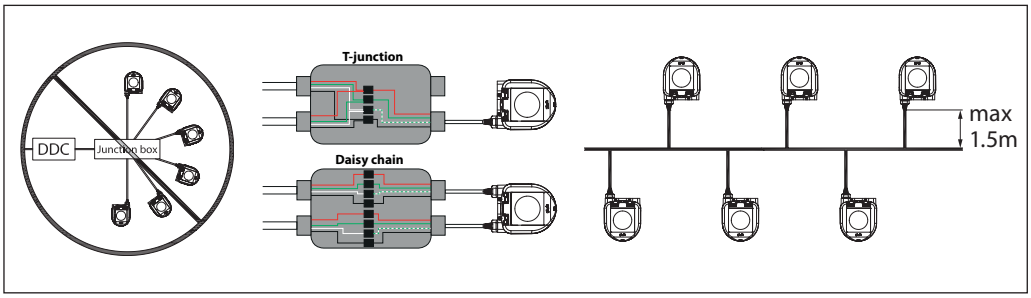

If the supply voltage to the first device in the daisy chain is lower than 24V AC/DC, or long thin cables other than NovoCon® cables are used, then the quantity of devices in the daisy chain may have to be reduced.

The recommended maximum quantities of NovoCon® S are 64 pcs in one daisy chain connection. If other BACnet devices are added with NovoCon® S in the same daisy chain connection, Danfoss recommends a maximum of 32 pcs. to ensure sufficient network speed.

Danfoss recommends that NovoCon® S should be used on its own sub-network for optimal performance.

General requirements and recommendations:

- Use Danfoss daisy chain cable to connect two NovoCon® S devices.
- Use Danfoss digital cable to connect NovoCon® S with another BACnet device.
- The current in cables should not exceed 3Arms at 30°C.
- Use the termination resistor (DIP switch 8) at the end of daisy chain.
- Voltage boosting may be achieved via any port.
- Generally, one power supply is preferred.
- If two power supplies are used, they must have the same polarity and the same common ground.
- A common ground must be used for all devices on the same sub-network, including routers and gateways.
- Galvanic separation shall be provided for segments crossing buildings.
- Total maximum sub-network cable length is 1200m.

Daisy chain & Power booster
(continued)

NovoCon® M

DC Power supply (recommended)
When daisy chaining with 10m AWG20/0,5 mm² twisted pair cable and using a 24V DC power supply, additional voltage boosters/power supply is needed when 12 NovoCons in series is exceeded.

AC Power supply
When daisy chaining with AWG20/0,5 mm² twisted pair cable and using a 24V AC power supply, additional voltage boosters/power supply is needed when 7 NovoCons in series is exceeded.
Important: The power supply used must be able to deliver 60% more power than the nominal rating of NovoCon® M.

Please secure:
- Common ground
- 24VDC power supply is recommended
- In case more 24VAC power supplies are used always separate the 24VAC power supplies if different types of power supplies are used and / or different phases are used.

NovoCon® M in daisy chain

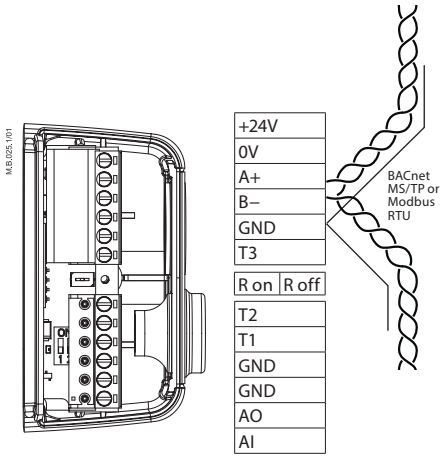

NovoCon® M in daisy chain with NovoCon® S

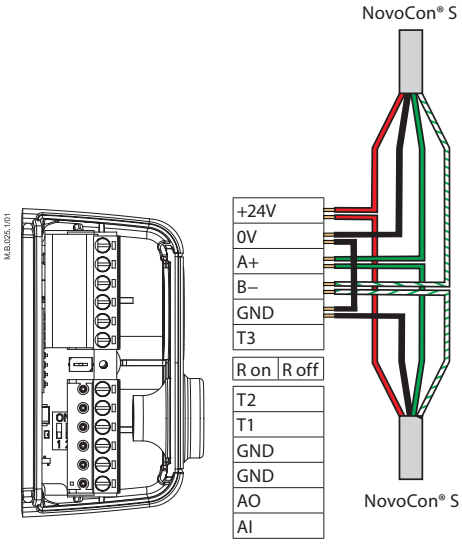

GND is common for all signals

If the NovoCon® M network is supplied with two or more AC power boosters, caution must be observed when disconnecting one of the transformers from the high voltage power line. As the NovoCons are connected in a daisy chain, there may be high voltage on the primary side of the disconnected power supply. Disconnect always both the primary and secondary side of the transformer.
The power boosters must be protected against overload, otherwise the power booster may be damage if one of the other power boosters in the network is disconnected.

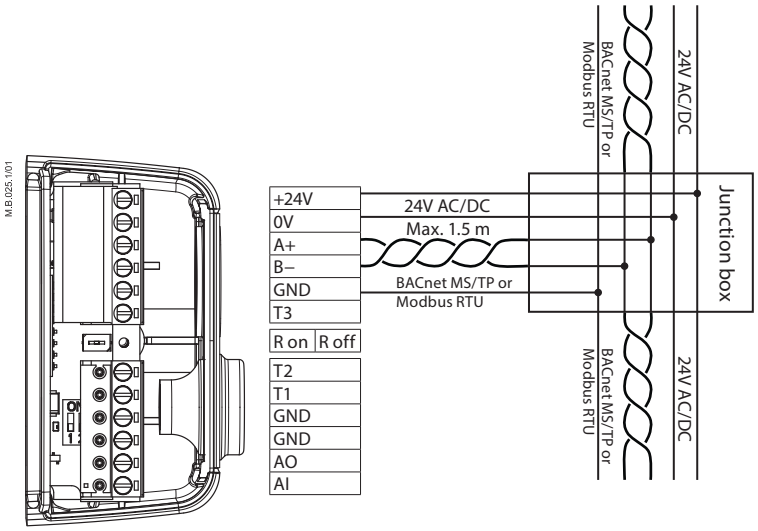

GND is common for all signals

© Danfoss | 2023.01

Daisy chain & Power booster
(continued)

NovoCon® L, XL

AC Power supply
Important: The power supply used must be able to deliver 60% more power than the nominal rating of NovoCon® L/XL.

Please secure:
- In case more 24V ac power supplies are used always separate the 24V ac power supplies if different types of power supplies are used and / or different phases are used.

NovoCon® L/XL in daisy chain

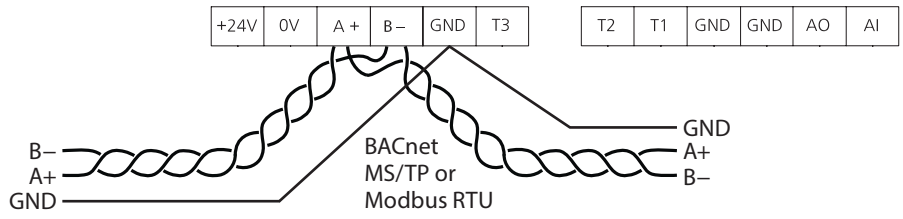

GND is common for all signals

If the NovoCon® L/XL network is supplied with two or more AC power boosters, caution must be observed when disconnecting one of the transformers from the high voltage power line. As the NovoCons are connected in a daisy chain, there may be high voltage on the primary side of the disconnected power supply. Disconnect always both the primary and secondary side of the transformer.
The power boosters must be protected against overload, otherwise the power booster may be damage if one of the other power boosters in the network is disconnected.

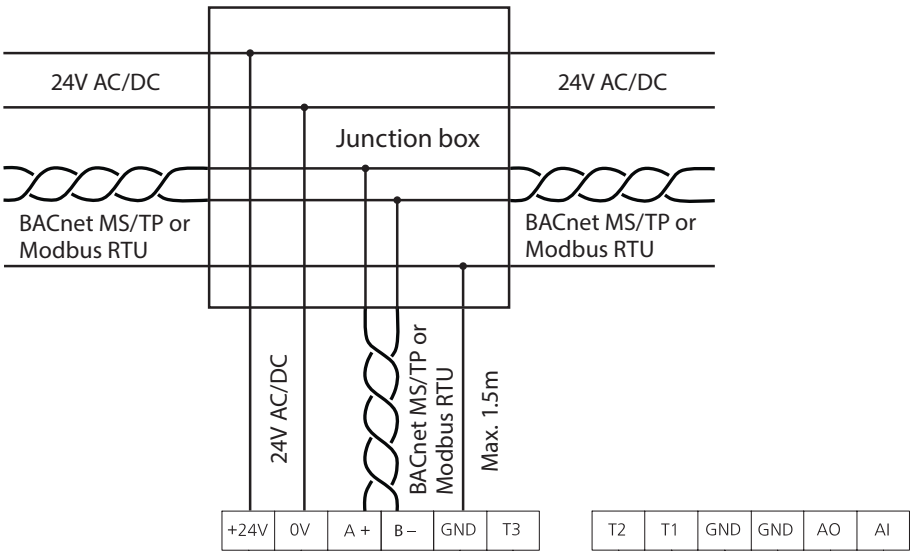

GND is common for all signals

LED Display

NovoCon® S

BACnet/Modbus (RS485) activity

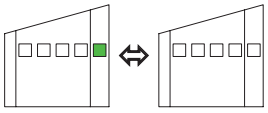

BACnet/Modbus (RS485) activity
No light from LED: Actuator sees no activity on the network.
LED turn on and off quickly, 10x/second:
Normal operation on the network communication is OK.
LED turn on and off slowly with green light, 3x/second: Normal operation on the network - communication over longer time directly with this actuator.

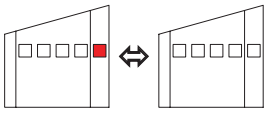

BACnet/Modbus (RS485) activity with ERRORS
LED turns on and off slowly, 3x/second, with RED color: Actuator sees activity, but with errors.
LED turn on and off quickly, 10x/second, with RED color: Communication is OK, EXCEPT that another device may be using the same MAC address.

Position of valve/actuator

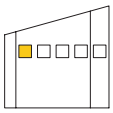

AB-QM valve is **fully closed.**

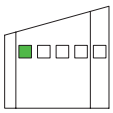

AB-QM is open 1-24% of Design Flow.

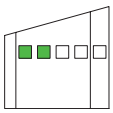

AB-QM is open 25-49% of Design Flow.

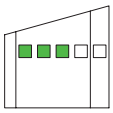

AB-QM is open 50-74% of Design Flow.

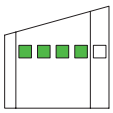

AB-QM is open 75-99% of Design Flow.

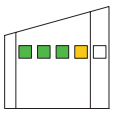

AB-QM valve is open 100% of Design Flow.

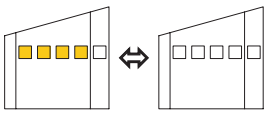

Flush is active
All LEDs turns on/off with specific period.

© Danfoss | 2023.01

LED Display *(continued)*

NovoCon® S *(continued)*

Movement of valve/actuator

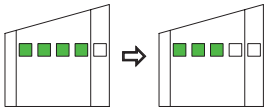

NovoCon® S is closing the valve
All green LEDs are turned ON, then turned OFF one at the time (repeatedly).

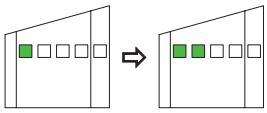

NovoCon® S is opening the valve
All green LEDs are turned OFF, then turned ON one at the time (repeatedly).

NovoCon® S is calibrating
Green light moves forward and backwards, one by one.

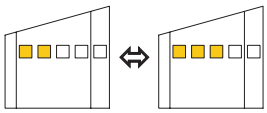

De-air is active
Yellow LEDs are turned ON one by one, then turned OFF one by one (repeatedly).

Information from actuator

Blinking function, all green LEDs turns on/off. Used to physically identify individual actuator on the bus.

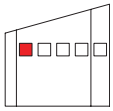

Error during closing
Debris might be trapped under the AB-QM valve cone. Flushing may solve the problem.

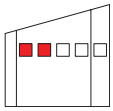

Temperature inside NovoCon® S is out of the recommended range
LEDs change between showing the alarms and showing normal operation. Ambient temperature has likely exceeded 60°C.

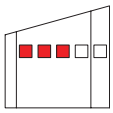

Internal NovoCon® S error
LEDs change between showing the alarms and showing normal between operation. Try:
A: Re-calibrate.
B: Turn power off and on.
C: If the error does not disappear actuator replacement can be necessary.

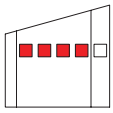

Error during NovoCon® S calibration
LEDs change between showing the alarms and showing normal operation. Verify if the NovoCon® S is correctly attached to the valve and recalibrate.

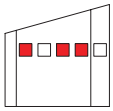

Power supply is outside limits
LEDs change between showing the alarms and showing normal operation. Use analog cables as voltage booster.

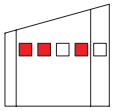

No Control Signal
In analog control the broken control wire is detected.
In CO6 mode or Inverted CO6 mode the ChangeOver[6] actuator is not connected or damaged.

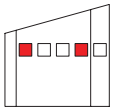

ChangeOver[6] actuator
The ChangeOver[6] actuator is in manual override or unable to reach position.

LEDs change between showing the alarms and showing normal operation.

LED Display *(continued)*

NovoCon® S *(continued)*

Pressing the mode button during normal operation

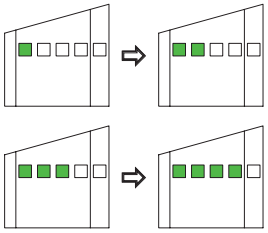

Calibration/Reset/Flush
Press reset button. All LED's are turned off.
Keep pressing the reset button for
1 second: 1 LED ON
2 seconds: 2 LEDs ON = Start calibration (Reset).
3 seconds: 3 LEDs ON
4 seconds: 4 LEDs ON = Start flushing.
5 seconds or more = Return to normal operation.

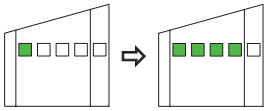

Factory reset - reset to default settings
Press and hold the reset button and then power up the actuator, all LED's are initially turned off.
Keep pressing the reset button until 4 LED's are turned on = Reset to default settings.

When factory reset is performed it is shown by:
1 short flash with all yellow position LED's.
Note that after factory reset a calibration will be automatically be performed and all settings are reverted to factory settings.

NovoCon® M

BACnet/Modbus (RS485) activity

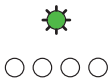

BACnet/Modbus (RS485) activity
No light from LED: Actuator sees no activity on the network.
LED turn on and off quickly, 10x/second:
Normal operation on the network communication is OK.
LED turn on and off slowly with green light, 3x/second: Normal operation on the network - communication over longer time directly with this actuator.

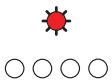

BACnet/Modbus (RS485) activity with ERRORS
LED turns on and off slowly, 3x/second, with RED color: Actuator sees activity, but with errors.
LED turn on and off quickly, 10x/second, with RED color: Communication is OK, EXCEPT that another device may be using the same MAC address.

Position of valve/actuator

AB-QM valve is **fully closed.**

AB-QM is open 1-24% of Design Flow.

AB-QM is open 25-49% of Design Flow.

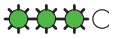

AB-QM is open 50-74% of Design Flow.

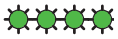

AB-QM is open 75-99% of Design Flow.

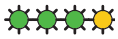

AB-QM valve is **open 100% of Design Flow.**

Flush is active
All LEDs turns on/off with specific period.

Movement of valve/actuator

NovoCon® is closing the valve
All green LEDs are turned ON, then turned OFF one at the time (repeatedly).

NovoCon® is opening the valve
All green LEDs are turned OFF, then turned ON one at the time (repeatedly).

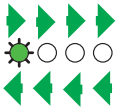

NovoCon® is calibrating
Green light moves forward and backwards, one by one.

De-air is active
Yellow LEDs are turned ON one by one, then turned OFF one by one (repeatedly).

© Danfoss | 2023.01

LED Display *(continued)*

NovoCon® M *(continued)*

Information from actuator

🟢🟢🟢🟢	**Blinking function**, all green LEDs turns on/off. Used to physically identify individual actuator on the bus.
🔴○○○	**Error during closing** Debris might be trapped under the AB-QM valve cone. Flushing may solve the problem.
🔴🔴○○	**Temperature inside NovoCon® is out of the recommended range** LEDs change between showing the alarms and showing normal operation. Ambient temperature has likely exceeded 60°C.
🔴🔴🔴○	**Internal NovoCon® error** LEDs change between showing the alarms and showing normal between operation. Try: A: Re-calibrate. B: Turn power off and on. C: If the error does not disappear actuator replacement can be necessary.
🔴🔴🔴🔴	**Error during NovoCon® calibration** LEDs change between showing the alarms and showing normal operation. Verify if the NovoCon® M is correctly attached to the valve and recalibrate.
🔴○🔴🔴	**Power supply is outside limits** LEDs change between showing the alarms and showing normal operation.
🔴🔴○🔴	**No Control Signal** In analog control mode a broken control wire is detected.

LEDs change between showing the alarms and showing normal operation.

Pressing the mode button during normal operation

🟢○○○ ⇨ 🟢🟢○○ 🟢🟢🟢○ ⇨ 🟢🟢🟢🟢	**Calibration/Reset/Flush** Press reset button. All LED's are turned off. Keep pressing the reset button for 1 second: 1 LED ON 2 seconds: 2 LEDs ON = Start calibration (Reset). 3 seconds: 3 LEDs ON 4 seconds: 4 LEDs ON = Start flushing. 5 seconds or more = Return to normal operation.
🟢○○○ ⇨ 🟢🟢🟢🟢 🟡🟡🟡🟡	**Factory reset - reset to default settings** Press and hold the reset button and then power up the actuator, all LED's are initially turned off. Keep pressing the reset button until 4 LED's are turned on = Reset to default settings. **When factory reset is performed it is shown by:** 1 short flash with all yellow position LED's. Note that after factory reset a calibration will be automatically be performed and all settings are reverted to factory settings.

LED Display *(continued)*

NovoCon® L, XL

BACnet/Modbus (RS485) activity

BACnet/Modbus (RS485) activity
No light from LED: Actuator sees no activity on the network.
LED turn on and off quickly, 10x/second:
Normal operation on the network communication is OK.
LED turn on and off slowly with green light, 3x/second: Normal operation on the network - communication over longer time directly with this actuator.

BACnet/Modbus (RS485) activity with ERRORS
LED turns on and off slowly, 3x/second, with RED color: Actuator sees activity, but with errors.
LED turn on and off quickly, 10x/second, with RED color: Communication is OK, EXCEPT that another device may be using the same MAC address.

Position of valve/actuator

AB-QM valve is **fully closed.**

AB-QM is open 1-49% of Design Flow.

AB-QM is open 50-99% of Design Flow.

AB-QM valve is **open 100% of Design Flow.**

Flush is active
All LEDs turns on/off with specific period.

Movement of valve/actuator

NovoCon® is closing the valve
All green LEDs are turned ON, then turned OFF one at the time (repeatedly).

NovoCon® is opening the valve
All green LEDs are turned OFF, then turned ON one at the time (repeatedly).

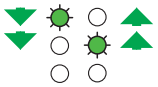

NovoCon® is calibrating
Green light blink alternately.

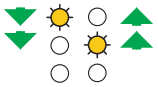

De-air is active
Yellow LEDs blink alternately.

Stand-by mode

Information from actuator

Blinking function, all green LEDs turns on/off. Used to physically identify individual actuator on the bus.

© Danfoss | 2023.01

LED Display *(continued)*

NovoCon® L, XL *(continued)*

Information from actuator *(continued)*

● ○ ○	**Error during closing** Debris might be trapped under the AB-QM valve cone. Flushing may solve the problem. **Error during NovoCon® calibration** LEDs change between showing the alarms and showing normal operation. Verify if the NovoCon® L/XL is correctly attached to the valve and recalibrate.
● ● ○	**Temperature inside NovoCon® is out of the recommended range** LEDs change between showing the alarms and showing normal operation. Ambient temperature has likely exceeded 60°C. **Internal NovoCon® error** LEDs change between showing the alarms and showing normal between operation. Try: A: Re-calibrate. B: Turn power off and on. C: If the error does not disappear actuator replacement can be necessary. **Power supply is outside limits** LEDs change between showing the alarms and showing normal operation.
○ ● ○	**No Control Signal** In analog control mode a broken control wire is detected.

LEDs change between showing the alarms and showing normal operation.

Pressing the mode button during normal operation

	Calibration/Reset/Flush Press MODE button. All LED's are turned off. Keep pressing the reset button for
○ ○ ●	1 second: 1 LED ON = Standby mode
○ ● ●	2 seconds: 2 LEDs ON = Start calibration (Reset).
○ ● ○	3 seconds: 1 LEDs ON
○ ○ ○	4 seconds: Start flushing. If flushing should be stopped before the default timeout on 1 hour, press again for 1 sec.
○ ○ ○	**Factory reset - reset to default settings** Press and hold the MODE button and then power up the actuator, all LED's are initially turned off. Keep pressing the MODE button for 4 seconds = Reset to default settings.
○ ● ●	**When factory reset is performed it is shown by:** 1 short flash with all yellow position LED's. Note that after factory reset a calibration will be automatically be performed and all settings are reverted to factory settings.

Application principle NovoCon® S I/O

When combining the NovoCon® S and the Cable NovoCon® I/O, many options are possible

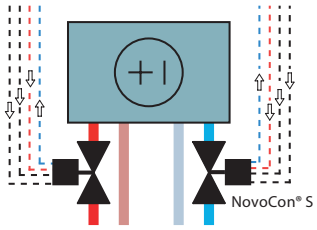

Resistance inputs can also be used as galvanic insulated digital inputs for detection of window contact, condensation switch etc. Connected: <900 Ohm. Disconnected 100 kOhm.

Operation example (DDC command)

Object /Register	Write value	Description
AV:1 / 33280	85	DDC writes % opening value of the AB-QM valve
AO:0 / 33286	5.5	DDC writes level of voltage on NovoCon® S analog output, which is sent to the connected remote device

Read on the BMS example

Object /Register	Read value	Description
AO:0 / 33286	5.5	Voltage output from NovoCon® S to remote device
AI:0 / 33216	6.5	Voltage level on the analog control input measured by the actuator (may also be mA)
AI:1 / 33218	1160	Resistance value (Ohm) received from remote device 1
AI:2 / 33220	1263	Resistance value (Ohm) received from remote device 2

Application principle NovoCon® I/O and Multiplexers/Relays

Multiplexers and relays (analog-digital-analog convertors) in combination with NovoCon® S, may be used to gather information on, or control on/off devices.

Using NovoCon's 0-10V output signal (AO:0 / 33286), multiplexer relays convert this signal in order to switch devices on or off e.g. 7V signal from NovoCon® S is converted inside the multiplexer so device1=on, device 2=on, device3=off. E.g. 4V signal from NovoCon® S is converted inside the multiplexer so the device1=on, device 2=off, device3=off.

Using NovoCon's 0-10V input signal (AI:0 / 33216) received from the multiplexers, the DDC can decipher the meaning of the voltage signal e.g. 7V signal to NovoCon® S from the multiplexer is deciphered by the DDC as meaning device1=on, device 2=on, device3=off. 4V signal to NovoCon® S from the multiplexer is deciphered by the DDC as meaning device1=on, device 2=off, device3=off.

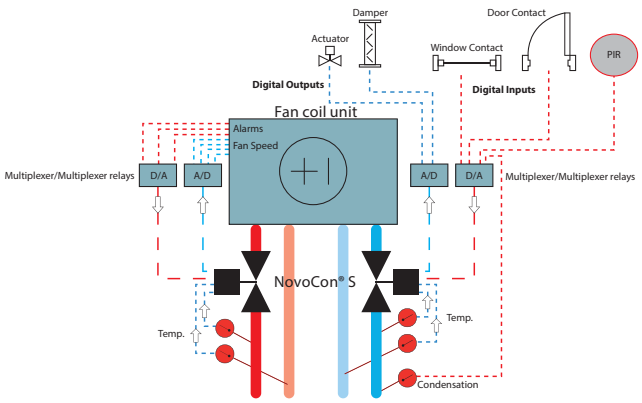

Application principle: Central Plant Changeover – 2 pipe system

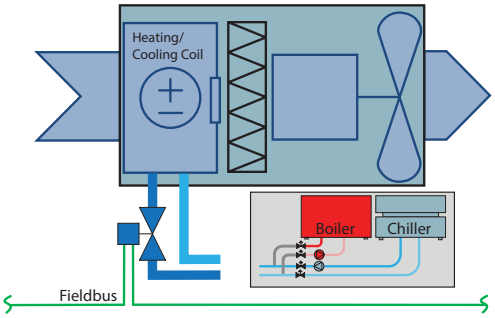

Object / Register	Write/ read value	Description
MSV:9 / 32810	Digital / Analog	The Heating and Cooling Design flow values below may be used.
MSV:3 / 32802	Selected Valve Type	ISO valve selected = l/h, °C , kW and kg/m³. ANSI valve selected = GPM, °F, kBTU and lb/ft³
AV:30 / 32796	250	Design flow setting of Heating e.g. 250 l/h
AV:31 / 32798	400	Design flow setting of Cooling e.g. 400 l/h
MSV:10 / 32811	Cooling	When the system is changed from central Heating to central Cooling the affected NovoCons may be written to so the correct Design flow will be adopted.

© Danfoss | 2023.01

Application principle ChangeOver⁶ - 4 pipe system

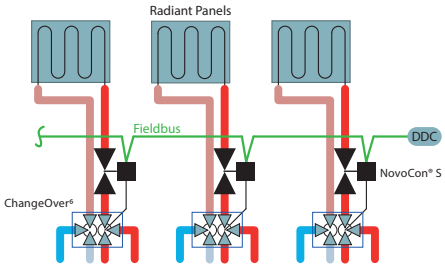

Separate maximum flow pre-setting for heating and for cooling

Setup

Object / Register	Write/ read value	Description
MSV:9 / 32810	CO6 mode	While in CO6 mode, the V/mA input and output signals are used purely for controlling the 6-port valve actuator
MSV:3 / 32802	Selected Valve Type	ISO valve selected = l/h, °C , kW and kg/m³. ANSI valve selected = g/min, °F, kBTU and lb/ft³
AV:30 / 32796	250	Design flow setting of Heating e.g. 250 l/h
AV:31 / 32798	400	Design flow setting of Cooling e.g. 400 l/h

Application principle ChangeOver⁶ Energy

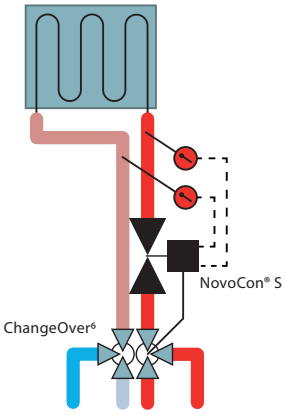

Setup

Object /Register	Write/read value	Description
MSV:9 / 32810	CO6 mode	While in CO6 mode, the V/mA input and output signals are used purely for controlling the 6-port valve actuator
AV:32 / 33288	Power emission	Calculates energy based on values from flow feedback (AV:2) and temperature (AI:1 and AI:2)
AV:33 / 33290	Heating Energy Counter	Accumulate Energy counter for heating
AV:34 / 33292	Cooling Energy Counter	Accumulate Energy counter for cooling
MSV:3 / 32802	Selected Valve Type	ISO valve selected = l/h, °C , kW and kg/m³. ANSI valve selected = g/min, °F, kBTU and lb/ft³
AI:1 / 33218	Temperature	Select between temperature units or ohms
AI:2 / 33220	Temperature	Select between temperature units or ohms
AV:30 / 32796	250	Design flow setting of Heating e.g. 250 l/h
AV:31 / 32798	400	Design flow setting of Cooling e.g. 400 l/h

Application principle Analog CO6 mode

With the Object MSV:9 / register 32810 state 7 or 8 both NovoCon® S and the NovoCon® ChangeOver⁶ can be controlled by a single voltage output from a room controller.
NovoCon® S can be customized to match the voltage values outputted by any room controller to both changeover and control the flow. This is done by configuring the objects AV:50-53 / register 32848-32854.

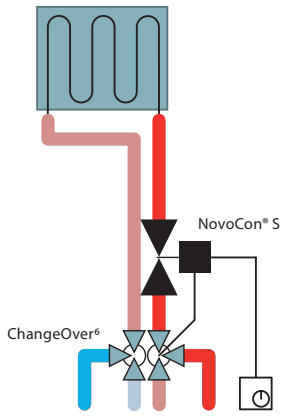

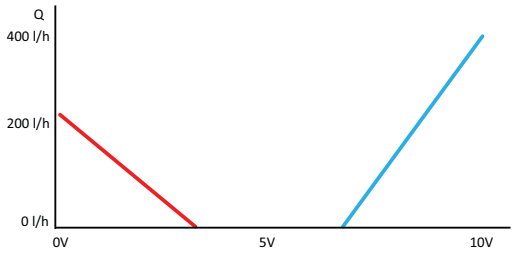

Setup

Object /Register	Write/read value	Description
MSV:9 / 32810	Analog CO6 mode	The flow and changeover signal is controlled by a single analog input.
MSV:3 / 32802	Valve type	ISO valve selected = l/h, °C , kW and kg/m3.
		ANSI valve selected = g/min, °F, kBTU and lb/ft3
AV:30 / 32796	200	Design flow setting of Heating e.g. 200 l/h
AV:31 / 32798	400	Design flow setting of Cooling e.g. 400 l/h
BV:2 / 32786	Direct	Used to switch the heating and cooling control signal from the Room controller. Must be set before AV:50-53 / register 32848-32854.
AV:50 / 32848	0	The control signal (V) for heating 100% open when MSV:9 / register 32810 = State 7 or 8.
AV:51 / 32850	3.3	The control signal (V) for heating 0% open when MSV:9 / register 32810 = State 7 or 8.
AV:52 / 32852	6.7	The control signal (V) for cooling 0% open when MSV:9 / register 32810 = State 7 or 8.
AV:53 / 32854	10	The control signal (V) for cooling 100% open when MSV:9 / register 32810= State 7 or 8.

Application principle
Analog CO6 mode *(continued)*

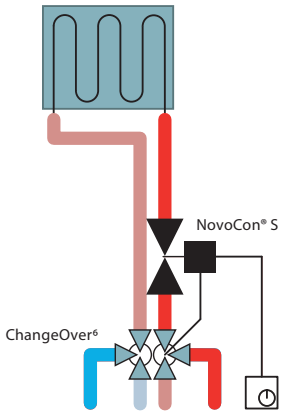

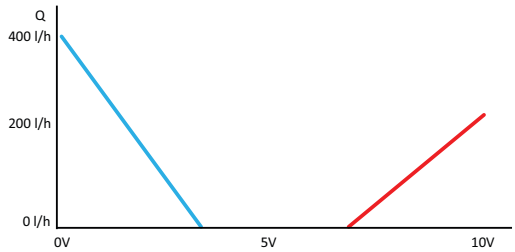

Setup

Object /Register	Write/read value	Description
MSV:9 / 32810	Analog CO6 mode	The flow and changeover signal is controlled by a single analog input.
MSV:3 / 32802	Valve type	ISO valve selected = l/h, °C , kW and kg/m3.
		ANSI valve selected = g/min, °F, kBTU and lb/ft3
AV:30 / 32796	200	Design flow setting of Heating e.g. 200 l/h
AV:31 / 32798	400	Design flow setting of Cooling e.g. 400 l/h
BV:2 / 32786	Inverse	Used to switch the heating and cooling control signal from the Room controller. Must be set before AV:50-53 / register 32848-32854.
AV:50 / 32848	10	The control signal (V) for heating 100% open when MSV:9 / register 32810 = State 7 or 8.
AV:51 / 32850	6.7	The control signal (V) for heating 0% open when MSV:9 / register 32810 = State 7 or 8.
AV:52 / 32852	3.3	The control signal (V) for cooling 0% open when MSV:9 / register 32810 = State 7 or 8.
AV:53 / 32854	0	The control signal (V) for cooling 100% open when MSV:9 / register 32810= State 7 or 8.

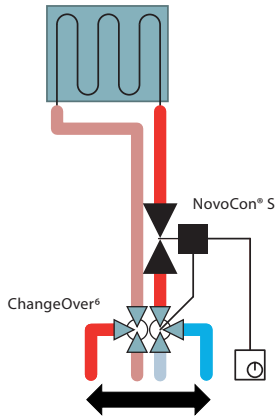

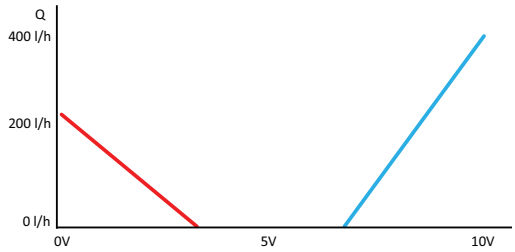

Setup

Object /Register	Write/read value	Description
MSV:9 / 32810	Analog inverted CO6 mode	The flow and changeover signal is controlled by a single analog input.
MSV:3 / 32802	Valve type	ISO valve selected = l/h, °C , kW and kg/m3.
		ANSI valve selected = g/min, °F, kBTU and lb/ft3
AV:30 / 32796	200	Design flow setting of Heating e.g. 200 l/h
AV:31 / 32798	400	Design flow setting of Cooling e.g. 400 l/h
BV:2 / 32786	Direct	Used to switch the heating and cooling control signal from the Room controller. Must be set before AV:50-53 / register 32848-32854.
AV:50 / 32848	0	The control signal (V) for heating 100% open when MSV:9 / register 32810 = State 7 or 8.
AV:51 / 32850	3.3	The control signal (V) for heating 0% open when MSV:9 / register 32810 = State 7 or 8.
AV:52 / 32852	6.7	The control signal (V) for cooling 0% open when MSV:9 / register 32810 = State 7 or 8.
AV:53 / 32854	10	The control signal (V) for cooling 100% open when MSV:9 / register 32810= State 7 or 8.

© Danfoss | 2023.01

Application principle
Analog CO6 mode *(continued)*

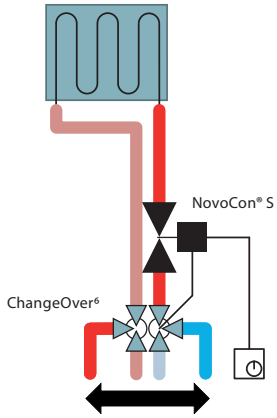

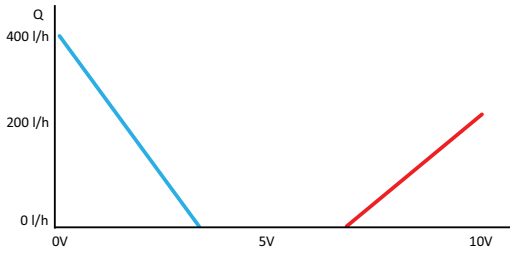

Setup

Object /Register	Write/read value	Description
MSV:9 / 32810	Analog inverted CO6 mode	The flow and changeover signal is controlled by a single analog input.
MSV:3 / 32802	Valve type	ISO valve selected = l/h, °C , kW and kg/m3.
		ANSI valve selected = g/min, °F, kBTU and lb/ft3
AV:30 / 32796	200	Design flow setting of Heating e.g. 200 l/h
AV:31 / 32798	400	Design flow setting of Cooling e.g. 400 l/h
BV:2 / 32786	Inverse	Used to switch the heating and cooling control signal from the Room controller. Must be set before AV:50-53 / register 32848-32854.
AV:50 / 32848	10	The control signal (V) for heating 100% open when MSV:9 / register 32810 = State 7 or 8.
AV:51 / 32850	6.7	The control signal (V) for heating 0% open when MSV:9 / register 32810 = State 7 or 8.
AV:52 / 32852	3.3	The control signal (V) for cooling 0% open when MSV:9 / register 32810 = State 7 or 8.
AV:53 / 32854	0	The control signal (V) for cooling 100% open when MSV:9 / register 32810= State 7 or 8.

Application principle
ChangeOver⁶

The ChangeOver⁶ is a 6-port valve with a rotary actuator that switches the flow between heating and cooling. An AB-QM pressure independent balancing and control valve with an actuator is used to balance the system and modulate the flow. When using the NovoCon® S for flow control, both NovoCon® S and the Actuator NovoCon® ChangeOver⁶ are represented on the fieldbus network and need no physical I/O for control.

Anti-sticking requirements:
To reduce the risk of the ball valve sticking due to water quality, the valve must be partially rotated at least every 7 days. This is a factory default setting and is handled by the object MSV:11 / register 32812.

Cooling:

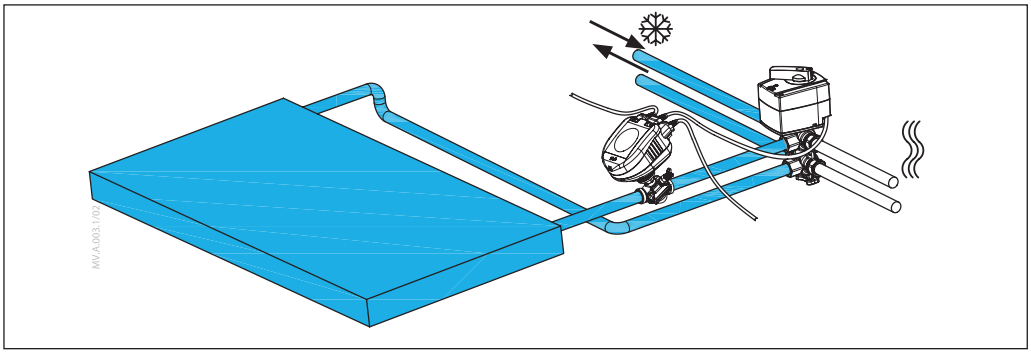

Heating:

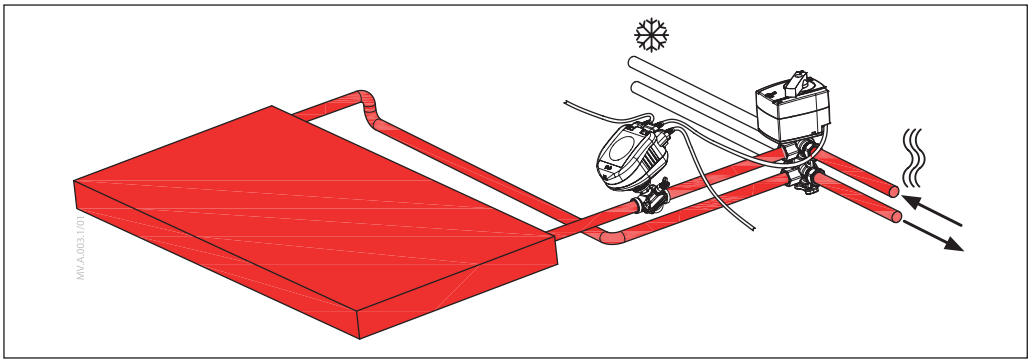

No mixing and shut off

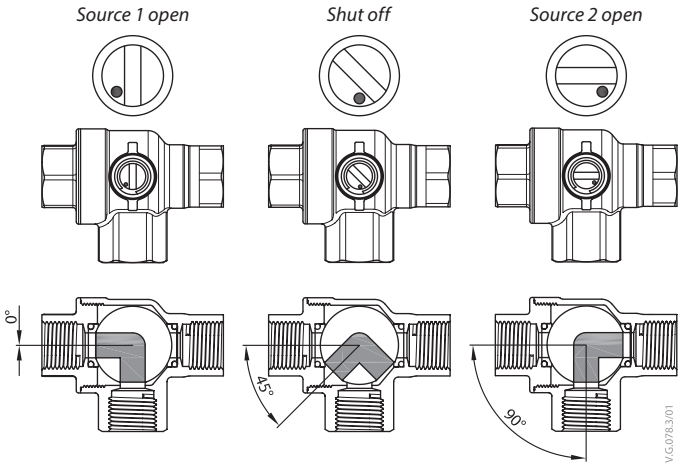

Normally cooling is connected to port 1 and 4 and heating to port 5 and 6. If, for some reason, this is not the case, then Inverted CO6 mode (MSV:9/32810) must be used instead.

CO6, contrary to other ball valves, includes a shut off function. This function should only be used during maintenance and not during operation. This replaces the need for four ball valves.
The Shut off command can only be performed when the Flow Rate Setpoint (AV:1/33280) is 0.

Application mode

State 3: CO6 Mode

Normally cooling is connected to ports 1 and 4 and heating to ports 5 and 6.
If that is not possible, then this may be switched and state **4: Inverted CO6 Mode** must be selected.

NovoCon® S and the ChangeOver[6] actuator communicate with voltage control and feedback signal. Whole functionality is available by using simple bus commands. For easier technical understanding, please see below detailed explanation of the communication between NovoCon® S and the ChangeOver[6] actuator.

CO6 mode

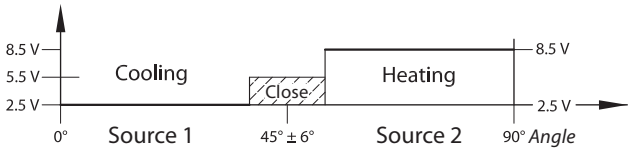

Cooling connected to port 1 and 4 Heating connected to port 5 and 6

Inverted CO6 mode

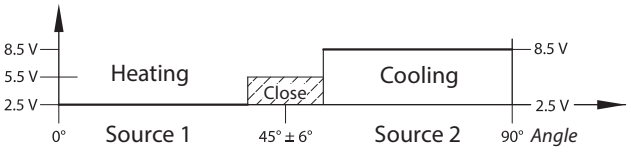

Heating connected to port 1 and 4 Cooling connected to port 5 and 6

Signal from NovoCon® S to the Actuator NovoCon® ChangeOver[6]

	Stop the motor	Cooling	Shut-off	Heating
CO6 mode	1.0 V	2.5 V	5.5 V	8.5 V
Inverted CO6 mode	1.0 V	8.5 V	5.5 V	2.5 V

Feedback signal from the Actuator NovoCon® ChangeOver[6]

Unable to move	Cooling	Moving direction: Cooling to Heating	Shut-off	Moving direction: Heating to Cooling	Heating
1.0 V	2.5 V	4.0	5.5 V	7.0 V	8.5 V

 © Danfoss | 2023.01

BACnet objects and Modbus registers usage

- Design flow rate setting

General

There are simple BACnet and Modbus settings that are essential to the basic setup configuration of NovoCon® in order to communicate and control. These are contained in the BACnet objects or in decimal format Modbus registers.

NovoCon® S

Initial configuration

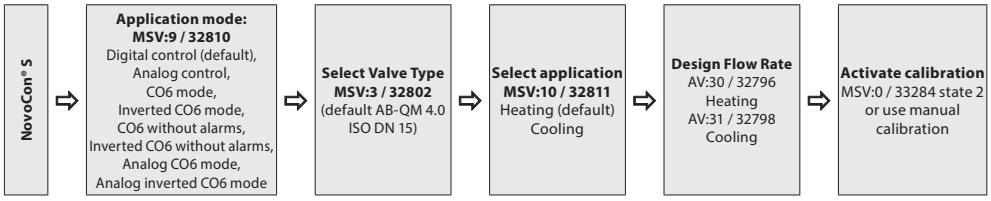

NovoCon® M

Initial configuration

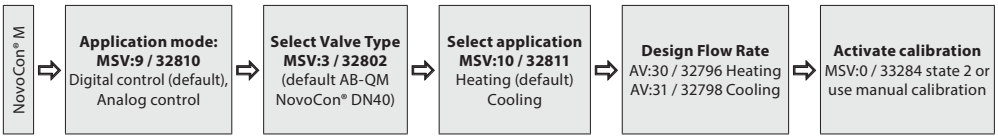

NovoCon® L, XL

Initial configuration NovoCon® L

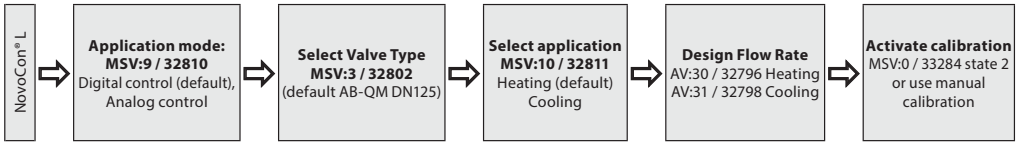

Initial configuration NovoCon® XL

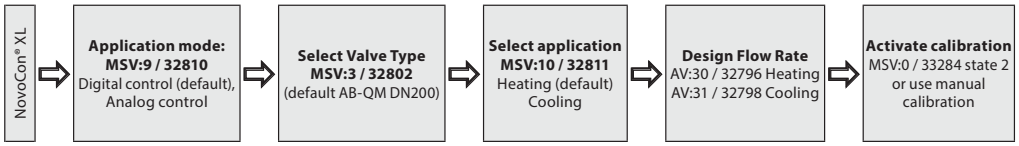

BACnet objects and Modbus registers usage *(continued)*

- Advanced configuration and features

If the default setup of the actuator isn't suitable, special attention has to be payed to the following objects:

MSV:9 / 32810	Application mode
MSV:3 / 32802	Selected Valve Type
MSV:10 / 32811	Application command & status
AV:30 / 32796	Design Flow Rate Heating
AV:31 / 32798	Design Flow Rate Cooling
MSV:0 / 33284	Actuator Mode and special features
AI:1 / 33218	T1 value, temperature or resistance input
AI:2 / 33220	T2 value, temperature or resistance input
AI:3 / 33222	T3 value, temperature or resistance input
AV:32 / 33288	Power emission
MSV:13 / 32815	Energy management

Application mode:
The default Application mode is Digital Control. In this mode the NovoCon® M is controlled via fieldbus and the voltage inputs and outputs are available to connect other devices. Alternatively, in Analog Control mode the NovoCon is expecting an analog control signal.

Selection of AB-QM valve type:
After selecting Application mode (see above), it is then necessary to select the AB-QM valve type that the actuator is mounted on. This is done with the object MSV:3 / 32802 Selected Valve Type. The present value of MSV:3 / 32802 may be set to values between 1 and 9. Each number represents a specific AB-QM valve type, which can be found in the table: Valve type selection. The default value for MSV:3 / 32802 is 1 i.e. AB-QM ISO DN40 valve.

Selection and setting of engineering units:
If there is a need to change the default engineering units, this is done in BACnet via the object's engineering units property or in separate objects, and in Modbus via separate registers. See the BACnet and Modbus tables for more details.

Setting the Design Flow Rate:
The designed maximum flow rate of the controlled system should be set if the nominal flow of the valve does not correspond to the designed maximum flow rate. The Design Flow Rate is set by changing the present value of:
• AV:30 / 32796 Design Flow Rate for Heating applications
• AV:31 / 32798 Design Flow Rate for Cooling applications

Temperature measurements:
AI:1 / 33218 Temperature T1 or resistance input, AI:2 / 33220 Temperature T2 or resistance input and AI:3 / 33222 Temperature T3 or resistance input are used to measure the temperature with temperature sensors. The resistance value may also be shown directly if selected, allowing these inputs to be used for other purposes than measuring temperature e.g. window contacts or other potential free contacts. Closed circuit <900Ω, open circuit 100kΩ.

Power emission:
AV:32 / 33288 Power emission is used to show the present hydronic power emission of the terminal unit, based on calculations from water flow rate and the temperature difference between supply and return pipes.

Energy Counter:
Either the Cooling or Heating thermal energy used is counted and logged under AV:33 / 33290 or AV:34 / 33292. This function is enabled and disabled with MSV:12 / 32814.

Flushing a system:
Actuator Mode and Special Features MSV:0 / 33284 has an option which allows the user to flush the system via the fieldbus. To start flushing the system, set MSV:0 / 33284 to 3, Flush. The actuator will then open up the AB-QM valve completely. Flush will end when:

- MSV:0 / 33284 is set back to 1 = Normal operation
- Or the power is cycled.
- Or the flush function times-out after 1 hour.

When flushing ends, the actuator returns to normal operation.

De-Airing of a system:
With MSV:0 / 33284, is it also possible to start the De-Air function in the actuator. This function will open and close the AB-QM valve a number times, helping getting rid of trapped air in the hydronic system. Start De-Air by setting MSV:0 / 33284 to 4. De-air will run undisturbed until it ends. The state of the actuator will then go back to normal operation i.e. MSV:0 / 33284 = 1, Normal.

Controlling the actuator:
Under normal operation (Digital Control) of the actuator, where the flow through the AB-QM valve is to be controlled, the object Flow Rate Setpoint AV:1 / 33280 is used. The default setting for the Flow Rate Setpoint engineering unit is %.

This is the most suitable setting as the controller does not need to know anything about the Design Flow Rate setting of the actuator. The output signal from the controller needs only to be set up so it regulates from 0 to 100% of the Heating Design Flow Rate AV:30 / 32796 or Cooling Design Flow Rate AV:31 /32798. Alternative Design Flow Rate AV:0 / 32768 can be used.
To change the flow rate through the valve, the present value of AV:1 / 33280 is written-to, in the range 0 – 100%.

If the engineering unit selected for AV:1 / 33280 must be l/h, the Flow Rate Setpoint through the valve must be written-to in integers representing l/h. An example of this could be a controller writing values to the actuator in the range 0 to 7500 l/h for a DN40 valve.

Alarms and warnings:
System issues can be detected by using BACnet object values BV:10 to BV:24 or Modbus register 33536, see BACnet and Modbus tables for more details.

 © Danfoss | 2023.01

Optimize BACnet network speed

Reducing Unnecessary PollforMaster Traffic

The MAX_MASTER setting in NovoCon® S can be set above the number of the highest used MAC address in the MS/TP sub network. The MAX_MASTER property is found in the Device object and has a default value of 127. If used, it should be noted that the MAX_MASTER property value should be adjusted accordingly at a later stage prior to adding more devices to the network when the highest MAC address exceeds the MAX_MASTER property value.

Important: Before MAX_MASTER can be set, ensure **ALL** network device MAC addresses are below the intended MAX_MASTER property value. Failure to do this may result in network communication problems.

Allocating Correct INFO_FRAMES

Setting for Controller:
Network Routers and Controller devices that transport traffic in the MS/TP network require a higher number of INFO_FRAMES than NovoCon® S. Therefore, these devices should have a higher value than NovoCon® S. A general rule of thumb for the sub network router's MAX_INFO_FRAMES property value is equal to the amount of MS/TP devices in the router's sub network. The MAX_INFO_FRAMES property is found in the Device object of MS/TP devices. NovoCon's default MAX_INFO_FRAMES value is 1.

Energy management MSV:13 / 32815

General Information - Energy Limitation States:
For all 'limitation' states within MSV:13/32815, a warning will be activated and made visible on the bus to inform the user that NovoCon® has taken control of the flow rate through the AB-QM valve. Whilst under NovoCon® control, the valve will not be closed at any time i.e. closing % constraints are contained within its algorithms, although an external device's control signal will always be able to close the valve. If the energy limitation settings are unobtainable without NovoCon® closing itself, a warning will be activated to inform the user that the set-point value is 'out of range'. Please note that NovoCon® will not automatically relinquish control of the flow rate as soon as the set-point is achieved if the external device e.g. DDC differs greatly with that of NovoCon's® calculated flow rate/opening %.
TIP: This information may be used by the user to improve the external control device's PID.

General Information - Energy Control States:
For all 'control' states, except Power control, within MSV:13/32815, NovoCon® takes full control over the flow rate through the AB-QM valve and will not accept a control signal from an external device. Whilst under NovoCon® control, the valve will not be fully closed at any time i.e. closing % constraints are contained within its algorithms. If the energy control settings are unobtainable without NovoCon® closing or opening itself fully, a warning will be activated to inform the user that the set-point value is 'out of range'.

If MSV:13 (energy application) is switched from "not used" to:
- power limitation/control or delta temp. lim./control: T1 function and T2 function are locked to Supply/ return temperature – these cannot be changed until app is disabled.
- return temp. limitation/control: The terminal corresponding to "return temperature function" is locked and cannot be changed until energy app is disabled.

Power Manager

State 1: Not active
Energy management applications are disabled.

State 2: Power limitation (chilled water example)
NovoCon® S calculates the instantaneous hydronic power used and will then, when required, override the DDC control signal and limit the flow rate / hydronic power according to the user defined values in object / register AV:35 or 36 / 32832 or 32834. The hydronic power is limited by closing the valve until the kW value measured, once again, falls below the defined limit. There are user defined limits for both Cooling Power and Heating Power. When this limitation is active, the warning object BV:23 / bit 23 in register 33536 will be set to 'on'.
Application example: When the "Power" is limited in this way we are able to prevent over consumption (during peak load) and balance design power distribution.

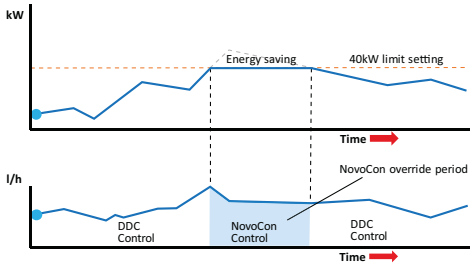

Object/ Register	Write/read value	Description
MSV:9 / 32810	Digital	NovoCon/AB-QM opening degree command via BUS
MSV:3 / 32802	Selected Valve Type	ISO valve selected = l/h, °C , kW and kg/m³. ANSI valve selected = g/min, °F and kBTU.
AV:31 / 32798	Cooling	Design flow setting of Cooling e.g. 400 l/h
MSV:13 / 32815	Power Limitation	The Cooling max hydronic power value that NovoCon will not exceed e.g. 2kW
AV:36 / 32834	Cooling max. power value	The value that NovoCon will ensure the calculated power emission will not exceed e.g. 4kW
AV:46 / 32862	10%	Energy management minimum flow in percentage of Design flow Rate.

State 3: Power control
Power emission is controlled directly in kW, kBTU or % and not l/hr / GPM. The flowrate through the valve is controlled by the Flow Rate setpoint AV:1 in kW or kBTU/h (selected in MSV:21 / 32788) and is based on the flowrate and temperature inputs which are used to calculate the power consumption.
Application example: Tempering a space (e.g. in storage hall) where we can set and keep the energy output constant.

Energy management
MSV:13 / 32815 *(continued)*

Delta T Manager

State 4: Min. Delta T limitation (heating water example)

NovoCon® S, when required, overrides the DDC control signal and maintains a minimum temperature difference between the flow and return temperatures by starting to close the valve when the user defined minimum delta T is not achieved. As the flow temperature increases/decreases, so will the calculated minimum set-point for the return temperature. This always ensures a minimum energy transfer to the FCU irrespective of the flow temperature. This state may also be used in CO6 mode and will apply the appropriate value whilst in cooling/heating mode.
For heating, the delta T value is set in object / register AV:37 / 32836. When conditions allow for this limitation to be activated, the warning object BV:23 / bit 23 in register 33536 will be set to 'on'.
Application example: When we would like to improve the efficiency of boiler/chiller we can define the Minimum Delta T in the system with respect to outside temperatures.

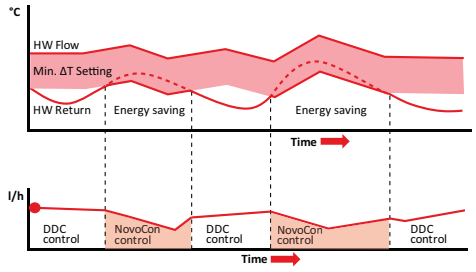

Object/ Register	Write/ read value	Description
MSV:9 / 32810	Digital	NovoCon/AB-QM opening degree command via BUS
MSV:3 / 32802	Selected Valve Type	ISO valve selected = l/h, °C and kW. ANSI valve selected = GPM, °F and kBTU.
MSV:10 / 32811	Heating	Any control algorithms used are with AI:1>AI:2 in mind
AV:30 / 32796	250	Design flow setting of Heating e.g. 250 l/h
MSV:13 / 32815	Min. Delta T limitation	Constantly ensures the flow and return temperature difference do not fall below a specified value
AV:37 / 32836	Heating Delta T value	The delta T value that NovoCon will not fall below e.g. 20°C
AV:46 / 32862	10%	Energy management minimum flow in percentage of Design flow Rate.

State 4: Min. Delta T limitation (chilled water example)

Application example: When we would like to improve the efficiency in the system we can define the Minimum Delta T in the system.

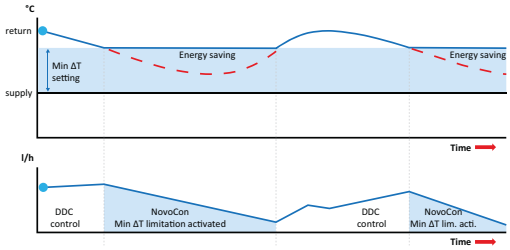

Object/ Register	Write/read value	Description
MSV:9 / 32810	Digital	NovoCon/AB-QM opening degree command via BUS
MSV:3 / 32802	Selected Valve Type	ISO valve selected = l/h, °C , kW and kg/ m^3. ANSI valve selected = g/min, °F, kBTU and lb/ft3
MSV:10 / 32811	Cooling	Any control algorithms used are with AI:1>AI:2 in mind
AV:31 / 32798	400	Design flow setting of Cooling e.g. 400 l/h
MSV:13 / 32815	Min. delta T limitation	Constantly ensures the flow and return temperature difference do not fall below a specified value
AV:38 / 32838	Cooling Delta T value	The delta T value that NovoCon will no fall below e.g. 5°C
AV:46 / 32862	10%	Energy management minimum flow in percentage of Design flow Rate.

State 5: Set Delta T control (heating water example)

NovoCon® S constantly overrides the DDC control signal when activated and maintains a constant temperature difference between the flow and return temperatures by opening and closing the valve. When the flow temperature increases/decreases, so will the calculated delta T set-point for the return temperature. This always ensures a constant delta T across the FCU irrespective of the flow temperature. This state may also be used in CO6 mode and will apply the appropriate value whilst in cooling/heating mode.
The constant delta T for heating is set in object / register AV:37 / 32836 and for cooling AV:38 / 32838.
Application example: Tempering a space (e.g. in storage hall) where we can set and keep a constant Delta T.

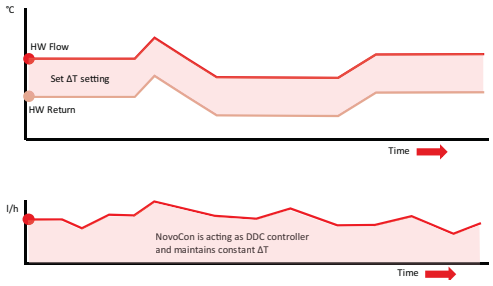

Object/ Register	Write/read value	Description
MSV:9 / 32810	Digital	NovoCon/AB-QM opening degree command via BUS
MSV:3 / 32802	Selected Valve Type	ISO valve selected = l/h, °C and kW. ANSI valve selected = GPM, °F and kBTU.
MSV:10 / 32811	Heating	Any control algorithms used are with AI:1>AI:2 in mind
AV:30 / 32796	250	Design flow setting of Heating e.g. 250 l/h
MSV:13 / 32815	Set Delta T control	Constantly ensures the flow and return temperature difference do not deviate from a specified value
AV:37 / 32836	Heating Delta T value	The delta T value that NovoCon will use as setpoint e.g. 20°C
AV:46 / 32862	10%	Energy management minimum flow in percentage of Design flow Rate.

When this limitation is active, the warning object BV:23 / bit 23 in register 33536 will be set to 'on'.

© Danfoss | 2023.01

Energy management
MSV:13 / 32815 *(continued)*

State 6: Return T limitation (chilled water example)
NovoCon® S ensures the min. return temp. which is set in register / object AV:40 / 32842.
This function will mainly be used for a Cooling application where the return temperature is higher than the flow temperature. NovoCon® S overrides the DDC control signal when activated and maintains a minimum return temperature by starting to close the valve when the user defined minimum return temperature is not achieved. When conditions allow for this limitation to be active, the warning object BV:23 / bit 23 in register 33536 will be set to 'on'.
Application example:
To improve chiller efficiency and ensure proper flow temperature for cooling systems, we can prescribe minimum return temperature to avoid COP reduction as well as low Delta T syndrome.

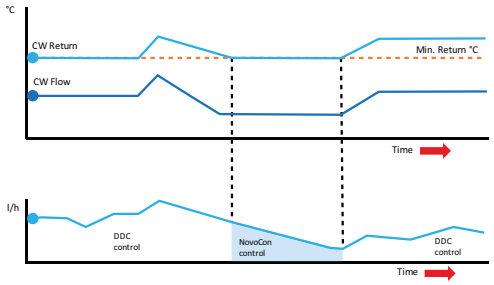

Object/ Register	Write/read value	Description
MSV:9 / 32810	Digital	NovoCon/AB-QM opening degree command via BUS
MSV:3 / 32802	Selected Valve Type	ISO valve selected = l/h, °C and kW. ANSI valve selected = GPM, °F and kBTU.
MSV:10 / 32811	Cooling	Any control algorithms used are with AI:1<AI:2 in mind
AV:31 / 32798	400	Design flow setting of Cooling e.g. 400 l/h
MSV:13 / 32815	Min. Return T limitation	Ensures the return temperature does not fall below a specified value
AV:40 / 32842	Cooling T2 value	The value that NovoCon will ensure T2 will not fall below e.g. 13°C
AV:46 / 32862	10%	Energy management minimum flow in percentage of Design flow Rate.

State 6: Return T limitation (heating water example)
NovoCon® S ensures the max return temp. set in register / object AV:39 / 32840.
This function will mainly be used for a Heating application where the return temperature is lower than the flow temperature. NovoCon® S overrides the DDC control signal when activated and maintains a maximum return temperature by starting to close the valve when the user defined maximum return temperature is not achieved. When conditions allow for this limitation to be active, the warning object BV:23 / bit 23 in register 33536 will be set to 'on' .
Application example: Heating systems that require a maximum return temperature for efficient heat source generation e.g. condensing boilers and heat pumps.

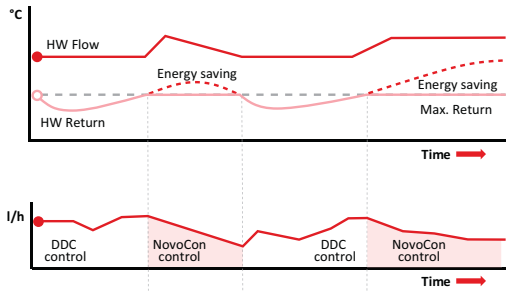

Object/ Register	Write/read value	Description
MSV:9 / 32810	Digital	NovoCon/AB-QM opening degree command via BUS
MSV:3 / 32802	Selected Valve Type	ISO valve selected = l/h, °C and kW. ANSI valve selected = GPM, °F and kBTU.
MSV:10 / 32811	Heating	Any control algorithms used are with AI:1>AI:2 in mind
AV:30 / 32796	250	Design flow setting of Heating e.g. 250 l/h
MSV:13 / 32815	Max. Return T limitation	Ensures the return temperature does not rise above a specified value
AV:39 / 32840	Heating T2 value	The value that NovoCon will ensure T2 will not rise above e.g. 60°C
AV:46 / 32862	10%	Energy management minimum flow in percentage of Design flow Rate.

State 7: Set Return T control (heating water example)
A constant return temperature T2 value is set in object / register AV:39 / 32840 (Heating) or AV:40 / 32842 (Cooling). NovoCon® S constantly overrides the DDC control signal and maintains a constant return temperature by opening and starting to close the valve when the user defined Return T is exceeded or not achieved. When the flow temperature increases/decreases, the Return T set-point remains the same. This will ensure a constant return temperature back to the energy source.
Application example: When we intend to use the return water for secondary usage e.g. pre-heat on a AHU or a standalone terminal unit in which the T2 value is used as the temperature set-point to be maintained.

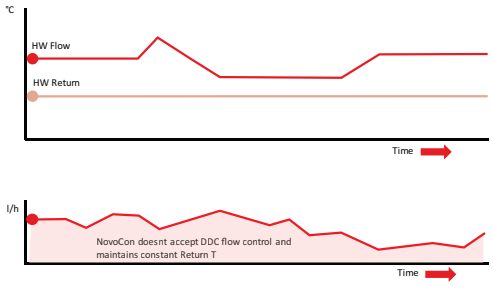

Object/ Register	Write/read value	Description
MSV:9 / 32810	Digital	NovoCon/AB-QM opening degree command via BUS
MSV:3 / 32802	Selected Valve Type	ISO valve selected = l/h, °C and kW. ANSI valve selected = GPM, °F and kBTU.
MSV:10 / 32811	Heating	Any control algorithms used are with AI:1>AI:2 in mind
AV:30 / 32796	250	Design flow setting of Heating e.g. 250 l/h
MSV:13 / 32815	Set Return T control	Constantly ensures the return temperature does not deviate from a specified value
AV:39 / 32840	Heating T2 value	The return T value that NovoCon will use as setpoint e.g. 40°C
AV:46 / 32862	10%	Energy management minimum flow in percentage of Design flow Rate.

Commissioning/connection of flow sensor to:

NovoCon® S

NovoCon® S supports connection of flow sensor directly to NovoCon® IO cable. Flow sensor must be connected to AI and AO terminal. NovoCon must be set to digital mode (MSV:9/32810 = 2), output functionality set to Inactive (BV:3/32817 = 0) and value of output (AO:0/33286 = 10) on 10 V. You also need to select AI (MSV: 41/32821) input for connecting flow sensor.

To get right flow sensor value it is very important to set right value of liters per pulse on NovoCon® (AV: 43/32864). Usually this is written on flow sensor specification sheet. If we would like to use flow sensor for calculating energy we must also set register MSV12/32814*.

AI

Cable NovoCon® I/O **SonoSensor 30**

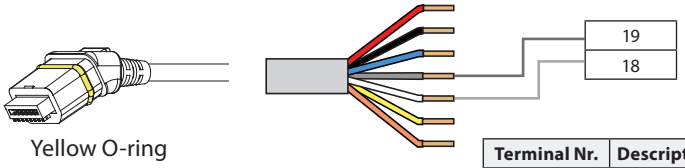

Yellow O-ring

Terminal Nr.	Description
18	Volume pulse output (+)
19	Ground (-)

Red Power 24V (in/out)
Black Power ground (in/out)
Blue Ground T1, T2 V/mA input & V output signal
Grey V/mA input signal
White V output signal
Yellow T1 or resistance input
Orange T2 or resistance input

Object/Register	Write/read value	Description
MSV:9 / 32810	2: Digital mode	Application mode
BV:3 / 32817	0: Inactive	Output feedback
AO:0 / 33286	10	Value on output
MSV:41 / 32821	3: Flow sensor	AI input
AV:43 / 32864	0.04 (depends on flow sensor)	Pulse volume (liter/pulse)
MSV:12 / 32814	3: ON, flow sensor on return pipe	Energy counting method*

*Energy counting method
MSV: 12 / 32814
State 1: Off
NovoCon® S is not calculating energy.
State 2: On, indicated flow
NovoCon® S is calculating energy based on temperature difference between T1 and T2 and using indicated flow.
State 3: On, flow sensor on return pipe
NovoCon® S is calculating energy based on temperature difference between T1 and T2 and using flow from flow sensor installed on return pipe.
State 4: On, flow sensor on supply pipe
NovoCon® S is calculating energy based on temperature difference between T1 and T2 and using flow from flow sensor installed on supply pipe.

 © Danfoss | 2023.01

Commissioning/connection of flow sensor to: *(continued)*

NovoCon® M

NovoCon® M supports connection of flow sensor directly to NovoCon® inputs. Flow sensor must be connected to T3 and GND terminal. NovoCon must be set to digital mode (MSV:9/32810 = 2). You also need to select T3 (MSV: 44/32821) input for connecting flow sensor.

To get right flow sensor value it is very important to set right value of liters per pulse on NovoCon® (AV: 43/32864). Usually this is written on flow sensor specification sheet. If we would like to use flow sensor for calculating energy we must also set register MSV12/32814*.

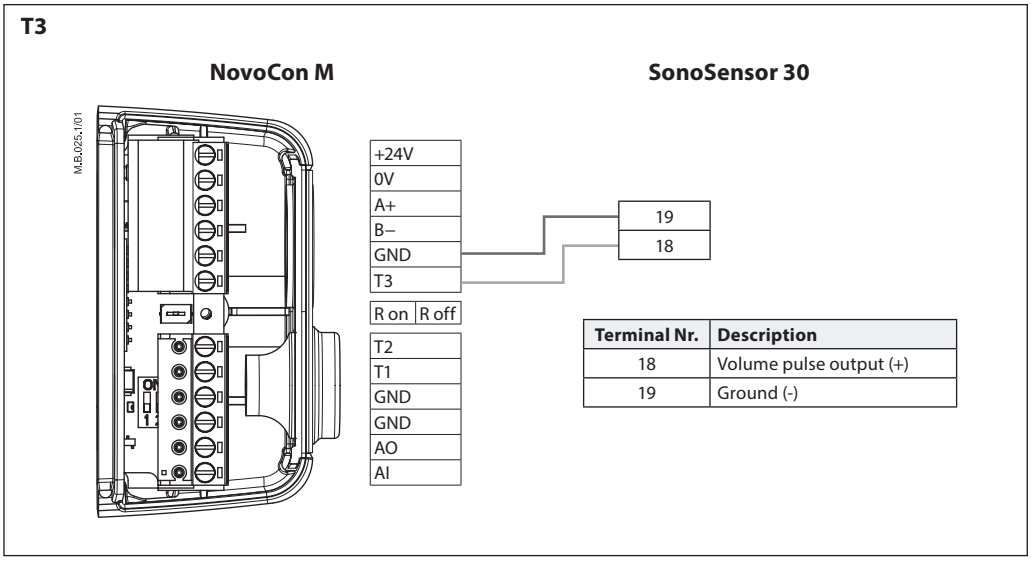

Object/Register	Write/read value	Description
MSV:41 / 32824	3: Flow sensor	T3 input
AV:43 / 32864	0.04 (depends on flow sensor)	Pulse volume (liter/pulse)
MSV:12 / 32814	3: ON, flow sensor on return pipe	Energy counting method*

*Energy counting method
MSV: 12 / 32814
State 1: Off
NovoCon® M is not calculating energy.
State 2: On, indicated flow
NovoCon® M is calculating energy based on temperature difference between T1 and T2 and using indicated flow.
State 3: On, flow sensor on return pipe
NovoCon® M is calculating energy based on temperature difference between T1 and T2 and using flow from flow sensor installed on return pipe.
State 4: On, flow sensor on supply pipe
NovoCon® M is calculating energy based on temperature difference between T1 and T2 and using flow from flow sensor installed on supply pipe.

Commissioning/connection of flow sensor to: *(continued)*

NovoCon® L, XL

NovoCon® L/XL supports connection of flow sensor directly to NovoCon® inputs. Flow sensor must be connected to T3 and GND terminal. NovoCon must be set to digital mode (MSV:9/32810 = 2). You also need to select T3 (MSV: 44/32821) input for connecting flow sensor.

To get right flow sensor value it is verry important to set right value of liters per pulse on NovoCon® (AV: 43/32864). Usually this is written on flow sensor specification sheet. If we would like to use flow sensor for calculating energy we must also change register MSV12/32814*.

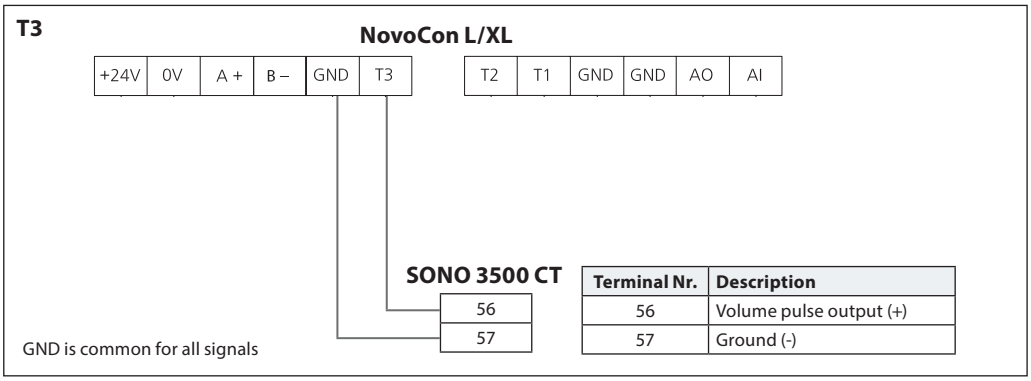

Terminal Nr.	Description
56	Volume pulse output (+)
57	Ground (-)

Object/Register	Write/read value	Description
MSV:41 / 32824	3: Flow sensor	T3 input
AV:43 / 32864	0,04 (depends on flow sensor)	Pulse volume (liter/pulse)
MSV:12 / 32814	3: ON, flow sensor on return pipe	Energy counting method*

***Energy counting method**
MSV: 12 / 32814
State 1: Off
NovoCon® L/XL is not calculating energy.
State 2: On, indicated flow
NovoCon® L/XL is calculating energy based on temperature difference between T1 and T2 and using indicated flow.
State 3: On, flow sensor on return pipe
NovoCon® L/XL is calculating energy based on temperature difference between T1 and T2 and using flow from flow sensor installed on return pipe.
State 4: On, flow sensor on supply pipe
NovoCon® L/XL is calculating energy based on temperature difference between T1 and T2 and using flow from flow sensor installed on supply pipe.

Settings connected to flow sensor (NovoCon S/M/L/XL):
If either T1 or T2 ohmic input terminal is used for flow sensor or disabled:
energy app can't be switched to power lim./control or delta temp. lim./control, but might be switched to return temp. lim./control.
The former depends whether if the return temperature function is selected on the other terminal, which is not used for flow sensor connection.

If analog input terminal function is used for flow sensor or disabled, the following application modes in MSV:9 are not available:
1: Analog control - AI used for control signal
3: CO6 mode - AI used for CO6 status
4: Inverted CO6 mode - AI used for CO6 status
7: Analog CO6 mode - AI used for control signal
8: Inverted analog CO6 mode - AI used for control signal
In other words, the MSV:9 can't be switched to "Analog control" or to the CO6 modes except mode 5&6 (CO6 without alarms).

If MSV:9 application mode is used in "Analog control" or in combination with CO6 except states 5 and 6 (CO6 without alarms):
The AI terminal function is locked to state 2 "Analog input (voltage or current)" and can't be changed.

 © Danfoss | 2023.01

Auto baud rate

NovoCon® should be connected after, or at the same time as, other devices. NovoCon® will then adapt to it's network's baud rate automatically.

Baud rate MSV:6 / 32804 must be set to 1 (default).
If the NovoCon® observes activity on the bus within 45 seconds after powering up, then it adopts the baud rate presently used on the network by other BACnet devices. If the actuator does not see activity on the network within this time, it generates a token and sends the token out at the default baud rate of 38400bps.

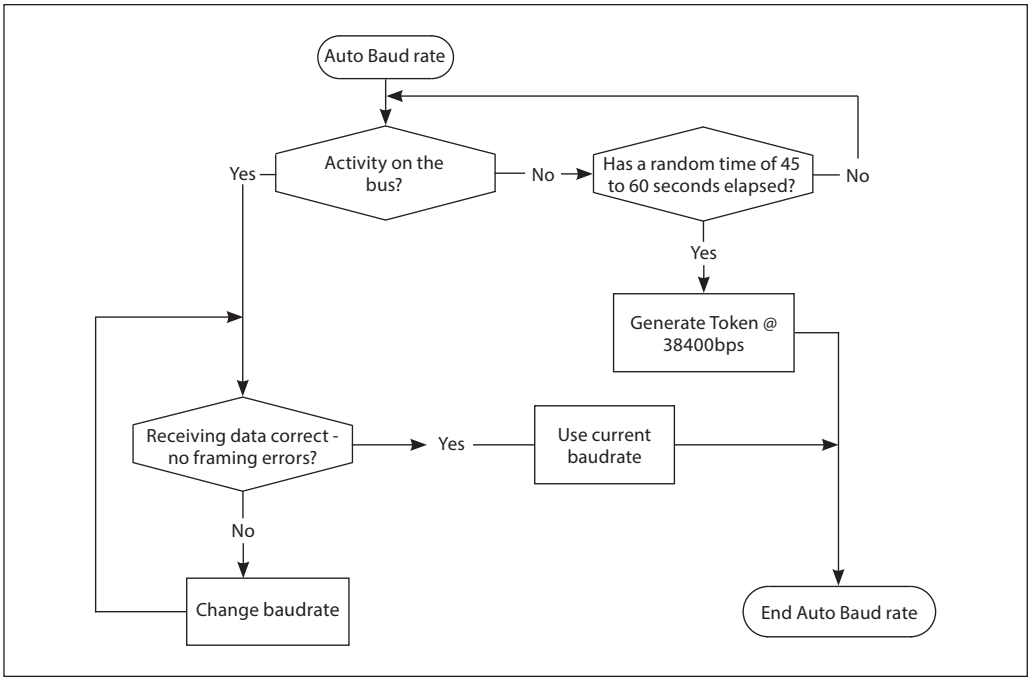

Auto MAC Addressing - BACnet only

MAC address assignment method MSV:5 must be set to 1 (default).
The NovoCon® actuator observes for occupied MAC addresses on the sub-network and then automatically assigns an available MAC address to the actuator only on first Power up. Assuming the address has not already been manually selected by DIP Switches. If a MAC address collision arises an Auto MAC addressing is enabled. This function will start the search for an available MAC address again. When an available MAC address is found, an “I-Am” notification will be sent out via BACnet.
Please note that consecutive MAC addresses may not always be assigned.

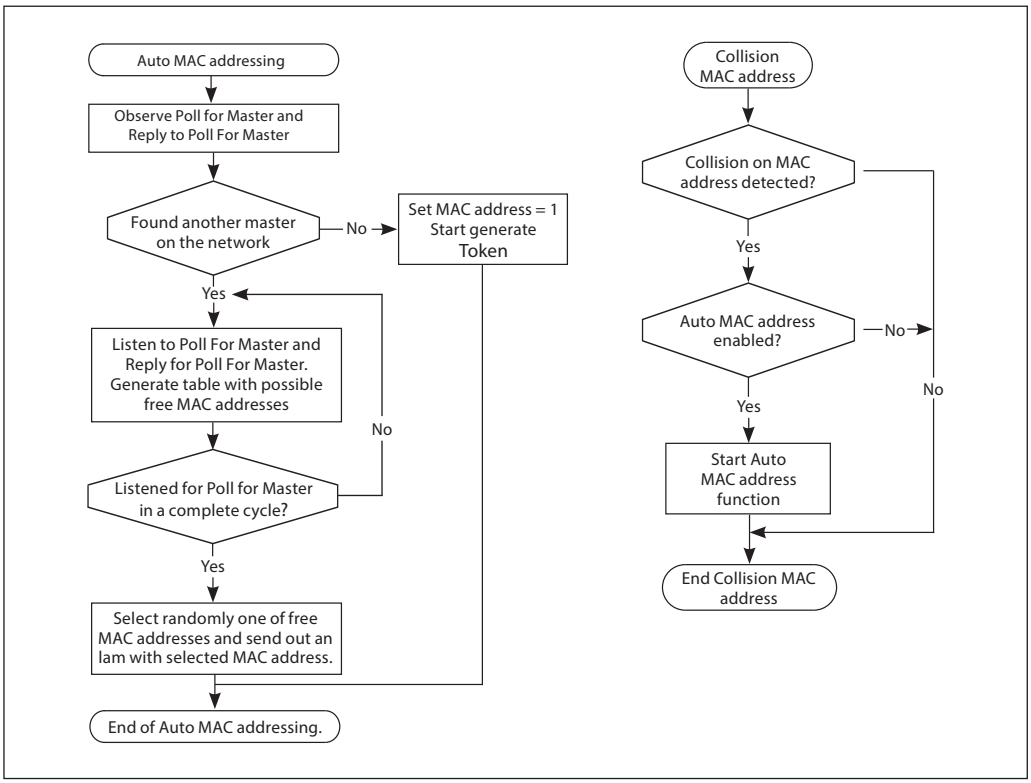

BACnet Objects - Analog Value

Ident	Object / Parameter name	Unit	Read/ Write	Min	Max	Default State	Resolution	Description	Persistent Yes/No
AV:0	**Design Flow Rate**	98: % 136: L/h 89: GPM	R/W	AB-QM 4.0 DN15-DN32: 10% of nominal flow AB-QM DN10-DN32: 20% of nominal flow AB-QM DN40-DN250: 40% of nominal flow	Setting Range Maximum from Valve table	Nominal value from the Valve table in L/h	0.1	Recommended to use AV:30 for Heating and/or AV:31 for cooling. Pre-set value for the Design Flow Rate when control signal is at 100%, if the Application mode is Analog or Digital control otherwise not used. Units can be changed via the object's engineering units property and/ or MSV:20. The units L/h (ISO valves) or GPM (ANSI valves) comes from the object MSV:3 Selected Valve type.	Yes
AV:1	**Flow Rate Setpoint**	98: % 136: L/h 89: GPM 48: kW 157: kBTU/h	R/W	0	100% or Design Flow value	100%	0.01	The Flow Rate Setpoint (max. flow rate) through the AB-QM valve. Units can be changed via the object's engineering units property and/or MSV: 21. In case the Energy management functions are active the Flow Rate Setpoint will follow the actual setting controlled by the Energy Management function. NOTE: For kW or kBTU/h to become active, MSV:13 Power Controller (state:3) must be chosen.	No
AV:2	**Flow Rate feedback**	%, L/h, GPM	R	0	If L/h (GPM) is selected then the valve flow rate is set to the selected valve's (MSV:3) maximum value. Otherwise 100%	L/h or GPM depending on the selected valve	0.001	Flow rate indication based on the position of the Actuator stem. Units can be changed via the object's engineering units property and/or MSV:22. This object is supported by COV.	No
AV:3	Control Fallback Time	72: Minutes	R/W	0	60	10	1	Time before actuator reacts to a missing analog control signal. i.e. when MSV:9=1 Analog control and not receiving an analog control signal.	Yes
AV:4	Alpha Value	95: No units	R/W	0.05	1.0	1.0	0.01	Value used for shaping the curve in Manual Defined Function (MDF) mode to fit the characteristic curve of a heat exchanger. Linear setting: MDF=1.See curve below table. If AV:1 is in L/h in Digital mode, the alpha setting is ignored. See Alpha value diagram.	Yes
AV:5	Valve closing or opening time	73: Seconds	R/W	18	700	na	1	The time the actuator needs to move from 0% to 100% of Design Flow Rate. Use with MSV:4.	Yes
AV:6	Voltage of internal power supply	Volts	R	12	50	na	0.01	Rectified voltage which powers the actuator. Too low voltage: 16.1-17.5V. Too high voltage: 38.3-43.4V. Used to check power booster numbers in the layout.	No
AV:7	MAC Address	95: No units	R/W	1	126	na	1	MAC Address used for BACnet communication.	Yes
AV:8	Temperature in the Actuator	°C, °F	R	-20	100	°C	0.5	Temperature measured inside the actuator. Units can be changed via the object's engineering units property.	No
AV:9	Total Operating Hours	Hours	R	0	MAX	na	1	Total Operating Hours of the actuator.	Yes
AV:10	Minutes since last power-up	Minutes	R	0	MAX	na	1	Minutes since the last power-up of the actuator.	No
AV:11	Minutes since last calibration	Minutes	R	0	MAX	na	1	Minutes since the last time the actuator was calibrated to an AB-QM valve.	Yes
AV:12	Minutes since fully closed	Minutes	R	0	MAX	na	1	Minutes since the last time the AB-QM valve was fully closed.	Yes
AV:13	Minutes Since fully Opened	Minutes	R	0	MAX	na	1	Minutes since the last time the AB-QM valve was fully opened.	Yes
AV:14	Lifetime estimate	na	R	0	MAX	na	0.01	Calculated percentage of expended lifetime. At 100% the valve and actuator have reached the estimated minimum lifetime. Replacement of valve and actuator is recommended.	Yes
AV:15	Server Message Count	na	R	0	MAX	na	1	Server Message Count	No
AV:16	Server Message Received	na	R	0	MAX	na	1	Server Message Received	No
AV:17	Server Error Count	na	R	0	MAX	na	1	Server Error Count	No
AV:18	Server Message sent	na	R	0	MAX	na	1	Server Message sent	No
AV:19	Server Timeout Error	na	R	0	MAX	na	1	Server Timeout Error	No
AV:20	Serial Number of the actuator	na	R	na	na	na	1	Description of this object holds the serial number of the actuator - programmed at the time of production.	na
AV:21	The name of the Selected valve is shown here	L/h or GPM, Unit type comes from MSV:3 Selected Valve Type	R	na	na	na	1	Nominal flow of the selected AB-QM valve is shown in the present value.	na
AV:22	Valve position at nominal flow	Millimetre	R	na	na	na	1	Position in mm for nominal flow of the selected AB-QM valve.	na
AV:23	Maximum value for the Design Flow Rate	%	R	na	Setting Range Maximum from Valve table	%	1	Maximum level the Design Flow Rate can be increased to for the selected AB-QM valve.	na
AV:24	The name of the User Defined Valve is shown here	136: L/h or 89: GPM. Unit type written here is copied to the Valve Table. Default: L/h	R/W	1	NovoCon S: 5000 NovoCon M: 90000 NovoCon L/XL:	600	0.1	Name and Nominal Flow for the User Defined Valve. This Object is used only if NovoCon® is not used with an AB-QM valve. Please contact your Danfoss representative to verify if the desired connection is possible.	Yes
AV:25	Valve position at nominal flow for User Defined Valve	30: Millimetre	R/W	1.5	5.8	4	0.01	Position in mm for nominal flow of the User Defined Valve. This Object is used only if NovoCon® is not used with an AB-QM valve. Please contact your Danfoss representative to verify if the desired connection is possible.	Yes
AV:26	Maximum value for the Design Flow in the User Defined Valve	98: %	R/W	100	150	100	1	Maximum level the Design Flow can be increased to for the User Defined Valve. This Object is used only if NovoCon® is not used with an AB-QM valve. Please contact your Danfoss representative to verify if the desired connection is possible.	Yes
AV:27	Alarm summary count	No units	R	na	na	0	na	Numerical overview about pending errors detected. Coding for AV:27 Alarm summary count is: If BV:10 is active then AV:27 is 1.0. If BV:11 is active then AV:27 is 2.0. If BV:12 is active then AV:27 is 4.0. If BV:13 is active then AV:27 is 8.0. If BV:14 is active then AV:27 is 16.0. If BV:15 is active then AV:27 is 32.0. If BV:16 is active then AV:27 is 64.0. If BV:17 is active then AV:27 is 128.0. If BV:18 is active then AV:27 is 256.0. If BV:19 is active then AV:27 is 512.0. If BV:20 is active then AV:27 is 1024.0. If BV:21 is active then AV:27 is 2048.0. If BV:22 is active then AV:27 is 4096.0. If BV:23 is active then AV:27 is 8192.0. If BV:24 is active then AV:27 is 16384.0. If BV:25 is active then AV:27 is 32768.0. If BV:26 is active then AV:27 is 65536.0. e.g. if both BV:11 & BV:12 are active then AV:27 is 6.0. This object is supported by COV	No
AV:30	**Heating Design Flow Rate**	98: % 136: L/h 89: GPM	R/W	AB-QM 4.0 DN15-DN32: 10% of nominal flow AB-QM DN10-DN32: 20% of nominal flow AB-QM DN40-DN250: 40% of nominal flow	Setting Range Maximum from Valve table	Nominal value from the Valve table in L/h	0.1	Pre-set value for the Design Flow Rate in heating mode, when the control signal is at 100%. MSV:10 must be set to Heating. The units L/h (ISO valves) or GPM (ANSI valves) comes from the object MSV:3 Selected Valve type	Yes
AV:31	**Cooling Design Flow Rate**	98: % 136: L/h 89: GPM	R/W	AB-QM 4.0 DN15-DN32: 10% of nominal flow AB-QM DN10-DN32: 20% of nominal flow AB-QM DN40-DN250: 40% of nominal flow	Setting Range Maximum from Valve table	Nominal value from the Valve table in L/h	0.1	Pre-set value for the Design Flow Rate in cooling mode, when the control signal is at 100%. MSV:10 must be set to Cooling. The units L/h (ISO valves) or GPM (ANSI valves) comes from the object MSV:3 Selected Valve type.	Yes
AV:32	**Power emission**	48: kW 157: kBTU/h	R	0	na	na	0.01	The hydronic power emission of the terminal unit, based on calculations from water flow rate and the temperature difference between supply (AI:1) and return (AI:2) pipes. If AV:41 Glycol correction is used, Power emission will be adjusted accordingly. Units can be changed via the object's engineering units property.	No

© Danfoss | 2023.01

BACnet Objects - Analog Value *(continued)*

Ident	Object / Parameter name	Unit	Read/ Write	Min	Max	Default State	Description	Information	Persistent Yes/No
AV:33	Heating Energy counter	19: kWh 126: MJ 147: kBTU	R	0	na	na	Accumulative Energy counter for heating.	Activated/Deactivated via MSV:12. Units set via MSV:27. If AV:41 Glycol correction is used, Heating Energy counter will be adjusted accordingly.	Yes
AV:34	Cooling Energy counter	19: kWh 126: MJ 147: kBTU	R	0	na	na	Accumulative Energy counter for cooling.	Activated/Deactivated via MSV:12. Units set via MSV:27. If AV:41 Glycol correction is used, Cooling Energy counter will be adjusted accordingly.	Yes
AV:35	Heating max. Power	48: kW 157: kBTU/h	R/W	0	na	0	Pre-set value for the design flow rate, in heating mode.	When using MSV:13 state Power limiter this is the maximum allowed hydronic energy output. This value is intended to limit the heating power through the terminal unit.	Yes
AV:36	Cooling max. power	48: kW 157: kBTU/h	R/W	0	na	0	Pre-set value for the design flow rate, in cooling mode.	When using MSV:13 state Power limiter this is the maximum allowed hydronic energy output. This value is intended to limit the cooling power through the terminal unit.	Yes
AV:37	Heating Delta T	62: °C 64 °F	R/W	na	na	15	Set-point value for the temperature difference between the flow and return pipes	For MSV:13 state Min. delta T management and Set Delta T control, this is the value the control is based on for heating.	Yes
AV:38	Cooling Delta T	62: °C 64 °F	R/W	na	na	5	Set-point value for the temperature difference between the flow and return pipes	For MSV:13 state Min. delta T management and Set Delta T control, this is the value the control is based on for cooling.	Yes
AV:39	Heating T2	62: °C 64 °F	R/W	na	na	35	Set-point value for Heating T2 (Heating return pipe temperature)	For MSV:13 state Max. Return T management and Set return T control, this is the value the control is based on for heating.	Yes
AV:40	Cooling T2	62: °C 64 °F	R/W	na	na	13	Set-point value for Cooling T2 (Cooling return pipe temperature)	For MSV:13 state Min. Return T management and Set return T control, this is the value the control is based on for cooling.	Yes
AV:41	Glycol Factor	95: No units	R/W	0.5	2	1	Glycol correction factor	Select appropriate factor from 0.5-2 if a glycol mixture is used.	Yes
AV:42	Position feedback	98: %	R	0	100	na	Position of the Actuator stem in percentage	Flow rate indication in percentage based on the position of the Actuator stem.	No
AV: 43	Pulse volume	Litre/pulse (l/p)	R/W	0	na	0	Pulse volume of connected flow sensor	Adapts automatically to the selected AB-QM valve, but can be overwritten manually. If set to 0 NovoCon only count pulses and do not perform flow measurements based on received pulses. This can be used to connect e.g. water meter or energy meter.	Yes
AV: 44	Volume counter	m3	R	0	na	0	Total accumulated water volume	Total accumulated water volume passed through the valve, combined from both heating and cooling	Yes
AV: 45	Pulse counter	pulse	R	0	na	0	Total accumulated number of pulses	Total accumulated number of pulses received from flow sensor	Yes
AV:46	Energy management min flow	98: %	R/W	0	100	10	Energy management minimum flow in percentage of AV:30 or AV:31 Design flow rate.	Minimum allowed flow while the Energy management function MSV:13 is active. Exceptions, the object has no effect if: The energy limitation is inactive or the Power control energy mgmt. function is selected. In this case, the min. flow limit is set to 2% of the Design flow rate.	Yes
AV:47	Control-Gain P	95: No units	R/W	na	na	7	Set proportional part for control	Sets the proportional part for control of the object MSV:13 Energy management functions.	Yes
AV:48	Control-Gain I	95: No units	R/W	na	na	0.35	Set integral part for control	Sets the integral part for control of the object MSV:13 Energy management functions. I parameter in sec. = (Pgain / Igain) * 2 sec. Default: 7/0.35 * 2sec. = 40 sec.	Yes
AV:50*	Analog CO6 Heating point 100%	95: No units	R/W	0	10	0	Signal point for Analog CO6 mode	The control signal for heating 100% open when MSV:9 = State 7 or 8. Overlaping heating and cooling control curves are not accepted.	Yes
AV:51*	Analog CO6 Heating point 0%	95: No units	R/W	0	10	3.3	Signal point for Analog CO6 mode	The control signal for heating 0% open when MSV:9 = State 7 or 8. Overlaping heating and cooling control curves are not accepted.	Yes
AV:52*	Analog CO6 Cooling point 0%	95: No units	R/W	0	10	6.7	Signal point for Analog CO6 mode	The control signal for cooling 0% open when MSV:9 = State 7 or 8. Overlaping heating and cooling control curves are not accepted.	Yes
AV:53*	Analog CO6 Cooling point 100%	95: No units	R/W	0	10	10	Signal point for Analog CO6 mode	The control signal for cooling 100% open when MSV:9 = State 7 or 8. Overlaping heating and cooling control curves are not accepted.	Yes

** Only for NovoCon S*

AV:4 / 32772 Alpha Value Curve

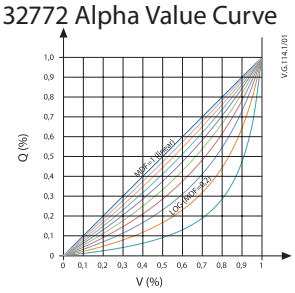

BV:2 / 32786 Direct or Inverse operation mode

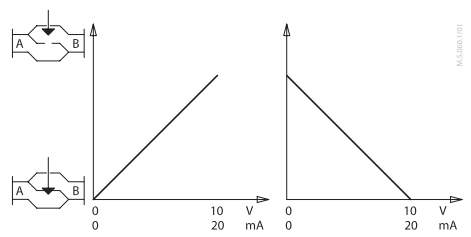

BACnet Objects - Multi State Value

Ident	Object / Parameter name	Read/ Write	State Text		Default State	Description	Persistent Yes/No
MSV:0	**Actuator Mode and special features**	R/W	1: Normal 2: Calibration 3: Flush [1]	4: De-Air [2] 5: Alarm	1: Normal	Shows present mode of actuator. Calibration, flushing and de-air may be started from here.	Yes, except state 3,4 & 5
MSV:1	Analog Control signal type and range	R/W	1: 0-5 VDC 2: 0-10 VDC 3: 2-10 VDC 4: 5-10 VDC	5: 2-6 VDC 6: 6-10 VDC 7: 0-20 mA 8: 4-20 mA	2: 0-10 VDC	Used to select the analog control signal input type and range.	Yes
MSV:2	Missing Control Signal Fallback Action	R/W	1: No action 2: CLOSE 3: OPEN 4: 50% of Design Flow		1: No action	The action that the actuator will commence upon a missing analog control signal when MSV:9=1.	Yes
MSV:3	**Selected Valve Type**	R/W	See table "Valve Type Selection"		Related to NovoCon type	This is the AB-QM valve type that the actuator is set-up to control.	Yes
MSV:4	Actuator Speed	R/W	1: 3 sec/mm 2: 6 sec/mm 3: 12 sec/mm	4: 24 sec/mm 5: Constant Time	4: 24 sec/mm	The amount of time the actuator takes to move 1mm or alternatively, a specified constant time function (see AV:5). The Constant Time value range is 18-700 seconds.	Yes
MSV:5	MAC Address assignment method	R/W	1: DIP Switch Settings or Auto Addressing 2: User configuration over BACnet or Auto Addressing		1: DIP Switch Settings or Auto Addressing	Method used to set the BACnet MAC address. If the MAC address is not set by DIP Switch, the actuator will automatically assign itself an available MAC address.	Yes
MSV:6	Baud Rate	R/W	1: Auto Baud Rate Detection 2: 9600 bps 3: 19200 bps 4: 38400 bps 5: 57600 bps 6: 76800 bps 7: 115200 bps		1: Auto Baud Rate Detection	Baud Rate used for BACnet communication.	Yes
MSV:7	LED Control	R/W	1: Normal LED mode 2: Show alarms only 3: All LED's OFF 4: Blink		1: Normal LED mode	Used to select the LED display required.	Yes

[1] Opens the valve fully for one hour or until a new state is selected
[2] Opens and closes the valve 5 times at maximum speed

BACnet Objects - Multi State Value *(continued)*

Ident	Object / Parameter name	Read/ Write	State Text	Default State	Description	Persistent Yes/No
MSV:8	Select field bus protocol	R/W	1: DIP switch 2: BACnet 3: Modbus	1: DIP switch	Selection of field bus protocol. See also the DIP Switch Settings section of the data sheet. When the protocol is changed, a power cycle is required to make the actuator adopt the newly selected protocol.	Yes
MSV:9	**Application mode**	R/W	1: Analog control 2: Digital control 3: CO6 mode* 4: Inverted CO6 mode* 5: CO6 without alarms* 6: Inverted CO6 without alarms* 7: Analog CO6 mode* 8: Analog inverted CO6 mode*	2: Digital control	Select the actuator application mode. **State 1:** Analog Control. Flow is controlled with an analog signal e.g. 0-10V. Design Flow Rate set via AV:30 Heating and/or AV:31 Cooling. Alternative AV:0 can be used. **State 2:** Digital Control. AV:1 is used to control the flow. Design Flow Rate set via AV:30 Heating and/or AV:31 Cooling. Alternative AV:0 can be used. **State 3*:** CO6 mode. AV:1 is used to control the flow. Heating Design Flow Rate set via AV:30 and AV:31 for Cooling Design Flow Rate. Heating is connected to the CO6 valve to ports 5 & 6 and cooling to ports 1 & 4. **State 4*:** Inverted CO6 mode. AV:1 is used to control the flow. Heating Design Flow Rate set via AV:30 and AV:31 for Cooling Design Flow Rate. Ports are inverted in relation to State 3. **State 5*:** CO6 without alarms. AV:1 is used to control the flow. Heating Design Flow Rate set via AV:30 and AV:31 for Cooling Design Flow Rate. This state may be used if the Analog Input is required to be used other than CO6 feedback. Be aware that in this state the status for the CO6 valve is not shown. **State 6*:** Inverted CO6 without alarms. AV:1 is used to control the flow. Heating Design Flow Rate set via AV:30 and AV:31 for Cooling Design Flow Rate. Ports are inverted in relation to State 3. This state may be used if the Analog Input is required to be used other than CO6 feedback. Be aware that in this state the status for the CO6 valve is not shown. **State 7*:** Analog CO6 mode. The flow is controlled from the Room controller via the analog input signal. Heating Design Flow Rate set via AV:30 and AV:31 for Cooling Design Flow Rate. BV:2 is in this case used to switch the control signal. Be aware that in this state the status for the CO6 valve is not shown. **State 8*:** Analog inverted CO6 mode. The flow is controlled from the Room controller via the analog input signal. Heating Design Flow Rate set via AV:30 and AV:31 for Cooling Design Flow Rate. In this state the Cooling and heating is connected opposite of state 7. When changing to this state the values in AV:50-53 are reversed. BV:2 is in this case used to switch the control signal. Be aware that in this state the status for the CO6 valve is not shown.	Yes
MSV:10	Application command & status	R/W (1-4) R (5-8)	1: Heating 2: Cooling 3: CO6 Shut Off *[1] 4: CO6 Start exercise* 5: CO6 Moving towards Cooling* 6: CO6 Moving towards Heating* 7: CO6 Alarm* 8: CO6 Exercising*	1: Heating	States 1 to 4 are commands for the Actuator NovoCon® ChangeOver[6] and impact Energy management Application MSV:13. States 5 to 8 are feedback from the Actuator NovoCon® ChangeOver[6]. **State 3, shut-off mode may only be used for maintenance and is only possible when the Flow Rate Setpoint is 0%.** In Central ChangeOver applications, state 1 and 2 are used to command heating or cooling.	Yes
MSV:11*	CO6 auto exercise	R/W	1: ON 2: OFF	1: ON	ON: The ChangeOver[6] valve will be moved from current position to shut off and back again once per week to maintain free movement, if CO6 mode is selected. OFF: Exercising the valve should be handled by BMS.	Yes
MSV:12	Energy counting method	R/W	1: Off 2: On, indicated flow 3: On, flow sensor on return pipe 4: On, flow sensor on supply pipe	1: Off	**State 1:** Off NovoCon® is not calculating energy. **State 2:** On, indicated flow NovoCon® is calculating energy based on temperature difference between T1 and T2 and using indicated flow. **State 3:** On, flow sensor on return pipe NovoCon® is calculating energy based on temperature difference between T1 and T2 and using flow from flow sensor installed on return pipe. **State 4:** On, flow sensor on supply pipe NovoCon® is calculating energy based on temperature difference between T1 and T2 and using flow from flow sensor installed on supply pipe.	Yes
MSV:13	Energy management	R/W	1: Not active **Power Manager:** 2: Power limitation 3: Power control **Delta T Manager:** 4: Min. Delta T limitation 5: Set Delta T control 6: Return T limitation 7: Set Return T control	1: Not used	Activate functions to optimize system performance. The calculated flow from the activated energy functions is limited to AV:46 Energy management min flow, except the function Power control that has a limitation at min. 2% of the Design Flow Rate. If needed the PI values can be fine tuned in objects AV:47 and AV:48. **State 1:** Not active **State 2:** If power is above the set value in AV:35/36, NovoCon will regulate to the specified limit AV:35 and/or AV:36. When this limitation is active, the warning BV:23 will be set to 'on'. **State 3:** The flowrate through the valve is controlled by AV:1 in %, kW or kBTU/h (selected in MSV:26) and is based on the flowrate and temperature inputs. **State 4:** If delta T value in AV:37 and/or AV:38 is exceeded, NovoCon will begin to close the valve until the AV:37 and/or AV:38 values are reached. When this limitation is active, the warning BV:23 will be set to 'on'. **State 5:** The constant delta T is set in AV:37 and/or AV:38 and NovoCon will regulate within these limits. When this control is active, the warning BV:23 will be set to 'on'. **State 6:** NovoCon ensures the min. or max. return temp. T2 set in AV:39 & AV:40. In MSV:10 / 32811 Heating/cooling application must be selected. When this limitation is active, the warning BV:23 will be set to 'on'. **State 7:** A constant T2 value is set in AV:39 and/or AV:40. NovoCon will regulate to maintain these values constant.	Yes
MSV:14	T1, T2 temperature sensor type	R/W	Select temperature sensor type: 1: NTC10k Type 2 2: NTC10k Type 3 3: Pt1000 4: PT500** 5: PT100**	3: Pt1000	Select the type of Temperature sensor connected to T1 and T2.	Yes
MSV:15**	T3 temperature sensor type	R/W	Select temperature sensor type: 1: NTC10k Type 2 2: NTC10k Type 3 3: Pt1000 4: PT500 5: PT100	3: Pt1000	Select the type of Temperature sensor connected to T3	Yes
MSV:20	Units of Design Flow Rate	R/W	1: L/h 2: % 3: GPM	1: L/h	Engineering Units used for the Design Flow AV:0, AV:30 and AV:31	Yes
MSV:21	Units of Flow Rate Setpoint	R/W	1: L/h 2: % 3: GPM 4: kW 5: kBTU/h	2: %	Engineering Units used for the desired Flow AV:1. NOTE: If kW or kBTU/h chosen then MSV:13 Power Controller (state:3) also becomes active	Yes
MSV:22	Units of Actual Flow feedback	R/W	1: L/h 2: % 3: GPM	1: L/h	Engineering Units used for AV:2	Yes
MSV:23	Units of Temperature	R/W	1: °C 2: °F	1: °C	Engineering Units used for AV:8, AV:37-40	Yes
MSV:24	Units of T1	R/W	1: °C 2: °F 3: Ohm	1: °C	Engineering Units used for AI:1	Yes
MSV:25	Units of T2	R/W	1: °C 2: °F 3: Ohm	1: °C	Engineering Units used for AI:2	Yes
MSV:26	Units of Power	R/W	1: kW 2: kBTU/h	1: kW	Engineering Units used for AV:32	Yes
MSV:27	Units of Energy counter	R/W	1: kWh 2: MJ 3: kBTU	1: kWh	Engineering Units used for AV:33 and AV:34	Yes
MSV:28**	Units of T3	R/W	1: °C 2: °F 3: Ohm	1: °C	Engineering Units used for AI:3	Yes
MSV: 41	AI input	R/W	1: Disabled 2: Analog input (voltage/current) 3: Flow sensor***	2: Analog input	Different options for analog input terminal	Yes
MSV: 42	T1 input	R/W	1: Disabled 2: Supply temperature 3: Return temperature 4: Flow sensor	2: Supply temp.	Different options for T1 terminal If MSV:24 is on value 3, then value is for resistance, not temperature.	Yes
MSV: 43	T2 input	R/W	1: Disabled 2: Supply temperature 3: Return temperature 4: Flow sensor	3: Return temp.	Different options for T2 terminal If MSV:25 is on value 3, then value is for resistance, not temperature.	Yes
MSV: 44**	T3 input	R/W	1: Disabled 2: Control temperature 3: Flow sensor	2: Control temp.	Different options for T3 terminal If MSV:27 is on value 3, then value is for resistance, not temperature.	Yes

** Only for NovoCon S*
*** Only for NovoCon M, L/XL*
**** Not suitable for SONO 3500 CT!*

[1] A zero Flow Rate Setpoint command (AV:1) closes the AB-QM, so that there is neither heating nor cooling. Do not use the CO6 maintenance shut-off function for this purpose.

The CO6 valve shut-off function should only be used for maintenance and only when the water temperature in terminal unit is equal to ambient temperature or the terminal unit is not mounted. A water temperature change inside of a closed coil could result in rising pressure and possible damage of to the terminal unit.

© Danfoss | 2023.01

BACnet Objects - Binary Value

Ident	Object / Parameter name	Read/ Write	Active Text (1)	Inactive Text (0)	Default State	Description	Persistent Yes/No
BV:2	Direct or Inverse operation Mode	R/W	Inverse	Direct	Direct	Selection between Direct and Inverse operation mode. See Direct/Inverse diagram. For the states Analog CO6 mode and Inverted Analog CO6 mode this object is used to switch the control signal.	Yes
BV:3	Analog feedback signal	R/W	Active	Inactive	Inactive	By activating this feature, the analog output signal (AO:0) and the position of the valve opening become linked. The voltage output type and range is linked to the MSV:1 present value. This feature may be used for FCU fan control for example and is only made available when MSV:9 Application Mode are in State 1: Analog control or State 2: Digital control. If BV:3 is active and the analog output signal (AO:0) is written to manually it must be relinquished i.e. write "NULL" to return to the original setting of BV:3.	Yes
BV:10	Warning: Temperature of the actuator is out of recommended range	R	ON	OFF	na	The Temperature inside the Actuator is out of the recommended range.	No
BV:11	Alarm: No Control Signal	R	ON	OFF	na	The actuator has detected that it has no analog control signal.	No
BV:12	Alarm: Error during Closing	R	ON	OFF	na	The actuator is unable to reach it's intended closing position. Check for valve blockages.	No
BV:13	Warning: Pre-set Conflict	R	ON	OFF	na	Conflict between the Mechanical AB-QM valve setting and the NovoCon®. The mechanical valve setting must be 100% or above. The warning will also be activated if the Selected Valve Type has different stroke than the actually valve used validated during calibration.	No
BV:14	Warning: Voltage of power supply is too high	R	ON	OFF	na	Voltage of power supply is measured to be too high. When the measured voltage exceeds 43.4V the alarm will be turned ON for too high voltage. When the measured voltage is once more below 38.3V, the alarm will be turned OFF.	No
BV:15	Warning: Voltage of power supply is too low	R	ON	OFF	na	Voltage of power supply is measured to be too low. If voltage drops below 14.5V (NovoCon S) or 19.0 (NovoCon M/L/XL), alarm is activated. If voltage drops below 14.0V (NovoCon S) or 13.0 (NovoCon M/L/XL), alarm is activated and motor disabled. If voltage goes above 15.5V (NovoCon S) or 18.2V (NovoCon M/L/XL), alarm deactivates and motor is enabled.	No
BV:16	Alarm: Error during Calibration	R	ON	OFF	na	There was an error during calibration of the actuator. E.g. the NovoCon® actuator is not mounted on the valve or the valve is stuck.	No
BV:17	Warning: BACnet MAC-address Conflict was Detected	R	ON	OFF	na	Two or more devices on the same BACnet sub-network have the same MAC-address.	No
BV:18	Warning: Faults on the BACnet was detected	R	ON	OFF	na	Problems with communication on the network are detected.	No
BV:19	Alarm: An internal Error has been detected	R	ON	OFF	na	Re-calibrate or power cycle actuator to reset - actuator replacement may be necessary	No
BV:20*	Alarm: CO6 in manual override or CO6 unable to move	R	ON	OFF	na	ChangeOver[6] actuator is in manual override or is unable to reach position. When the reason for the alarm is removed it may take up to 2 minutes before the alarm is cleared.	No
BV:21*	Alarm: CO6 actuator not connected or damaged	R	ON	OFF	na	The ChangeOver[6] actuator is not connected or is damaged.	No
BV:22	Warning: Temp. sensors are missing or interchanged	R	ON	OFF	na	Temp. sensors are missing or interchanged	No
BV:23	Warning: Energy limitation is active	R	ON	OFF	na	Limitation is active. E.g. Power limitation, min. delta T or min/max return T management limitation.	No
BV:24	Warning: Energy management controller out of range	R	ON	OFF	na	Power, delta T or return T setpoint out of range or the setpoint can't be achieved. Action: Check that setpoint is achievable with the given flow rates and temperatures.	No
BV: 25	Warning: Flow out of expectations	R	ON	OFF	na	Warning for lower or higher flow than expected	No
BV: 26	Warning: No flow detected	R	ON	OFF	na	No flow detected with flow sensor	No

* *Only for NovoCon S*

BACnet Objects - Device Object

List with some selected important Device Object properties.

Property	Value	Read/ Write	Description	Persistent Yes/No
Object ID	Instance Range: 0 to 4194302	R/W	This property is normally called Device Instance number or Unique ID.	Yes
Object-Name	Combination of "NovoCon" + Type and Object ID	R/W	Product name. Max. 25 characters.	Yes
Firmware revision	Current firmware version	R	BACnet software revision.	Yes
Application S/W version	Current Application SW version	R	Actuator Application Software version.	Yes
Location	This string is empty when actuator is new.	R/W	Free text can be used to describe location etc. Max. 50 characters.	Yes
Description	Danfoss NovoCon actuator with BACnet MS/TP	R/W	Product description. Max. 50 characters.	Yes
Segmentation-supported	SEGMENTATION	R	Able to transmit and receive segmented messages.	Yes
Max-master	Default: 127 Range: 0-127	R/W	The MAX_master setting in NovoCon® can be set above the highest used MAC address in the MS/TP sub network.	Yes
Max ADPU length	480	R	Maximum allowed ADPU length.	Yes
Max segments accepted	5	R	Max segments accepted	Yes

BACnet Objects - Analog Input

Ident	Object / Parameter name	Unit	Read / Write	Min	Max	Default units	Description	Persistent Yes/No
AI:0	Voltage or Current on analog input	5: Volts 2: mA	R	0	10V 20mA	Volts	Voltage(V) or Current(mA) level on the analog control input, measured by the actuator. Units comes from MSV:1 Analog Control signal type and range. This object is supported by COV. In CO6 modes mA cannot be selected.	No
AI:1	T1 value	62: °C 64: °F, 4: Ohms	R	-10°C 10°F 900Ω	120°C 250°F 10kΩ	°C	Temperature/resistance measured from connected sensors. For Power emission AV:32, AI:1 is temperature on the flow pipe and AI:2 is temperature on the return pipe. When used as potential free contacts: Closed circuit <900Ω, open circuit 100kΩ. Recommended max. cable length 3m. Units can be changed via the object's engineering units property or via objects MSV:24 and MSV:25. The upper temperature limit for NTC 10k Type 2 sensors is 90°C/194°F. The upper temperature limit for NTC sensor 10k Type 3 is 95°C/203°F. This object is supported by COV.	No
AI:2	T2 value							
AI:3**	T3 value							

BACnet Objects - Analog Output

Ident	Object / Parameter name	Unit	Read / Write	Min	Max	Default units	Description	Persistent Yes/No
AO:0	Voltage on analog output	Volts	R/W	0	10	Volt	Output Voltage value. Note: In CO6 modes the present value is not writeable.	No

BACnet Objects - Notification class

Ident	Object / Parameter name	Description
NC:0	Alarm Notifier, Subscribe here for alarms	Subscribe devices for receiving alarms

NC:0 is an object where other BACnet devices can subscribe to be informed directly from this device if an alarm or warning is activated or cleared. A maximum of 4 devices can subscribe to this service. Subscribers of this object will be informed if any of the Warning or Alarms BV:10 to BV:24 is activated or cleared.

When the notification class NC:0 is going to be used to notify about changes with status of Warnings and Alarms (BV:10 – BV24), is it necessary to subscribe for notifications for the entire day and week: From 00:00:00:00 to 23:59:59:99 and all 7 days of the week. This is because the actuator does not have a clock built in and will therefore not be able to handle notifications with respect to time.

BACnet Objects - Averaging

Ident	Object / Parameter name	Min. Value	Average value	Max. Value	Window Interval	Window Sample	Description	Persistent Yes/No
AVO:0	Voltage of internal power supply	Updated according to actual measurements			1 Day	24	Average of the rectified voltage that powers the actuator.	No

BACnet BIBBs services

Service	BIBBs	Init/Exe
ReadProperty	DS-RP-B	exe
WriteProperty	DS-WP-B	exe
Who-Is	DM-DDB-A	init
Who-Is	DM-DDB-B	exe
I-Am	DM-DDB-B	init
I-Am	DM-DDB-A	exe
Who-Has	DM-DOB-B	exe
I-Have	DM-DOB-B	init
DeviceCommunicationControl	DM-DCC-B	exe
ReinitializeDevice[1)]	DM-RD-B	exe
ConfirmedEventNotification	AE-N-I-B	init
UnconfirmedEventNotification	AE-N-I-B	init
AcknowledgeAlarm	AE-ACK-B	exe
GetEventInformation	AE-INFO-B	exe

Service	BIBBs	Init/Exe
GetAlarmSummary	AE-ASUM-B	exe
GetEnrollmentSummary	AE-ESUM-B	exe
AddListElement	DM-LM-B	exe
RemoveListElement	DM-LM-B	exe
ReadPropertyMultiple	DS-RPM-B	exe
WritePropertyMultiple	DS-WPM-B	exe
SubscribeCOV [2)]	DS-COV-B	exe
Restart	DM-R-B	exe
AtomicWriteFile	na	exe

[1)] NovoCon® supports BACnet warm reset (power cycle) and Cold reset (factory reset). Note that after Cold/factory reset a calibration will be automatically performed and all settings will be reverted to factory settings.

[2)] COV is implemented for the following: Analog Inputs AI:0, AI:1 and AI:2, and for the following Analog Values AV:2 and AV:27.

© Danfoss | 2023.01

Modbus registers - Configuration

Modbus register	Read/ Write	Modbus function	Modbus Data Type	Object / Parameter name	Description	Default State	Unit	Description of usage	Persistent Yes/No
0x8000 32768	R/W	3,4 & 16	FLOAT	Design Flow Rate	Recommended to use 32796 for Heating and/or 32798 for cooling. Pre-set value for the Design Flow Rate when control signal is at 100%. Unit follows 32787	Nominal value from the Valve table in L/h	%, L/h, GPM	AB-QM 4.0 DN15-DN32: 10% of nominal flow AB-QM DN10-DN32: 20% of nominal flow AB-QM DN40-DN250: 40% of nominal flow	Yes
0x8002 32770	R/W	3,4 & 6	WORD	Control Fallback Time	Time before actuator reacts to a missing analog control signal	10	Minutes	Control Fallback Time in minutes, i.e.. 0 … 60 correspond to 0 … 60 minutes	Yes
0x8004 32772	R/W	3,4 & 16	FLOAT	Alpha Value	Value used for shaping the curve in Manual Defined Function (MDF) mode to fit the characteristics curve of a heat exchanger. If 33280 is in L/h in Digital mode, the alpha setting is ignored.	1.0	na	Alpha Value curve, i.e. 0.05 … 1.00 correspond to 0.05 … 1.00. Alpha = 1.00 is liniar. Alpha = 0.2 is equal to the LOG function. See Alpha value diagram.	Yes
0x8006 32774	R/W	3,4 & 16	WORD	Valve closing or opening time	The time the actuator needs to move from 0% to 100% of Design Flow Rate. Use with 32803.	na	Seconds	Valve closing or opening time in seconds i.e.. 18 … 700 correspond to 18 … 700 seconds	Yes
0x8008 32776	R	3,4 & 6	FLOAT	Nominal Flow of the user defined valve	The Nominal flow of the user defined valve is shown here. This Object is used only if NovoCon® is not used with an AB-QM valve. Please contact your Danfoss representative to verify if the desired connection is possible.	na	L/h or GPM, Unit type comes from Valve Table	Nominal flow e.g. in Liters per hour i.e. 0 ..600 correspond to 0 …600 L/h	Yes
0x800A 32778	R	3 & 4	FLOAT	Valve position at nominal flow for User Defined Valve	Position in mm for nominal flow of the User Defined Valve. This Object is used only if NovoCon® is not used with an AB-QM valve. Please contact your Danfoss representative to verify if the desired connection is possible.	4	Millimetre	Valve position for nominal flow in millimetre, i.e. 0.5 … 5.8 correspond to 0.5 … 5.8 millimetre	Yes
0x800C 32780	R/W	3,4 & 6	FLOAT	Maximum value for the Design Flow in the User Defined Valve	Maximum level the Design Flow Rate can be increased to for the User Defined Valve. This Object is used only if NovoCon® is not used with an AB-QM valve. Please contact your Danfoss representative to verify if the desired connection is possible.	100	Unit type follows 32787 selection: % or (L/h or GPM)	i.e. 100 ..150 correspond to 100 …150 %	Yes
0x8012 32786	R/W	3,4 & 6	WORD	Direct or Inverse operation Mode	Selection between Direct and Inverse operation mode. See Direct/Inverse diagram.	0: Direct	0: Direct 1: Inverse	Selection between Direct and Inverse operation mode. See Direct/Inverse diagram.	Yes
0x8013 32787	R/W	3,4 & 6	WORD	Units of and display the Design Flow Rate	Units used to set and display the Design Flow Rate. Units for L/h & GPM comes from Selected Valve Type.	0: L/h	0: L/h 1: % 2: GPM	Engineering Units used for the Design Flow Rate.	Yes
0x8014 32788	R/W	3,4 & 6	WORD	Units of and display Flow Rate Setpoint	Units used to set and display Flow Rate Setpoint	1: %	0: L/h 1: % 2: GPM 3: kW 4: kBTU/h	Engineering Units used for the desired Flow 33280. Note: If kW or kBTU/h chosen then 32815 Power Controller (state 3) also becomes active.	Yes
0x8015 32789	R/W	3,4 & 6	WORD	Units of and display the Flow Rate feedback	Units used to set and display the Flow Rate feedback	0: L/h	0: L/h 1: % 2: GPM	Engineering Units used for 33282.	Yes
0x8016 32790	R/W	3,4 & 6	WORD	Units of temperature	Select between °C or °F to set and display temperature	0: °C	0: °C 1: °F	Engineering Units for 33796, 32836. 32838, 32840 & 32842.	Yes
0x8017 32791	R/W	3,4 & 6	WORD	Units of T1	Units used to read the temperature or resistance value.	0: °C	0: °C 1: °F 2: Ohms	Engineering Units used for 33218.	Yes
0x8018 32792	R/W	3,4 & 6	WORD	Units of T2				Engineering Units used for 33220.	
0x8018 32818**	R/W	3,4 & 6	WORD	Units of T3				Engineering Units used for 33222.	
0x8019 32793	R/W	3,4 & 6	WORD	Units of Power	Units used to read the power usage.	0: kW	0: kW, 1: kBTU/h	Engineering Units for 33288.	Yes
0x801A 32794	R/W	3,4 & 6	WORD	Endian type	Word ordering for LONG and FLOAT types	0: Big	0: Big 1: Little	Used endian type for float and long registers	Yes
0x801C 32796	R/W	3,4 & 16	FLOAT	**Heating Design Flow Rate**	Pre-set value for the Design Flow Rate when the control signal is at 100%. 32810 must be set to Heating or Cooling. Unit follows 32787	Nominal value from the Valve table in L/h	%, L/h, GPM	AB-QM 4.0 DN15-DN32: 10% of nominal flow AB-QM DN10-DN32: 20% of nominal flow AB-QM DN40-DN250: 40% of nominal flow	Yes
0x801E 32798	R/W	3,4 & 16	**FLOAT**	**Cooling Design Flow Rate**					

** *Only for NovoCon M, L/XL*

Modbus registers - Configuration *(continued)*

Modbus register	Read/ Write	Modbus function	Modbus Data Type	Object / Parameter name	Description	Default State	Description of usage	Persistent Yes/No
0x802A 32810	R/W	3,4 & 6	WORD	**Application mode**	1: Analog control 2: Digital control 3: CO6 mode* 4: Inverted CO6 mode* 5: CO6 without alarms* 6: Inverted CO6 without alarms* 7: Analog CO6 mode* 8: Analog inverted CO6 mode*	2: Digital	Select the actuator application mode. **State 1:** Analog Control. Flow is controlled with an analog signal e.g. 0-10V. Design Flow Rate set via register 32796 Heating and/or 32798 Cooling. Alternative 32738 can be used. **State 2:** Digital Control. Register 33280 is used to control the flow. Design Flow Rate set via register 32796 Heating and/or 32798 Cooling. Alternative 32738 can be used. **State 3*:** CO6 mode. Register 33280 is used to control the flow. Heating Design Flow Rate set via register 32796 and register 32798 for Cooling Design Flow Rate. Heating is connected to the CO6 valve to ports 5 & 6 and cooling to ports 1 & 4. **State 4*:** Inverted CO6 mode. Register 33280 is used to control the flow. Heating Design Flow Rate set via register 32796 and 32798 for Cooling Design Flow Rate. Ports are inverted in relation to State 3.* **State 5*:** CO6 without alarms. Register 33280 is used to control the flow. Heating Design Flow Rate set via register 32796 and 32798 for Cooling Design Flow Rate. This state may be used if the Analog Input is required to be used other than CO6 feedback. Be aware that in this state the status for the CO6 valve is not shown.* **State 6*:** Inverted CO6 without alarms. register 33280 is used to control the flow. Heating Design Flow Rate set via register 32796 and 32798 for Cooling Design Flow Rate. Ports are inverted in relation to State 3. This state may be used if the Analog Input is required to be used other than CO6 feedback. Be aware that in this state the status for the CO6 valve is not shown.* **State 7*:** Analog CO6 mode. The flow is controlled from the Room controller via the analog input signal. Heating Design Flow Rate set via register 32796 and 32798 for Cooling Design Flow Rate. Register 32786 is in this case used to switch the control signal. Be aware that in this state the status for the CO6 valve is not shown.* **State 8*:** Analog inverted CO6 mode. The flow is controlled from the Room controller via the analog input signal. Heating Design Flow Rate set via register 32796 and 32798 for Cooling Design Flow Rate. In this state the Cooling and heating is connected opposite of state 7. When changing to this state the values in register 32848-32854 are reversed. Register 32786 is in this case used to switch the control signal. Be aware that in this state the status for the CO6 valve is not shown.*	Yes
0x802B 32811	R/W	3,4 & 6	WORD	**Application command & status**	1: Heating 2: Cooling 3: CO6 Shut Off *[1)] ⚠ 4: CO6 Start exercise 5: CO6 Moving towards Cooling* 6: CO6 Moving towards Heating* 7: CO6 Alarm* 8: CO6 Exercising*	1: Heating	States 1 to 4 are commands for the Actuator NovoCon® ChangeOver6 and impact Energy management Application register 32815. States 5 to 8 are feedback from the Actuator NovoCon® ChangeOver6. **State 3, shut-off mode may only be used for maintenance and is only possible when the Flow Rate Setpoint is 0%.** In Central ChangeOver applications, state 1 and 2 are used to command heating or cooling.	Yes
0x802C 32812*	R/W	3,4 & 6	WORD	CO6 auto exercise	1: ON 2: OFF	1: ON	1: ON: The ChangeOver6 valve will be moved from current position to shut off and back again once per week to maintain free movement, if CO6 mode is selected. 2: OFF: Exercising the valve should be handled by BMS.	Yes
0x802E 32814	R/W	3,4 & 6	WORD	Energy counting method	1: Off 2: On, indicated flow 3: On, flow sensor on return pipe 4: On, flow sensor on supply pipe	1: Off	**State 1:** Off NovoCon® is not calculating energy. **State 2:** On, indicated flow NovoCon® is calculating energy based on temperature difference between T1 and T2 and using indicated flow. **State 3:** On, flow sensor on return pipe NovoCon® is calculating energy based on temperature difference between T1 and T2 and using flow from flow sensor installed on return pipe. **State 4:** On, flow sensor on supply pipe NovoCon® is calculating energy based on temperature difference between T1 and T2 and using flow from flow sensor installed on supply pipe.	Yes
0x802F 32815	R/W	3,4 & 6	WORD	Energy management	1: Not active **Power Manager:** 2: Power limitation 3: Power control **Delta T Manager:** 4: Min. Delta T limitation 5: Set Delta T control 6: Return T limitation 7: Set Return T control	1: Not used	Activate functions to optimize system performance. The calculated flow from the activated energy functions is limited to register 32862 Energy management min flow, except the function Power control that has a limitation at min. 2% of the Design Flow Rate. If needed the PI values can be fine tuned in register 32856 and 32858. **State 1:** Not active. **State 2:** If power is above the set value in register 32832 or register 32834, NovoCon will regulate to the specified limit register 32832 and/or 32834. When this limitation is active, the warning bit 23 in register 33536 will be set to 'on'. **State 3:** The flowrate through the valve is controlled by register 33280 in %, kW or kBTU/h (selected in 32793) and is based on the flowrate and temperature inputs. **State 4:** If delta T value in register 32836 and/or 32838 is exceeded, NovoCon will begin to close the valve until the register 32836 and/or 32838 values are reached. When this limitation is active, the warning bit 23 in register 33536 will be set to 'on'. **State 5:** The constant delta T is set in register 32836 and/or 32838 and NovoCon will regulate within these limits. When this control is active, the warning bit 23 in register 33536 will be set to 'on'. **State 6:** NovoCon ensures the min. or max. return temp. T2 set in 32840 & 32842. In register 32811 Heating/cooling application must be selected. When this limitation is active, the warning bit 23 in register 33536 will be set to 'on'. **State 7:** A constant T2 value is set in 32840 and/or 32842. NovoCon will regulate to maintain these values constant.	Yes
0x8020 32800	R/W	3,4 & 6	WORD	Analog Control signal type and range	Used to select the analog control signal input type and range	2: 0-10 VDC	Select 1, 2 or… based on the table below: 1: 0-5 VDC 2: 0-10 VDC 3: 2-10 VDC 4: 5-10 VDC 5: 2-6 VDC 6: 6-10 VDC 7: 0-20 mA 8: 4-20 mA	Yes
0x8021 32801	R/W	3,4 & 6	WORD	Missing Control Signal Fallback Action	The action that the actuator will commence upon a missing analog control signal.	1: No action	Select 1, 2 or… based on the table below: 1: No action 2: CLOSE 3: OPEN 4: Go to 50% of Design Flow Rate	Yes
0x8022 32802	R/W	3,4 & 6	WORD	**Selected Valve Type**	This is the AB-QM valve type that the actuator is set-up to control	2: AB-QM 4.0 ISO DN 15	See table Valve Type Selection	Yes

** Only for NovoCon S*

[1)] A zero Flow Rate Setpoint command (33280) closes the AB-QM, so that there is neither heating nor cooling, do not use the CO6 maintenance shut-off function for this purpose.

⚠ ***The CO6 valve shut-off function should only be used for maintenance and only when the water temperature in terminal unit is equal to ambient temperature or the terminal unit is not mounted. A water temperature change inside of a closed coil could result in rising pressure and possible damage of to the terminal unit.***

 © Danfoss | 2023.01

Modbus registers - Configuration *(continued)*

Modbus register	Read/ Write	Modbus function	Modbus Data Type	Object / Parameter name	Description	Default State	Unit	Description of usage	Persistent Yes/No
0x8023 32803	R/W	3,4 & 6	WORD	Actuator Speed	The amount of time the actuator takes to move 1mm or alternatively, a specified constant time function (see 32774). The Constant Time value range is 18-700 seconds.	4: 24 sec/mm	na	Select 1, 2 or… based on the table below: 1: 3 sec/mm 3: 12 sec/mm 2: 6 sec/mm 4: 24 sec/mm 5: Constant Time (set by register 0x8006)	Yes
0x8024 32804	R/W	3,4 & 6	WORD	Baud Rate	Baud Rate used for bus communication	1: Auto Baud Rate Detection	na	Select 1, 2 or… based on the table below: 1: Auto Baud Rate Detection 2: 9600 bps 5: 57600 bps 3: 19200 bps 6: 76800 bps 4: 38400 bps 7: 115200 bps	Yes
0x8025 32805	R/W	3,4 & 6	WORD	Select UART mode	Supported transmission modes	5: Auto parity	na	Select 1, 2, 3 or 4 based on the table below: 1: 1-8-N-2 4: 1-8-N-1 2: 1-8-O-1 5: Auto parity 3: 1-8-E-1 Data format: (Start bit-Data bits-Parity-Stop bits)	Yes
0x8026 32806	R/W	3,4 & 6	WORD	Slave ID	Slave ID used for communication.	na	na	Slave ID used for communication	Yes
0x8027 32807	R/W	3,4 & 6	WORD	Slave ID asignment method	The Slave ID address selection method.	1: DIP Switch Settings	na	1: DIP Switch Settings 2: User configuration over Modbus If DIP Switches are in an invalid position the actuator will automatically check if a Slave ID is present in the User Configuration.	Yes
0x8028 32808	R/W	3,4 & 6	WORD	BUS protocol	Select field bus protocol to be used. See also the DIP Switch Settings section of the data sheet. When the protocol is changed, a power cycle is required to make the actuator adopt the newly selected protocol.	1: DIP switch	na	Select 1, 2 or 3 based on the table below: 1: DIP switch 2: BACnet 3: Modbus	Yes
0x8029 32809	R/W	3,4 & 6	WORD	LED Control	Used to select the LED display required.	1: Normal LED mode	na	Select 1, 2 or… based on the table below: 1: Normal LED mode 2: Show alarms only 3: All LED's OFF 4: Blink (can be used to locate the actuator)	Yes
0x8030 32816	R/W	3,4 & 6	WORD	Units of set Energy counter	Units used to set energy counter	0: kWh	0: kWh 1: MJ 2: kBTU	Engineering Units used for 33290 & 33292.	Yes
0x8031 32817	R/W	3,4 & 6	WORD	Analog feedback signal	Set analog output according to valve position	0: Inactive	na	0: Inactive 1: Active By activating this feature, the analog output signal (33286) and the position of the valve opening become linked. The voltage output type and range is linked to the 32800 present value. This feature may be used for FCU fan control for example and is only made available when 32810 Application Mode are in State 1: Analog control or State 2: Digital control. If 32817 is active and the analog output signal (33286) must be written to manually, it is necessary to change the setting of 32817 to inactive.	Yes
0x8033 32819	R/W	3,4 & 6	WORD	T1, T2 temperature sensor type	Select the type of Temperature sensor connected to T1 and T2.	3: Pt1000	na	Select temperature sensor type: 2: NTC10k Type 3 4: PT500 1: NTC10k Type 2 3: Pt1000 5: PT100	Yes
0x8034 32820**	R/W	3,4 & 6	WORD	T3 temperature sensor type	Select the type of Temperature sensor connected to T3.	3: Pt1000	na	Select temperature sensor type: 3: Pt1000 1: NTC10k Type 2 4: PT500 2: NTC10k Type 3 5: PT100	Yes
0x8035 32821	R/W	3, 4 & 6	WORD	AI input	Different options for analog input terminal	2: Analog input	na	1: Disabled 2: Analog input (voltage/current) 3: Flow sensor***	Yes
0x8036 32822	R/W	3, 4 & 6	WORD	T1 input	Different options for T1 terminal	2: Supply temp.	na	1: Disabled 3: Return temperature 2: Supply temperature 4: Flow sensor	Yes
0x8037 32823	R/W	3, 4 & 6	WORD	T2 input	Different options for T2 terminal	3: Return temp.	na	1: Disabled 3: Return temperature 2: Supply temperature 4: Flow sensor	Yes
0x8038 32824**	R/W	3, 4 & 6	WORD	T3 input	Different options for T3 terminal	2: Control temp.	na	1: Disabled 2: Control temperature sensor 3: Flow sensor	Yes
0x804C 32844	R/W	3, 4 & 16	FLOAT	Glycol Factor	Glycol correction factor	1	na	Select appropriate factor from 0.5-2 if a glycol mixture is used.	Yes
0x8050 32848*	R/W	3,4 & 16	FLOAT	Analog CO6 Heating point 100%	Signal point for Analog CO6 mode*	0	na	The control signal for heating 100% open when register 32810 = State 7 or 8. Overlaping heating and cooling control curves are not accepted.	Yes
0x8052 32850*	R/W	3,4 & 16	FLOAT	Analog CO6 Heating point 0%	Signal point for Analog CO6 mode*	3.3	na	The control signal for heating 0% open when register 32810 = State 7 or 8. Overlaping heating and cooling control curves are not accepted.	Yes
0x8054 32852*	R/W	3,4 & 16	FLOAT	Analog CO6 Cooling point 0%	Signal point for Analog CO6 mode*	6.7	na	The control signal for cooling 0% open when register 32810 = State 7 or 8. Overlaping heating and cooling control curves are not accepted.	Yes
0x8056 32854*	R/W	3,4 & 16	FLOAT	Analog CO6 Cooling point 100%	Signal point for Analog CO6 mode*	10	na	The control signal for cooling 100% open when register 32810 = State 7 or 8. Overlaping heating and cooling control curves are not accepted.	Yes
0x8058 32856	R/W	3,4 & 16	FLOAT	Control-Gain P	Set proportional part for control	7	na	Sets the proportional part for control of register 32815 Energy management functions.	Yes
0x805A 32858	R/W	3,4 & 16	FLOAT	Control-Gain I	Set integral part for control	0.35	na	Sets the integral part for control of register 32815 Energy management functions. I parameter in sec. = (Pgain / Igain) * 2 sec. Default: 7/0.35 * 2sec. = 40 sec.	Yes
0x805E 32862	R/W	3,4 & 16	FLOAT	Energy management min flow	Energy management minimum flow in percentage of register 32796 or 32798 Design flow Rate.	10	%	Minimum allowed flow while the Energy management function register 32815 is active. Exceptions, the object has no effect if: The energy limitation is inactive or the Power control energy mgmt. function is selected. In this case, the min. flow limit is set to 2% of the Design flow rate. 0 …100 correspond to 0 … 100%.	Yes
0x8060 32864	R/W	3, 4 & 16	FLOAT	Pulse volume	Pulse volume of connected flow sensor	0	Litre/pulse	Adapts automatically to the selected AB-QM valve, but can be overwritten manually. If set to 0 NovoCon only count pulses and do not perform flow measurements based on received pulses. This can be used to connect e.g. water meter or energy meter.	Yes
0x8500 34048	W	6	WORD	Reset	Warm reset = Power cycle. Cold reset = Factory reset. Note that after factory reset a calibration will be automatically be performed and all settings will be reverted to factory settings.	na	na	0x5741 / 22337: Warm reset 0x434F / 17231: Cold reset.	na

** Only for NovoCon S*
*** Only for NovoCon M, L/XL*
**** Not suitable for SONO 3500 CT!*

Modbus registers - Operating

Modbus register	Read/ Write	Modbus function	Modbus Data Type	Object / Parameter name	Description	Default State	Unit	Description of usage	Persistent Yes/No
0x8200 33280	R/W	3,4 & 16	FLOAT	**Flow Rate Setpoint**	The Flow Rate Setpoint through the AB-QM valve. Unit follows 32788. In case the Energy management functions are active the Flow Rate Setpoint will follow the actual setting controlled by the Energy Management function.	100%	%, L/h, GPM, kW, kBTU/h	Flow Rate Setpoint in percent, i.e.0 … 100 correspond to 0 … 100%	No
0x8202 33282	R	3 & 4	FLOAT	**Flow Rate feedback**	Flow Rate Indication based on the position of the Actuator stem. Unit follows 32789	na	%, L/h, GPM	Flow Rate feedback in percent, i.e. 0 … 100 correspond to 0 … 100%. If L/h (GPM) is selected in 32787 then the valve flow rate is set to the selected valve's 32776 maximum value. Otherwise 100%	No
0x8204 33284	R/W	3,4 & 6	WORD	**Actuator Mode and special features**	Shows present mode of actuator. Calibration, Flush and de-air may be started from here	1:Normal	na	Select 1, 2 or… based on the table below: 1: Normal 2: Calibration 3: Flush 4: De-Air 5: Alarm	Yes, except state 3,4 & 5
0x8206 33286	R/W	3,4 & 16	FLOAT	**Voltage on analog output**	Output Voltage value in Digital and Analog mode 32810. Note: In CO6 and Inversed CO6 mode the present value is not writeable	na	Volts	Voltage level i.e. 0.00 … 10.00 correspond to 0.00 … 10.00 V	No
0x8208 33288	R	3,4 & 16	FLOAT	**Power emission**	The hydronic power emission of the terminal unit, based on calculations from water flow rate and the temperature difference between supply (33218) and return (33220) pipes. Positive values reflect heating power emission. Negative values reflect cooling power emission. Units can be changed via the object's engineering units property.	na	kW, kBTU/h	Power in kW or kBTU/h. If register 32844 Glycol correction is used, Power emission will be adjusted accordingly. i.e. -1000.00 … 1000.00 correspond to -1000.00 … 1000.00 kW or in kBTU/h, i.e. -1000.00 … 1000.00 correspond to -1000.00 … 1000.00 kBTU/h	No
0x820A 33290	R	3,4 & 16	FLOAT	Heating Energy counter	Energy counter for heating	na	kWh, MJ, kBTU	Accumulative Energy counter for heating. i.e. 0.00 … 1000.00 correspond to 0.00 … 1000.00 kWh. If register 32844 Glycol correction is used, Heating Energy Counter emission will be adjusted accordingly. Activated/Deactivated via register 32814.	Yes
0x820C 33292	R	3,4 & 16	FLOAT	Cooling Energy counter	Energy counter for cooling	na	kWh, MJ, kBTU	Accumulative Energy counter for cooling. i.e. 0.00 … 1000.00 correspond to 0.00 … 1000.00 kWh. If register 32844 Glycol correction is used, Cooling Energy Counter emission will be adjusted accordingly. Activated/Deactivated via register 32814.	Yes
0x820E 33294	R	3 & 4	FLOAT	Position feedback	Position of the Actuator stem in percentage	na	%	Design Flow Rate feedback in percent, 0 …100 correspond to 0 … 100%.	No
0x8210 33296	R	3, 4	FLOAT	Volume counter	Total accumulated water volume	0	L	Total accumulated water volume passed through the valve, combined from both heating and cooling	Yes
0x8212 33298	R	3, 4	FLOAT	Pulse counter	Total accumulated number of pulses	0	pulse	Total accumulated number of pulses received from flow sensor	Yes
0x8040 32832	R/W	3,4 & 16	FLOAT	Heating max. Power	Pre-set value for the design power, in heating mode, when control signal is at 100%	0	kW, kBTU/h	When using register 32815 state Power limiter this is the maximum allowed hydronic energy output. This value is intended to limit the heating power through the terminal unit. i.e. 0.00 … 10.00 correspond to 0.00 … 10.00 kW	Yes
0x8042 32834	R/W	3,4 & 16	FLOAT	Cooling max. power	Pre-set value for the design power, in cooling mode, when control signal is at 100%	0	kW, kBTU/h	When using register 32815 state Power limiter this is the maximum allowed hydronic energy output. This value is intended to limit the cooling power through the terminal unit. i.e. 0.00 … 10.00 correspond to 0.00 … 10.00 kW	Yes
0x8044 32836	R/W	3,4 & 16	FLOAT	Heating Delta T	Set-point value for the temperature difference between the flow and return pipes	15	°C or °F	For register 32815 state Minimum Delta T management and Set Delta T control, this is the value the control is based on for heating. i.e. 5 … 50 correspont to 5°C … 50°C	Yes
0x8046 32838	R/W	3,4 & 16	FLOAT	Cooling Delta T	Set-point value for the temperature difference between the flow and return pipes	5	°C or °F	For register 32815 state Minimum Delta T management and Set Delta T control, this is the value the control is based on for cooling. i.e. 5 … 50 correspont to 5°C … 50°	Yes
0x8048 32840	R/W	3,4 & 16	FLOAT	Heating T2	Set-point value for Heating T2 (Heating return pipe temperature)	35	°C or °F	For register 32815 state Max. Return T management and Set return T control, this is the value the control is based on for heating. i.e. 5 … 50 correspont to 5°C … 50°	Yes
0x804A 32842	R/W	3,4 & 16	FLOAT	Cooling T2	Set-point value for Cooling T2 (Cooling return pipe temperature)	13	°C or °F	For register 32815 state Min. Return T management and Set return T control, this is the value the control is based on for cooling. i.e. 5 … 50 correspont to 5°C … 50°	Yes

© Danfoss | 2023.01

Modbus registers - Information

Modbus register	Read/ Write	Modbus function	Modbus Data Type	Object / Parameter name	Description	Default State	Unit	Description of usage	Persistent Yes/No
0x8100 33024	R	3 & 4	FLOAT	Nominal flow of the selected valve type	Nominal flow of the selected valve type	450	L/h or GPM, Unit type comes from Valve Table	Nominal flow e.g. in Litres per hour i.e. 0 ..450 correspond to 0 …450 L/h.	na
0x8102 33026	R	3 & 4	FLOAT	Valve position at nominal flow	Position in mm for nominal flow of the selected valve	na	Millimetre	Valve position for nominal flow in millimetre, i.e.. 0.5 … 5.8 correspond to 0.5 … 5.8 millimetre.	na
0x8104 33028	R	3 & 4	FLOAT	Maximum value of the Design Flow Rate	Maximum level the Design Flow Rate can be increased to for the selected valve	Setting Range Maximum from Valve table	%	Maximum level of the Design Flow Rate in percent, i.e. 20 … 100 correspond to 20 … 100%.	na
0x8120 33056	R/W	3 & 4	STRING	Device name	Product name	NovoCon S	na	ASCII coded STRING	Yes
0x8140 33088	R	3 & 4	STRING	Model name	Type of the actuator	CO6	na	ASCII coded STRING	Yes
0x8160 33120	R	3 & 4	STRING	Vendor name	Name of the Manufacture	Danfoss A/S	na	ASCII coded STRING	Yes
0x8180 33152	R/W	3, 4 & 16	STRING	Location description	Free text can be used to describe location etc. E.g. Room 1	na	na	ASCII coded STRING. Max. 50 characters.	Yes
0x81A0 33184	R	3, 4	STRING	Serial number	Serial number of the actuator	na	1	Description of this object holds the serial number of the actuator, programmed at the production time.	Yes
0x8108 33032	R	3, 4	LONG	Product ID	Serial number of the actuator	na	1	Unique Product id. The last part of the serial number.	Yes
0x810A 33034	R	3 & 4	WORD	SW version	Software version of the actuator	na	na	ASCII coded WORD	Yes
0x810B 33035	R	3 & 4	WORD	HW version	Hardware version of the actuator	na	na	ASCII coded WORD	Yes
0x81C0 33216	R	3 & 4	FLOAT	Voltage or Current on analog input	Voltage(V) or Current(mA) level on the analog control input, measured by the actuator. In CO6 modes mA cannot be selected.	na	Volts / mA	Voltage level measured i.e. 0.00 … 10.00 correspond to 10.00 … 10.00 V or in mA, i.e. 0.00 … 20.00 correspond to 0.00 … 20.00 mA	No
0x81C2 33218	R	3 & 4	FLOAT	T1 value	Temperature/resistance measured from connected Pt1000 sensors. For Power emission 33288, register 33218 is temperature on the flow pipe and 33220 is temperature on the return pipe.	°C	°C, °F, Ohms	Temperature measured in °C i.e. -10°C … . 120°C or resistance measured i.e. 900Ω … 10kΩ. The upper temperature limit for NTC 10k Type 2 sensors is 90°C/194°F. The upper temperature limit for NTC sensor 10k Type 3 is 95°C/203°F. When used as potential free contacts: Closed circuit <900Ω, open circuit 100kΩ. The upper temperature limit for NTC 10k Type 2 sensors is 90°C/194°F. The upper temperature limit for NTC sensor 10k Type 3 is 95°C/203°F. Recommended max. cable length 3m.	No
0x81C4 33220	R	3 & 4	FLOAT	T2 value					
0x81C6 33222*	R	3 & 4	FLOAT	T3 value					
0x8402 33794**	R	3 & 4	FLOAT	Voltage of internal power supply	Measured rectified voltage which powers the actuator	na	Volts	Rectified voltage which powers the actuator. Too low voltage: 16.1-17.5V Too high voltage: 38.3-43.4V	No
0x8404 33796	R	3 & 4	FLOAT	Temperature in the actuator	Temperature measured inside the Actuator	na	na	Temperature measured inside the actuator. Unit is decided by 32790.	No
0x8406 33798	R	3 & 4	LONG	Total Operating Hours	Total Operating Hours of the actuator	Hours	Hours	Total Operating Hours of the actuator	Yes
0x8408 33800	R	3 & 4	LONG	Lifetime estimate	Calculated percentage of expended lifetime	%	na	At 100% the valve and actuator have reached the estimated minimum lifetime. Replacement of valve and actuator is recommended.	Yes
0x8410 33808	R	3 & 4	LONG	Minutes since last power-up	Minutes since the last power-up of the actuator	Minutes	Minutes	Minutes since the last power-up of the actuator	No
0x8412 33810	R	3 & 4	LONG	Minutes since last calibration	Minutes since the last time the actuator was calibrated to an AB-QM valve	Minutes	Minutes	Minutes since the last time the actuator was calibrated to a valve	Yes
0x8414 33812	R	3 & 4	LONG	Minutes since fully closed	Minutes since the last time the AB-QM valve was fully closed	Minutes	Minutes	Minutes since the last time the valve was fully closed	Yes
0x8416 33814	R	3 & 4	LONG	Minutes Since Fully Opened	Minutes since the last time the AB-QM valve was fully opened	Minutes	Minutes	Minutes since the last time the valve was fully opened	Yes

* *Only for NovoCon S*
** *Only for NovoCon M, L/XL*

Alarms & warning

Modbus register	Read/ Write	Modbus function	Modbus Data Type	Object / Parameter name	Description	Default State	Description of usage	Persistent Yes/No
0x8300 33536	R	3&4	LONG	Alarm: No Control Signal	The actuator has detected that is has no analog control signal	0: OFF	Bit 0: 0:OFF; 1:ON	No
				Alarm: Error during Closing	The actuator is unable to reach it's intended closing position. Check for valve blockages.	0: OFF	Bit 1: 0:OFF; 1:ON	No
				Alarm: Error during Calibration	There was an error during calibration of the actuator. E.g. the NovoCon® actuator is not mounted on the valve or the valve is stuck	0: OFF	Bit 2: 0:OFF; 1:ON	No
				Alarm: An internal Error has been detected	Re-calibrate or power cycle actuator to reset - actuator replacement may be necessary	0: OFF	Bit 3: 0:OFF; 1:ON	No
				Alarm: CO6 in manual override or CO6 unable to move*	ChangeOver[6] actuator is in manual override or is unable to reach position. When the reason for the alarm is removed it may take up to 2 minutes before the alarm is cleared.	0: OFF	Bit 4: 0:OFF; 1:ON	No
				Alarm: CO6 actuator not connected or damaged*	The ChangeOver[6] actuator is not connected or is damaged.	0: OFF	Bit 5: 0:OFF; 1:ON	No
				Alarm: Temp. sensors are missing or interchanged	Temp. sensors are missing or interchanged	0: OFF	Bit 6: 0: OFF; 1:ON	No
				Warning: Temperature of the actuator is out of recommended range	The Temperature inside the Actuator is out of the recommended range	0: OFF	Bit 16: 0:OFF; 1:ON	No
				Warning: Pre-set Conflict	Warning: Conflict between the Mechanical AB-QM valve setting and the NovoCon®. The mechanical valve setting must be 100% or above. The warning will also be activated if the Selected Valve Type has different stroke than the actually valve used validated during calibration.	0: OFF	Bit 17: 0: OFF; 1:ON	No
				Warning: Voltage of power supply is too high	Voltage of power supply is measured to be too high. When the measured voltage exceeds 43.4V the alarm will be turned ON for too high voltage. When the measured voltage is below 38.3V the alarm will be turned OFF	0: OFF	Bit 18: 0:OFF; 1:ON	No
				Warning: Voltage of power supply is too low	Voltage of power supply is measured to be too low. If voltage drops below 14.5V (NovoCon S) or 19.0 (NovoCon M/L/XL), alarm is activated. If voltage drops below 14.0V (NovoCon S) or 13.0 (NovoCon M/L/XL), alarm is activated and motor disabled. If voltage goes above 15.5V (NovoCon S) or 18.2V (NovoCon M/L/XL), alarm deactivates and motor is enabled.	0: OFF	Bit 19: 0:OFF; 1:ON	No
				Warning: Faults on communication was detected	Problems with Communication on the network are detected	0: OFF	Bit 21: 0:OFF; 1:ON	No
				Warning: Invalid Slave ID setting	Slave ID assignment was done incorrectly to either 0 or 127	0: OFF	Bit 22: 0:OFF; 1:ON	No
				Warning: Energy limitation is active	Limitation is active. E.g. Power limitation, min. delta T or min/max return T management limitation.	0: OFF	Bit 23: 0: OFF; 1:ON	No
				Warning: Energy management controller out of range	Power, delta T or return T setpoint is out of range or the setpoint cannot be achieved. Action: Check that setpoint is achievable with the given flow rates and temperatures.	0: OFF	Bit 24: 0: OFF; 1:ON	No
				Warning: Flow out of expectations	Warning for lower or higher flow than expected	0: OFF	Bit 25 0: OFF 1:ON	No
				Warning: No flow detected	Flow sensor does not recognize any flow, through flow sensor	0: OFF	Bit 26 0: OFF 1:ON	No

** Only for NovoCon S*

Firmware update

Manual update

Using BACnet MS/TP

Ident	Object / Parameter name	Read/ Write	State Text	Default State	Description
MSV:19	Firmware update	R/W	1: Normal 2: Prepare 3: Ready 4: Error 5: Received 6: Update	1: Normal	Commands & status for firmware update. Method used to update the firmware: • Send 'Prepare' command to MSV:19. NovoCon ® will prepare for the firmware update and change status to 'Ready'. • Send file to FIL:0. If successful, status should be 'Received'. • Send 'Update' command. NovoCon ® will reboot and update the firmware. The status should be 'Normal' after a successful firmware update.

Ident	Object / Parameter name	Read/ Write	State Text	Default State	Description
FIL:0	File	W	File used to update the firmware	na	Used to transfer the new firmware to NovoCon ®.

Using Modbus RTU

Modbus register	Read/ Write	Modbus function	Modbus Data Type	Object / Parameter name	Description	Default State	Description of usage
0x8501 34049	R/W	3, 4 & 6	WORD	Firmware update	1: Normal 2: Prepare 3: Ready 4: Error 5: Received 6: Update	1: Normal	Commands & status for Firmware update. Method used to update the Firmware: • Send 'Prepare' command to 34049. NovoCon ® will prepare for the firmware update and change status to 'Ready'. • Send file using Modbus function 21. If successful, status should be 'Received'. • Send 'Update' command. NovoCon ® will reboot and update the software. The status should be 'Normal' after a successful software update

When using modbus function 21 (0x15) to update the firmware in NovoCon® it is nessecasy to perform the upload in smaller sections due to modbus limitations in file size, please see the modbus standard for more details.

Broadcast, update multiple NovoCon® by sending the firmware to Slave Id 0, is supported in modbus. However each NovoCon® must be Prepared before the firmware upload is performed.

Danfoss NovoCon® Configuration tool

Easy configuration, commissioning and firmware updates can be performed with the Danfoss configuration tool. Please see separate operating manual.

© Danfoss | 2023.01

Valve Type Selection

Values for flow are valid for water applications. For glycol mixtures, please use correction factor.

NovoCon® S

Index	Name	Nominal Flow	Units	Valve position for nominal flow [mm]	Setting Range Maximum [%]
1	AB-QM 4.0 ISO DN 15LF	200	L/h	4	100
2[1]	AB-QM 4.0 ISO DN 15	650	L/h	4	100
3	AB-QM 4.0 ISO DN 15HF	1200	L/h	4	100
4	AB-QM 4.0 ISO DN 20	1100	L/h	4	100
5	AB-QM 4.0 ISO DN 20HF	1900	L/h	4	100
6	AB-QM 4.0 ISO DN 25	2200	L/h	4	100
7	AB-QM 4.0 ISO DN 25HF	3800	L/h	4	100
8	AB-QM 4.0 ISO DN 32	3600	L/h	4	100
9	AB-QM 4.0 ISO DN 32HF	5000	L/h	4	100
10	AB-QM ISO DN 10LF	150	L/h	2.25	120
11	AB-QM ISO DN 10	275	L/h	2.25	120
12	AB-QM ISO DN 15LF	275	L/h	2.25	120
13	AB-QM ISO DN 15	450	L/h	2.25	120
14	AB-QM ISO DN 15HF	1135	L/h	4	110
15	AB-QM ISO DN 20	900	L/h	2.25	120
16	AB-QM ISO DN 20HF	1700	L/h	4	110
17	AB-QM ISO DN 25	1700	L/h	4.5	110
18	AB-QM ISO DN 25HF	2700	L/h	4.5	110
19	AB-QM ISO DN 32	3200	L/h	4.5	110
20	AB-QM ISO DN 32HF	4000	L/h	4.5	110
21	AB-QM ANSI ½" LF	1.2	GPM	2.25	100
22	AB-QM ANSI ½"	2	GPM	2.25	100
23	AB-QM ANSI ½" HF	5	GPM	4	100
24	AB-QM ANSI ¾"	4	GPM	2.25	100
25	AB-QM ANSI ¾" HF	7.5	GPM	4	100
26	AB-QM ANSI 1"	7.5	GPM	4.5	100
27	AB-QM ANSI 1" HF	12	GPM	4.5	100
28	AB-QM ANSI 1¼"	14.1	GPM	4.5	100
29	AB-QM ANSI 1¼" HF	17.5	GPM	4.5	100
30[2]	User Defined Valve	NF	UF	VPNF	SRM

[1] Default
[2] The "User Defined Valve" is used only if NovoCon® S is not used with an AB-QM valve. Please contact your Danfoss representative to verify if the desired connection is possible.
When an ANSI valve is selected the units for flow and temperature are default changed from l/h to GPM and Celsius to Fahrenheit, and vice versa when an ISO valve is selected.

NovoCon® M

Index	Name	Nominal Flow	Units	Valve position for nominal flow [mm]	Setting Range Maximum [%]
1[1]	AB-QM NovoCon DN40 PN16 3TP	7,500	L/h	10	100
2	AB-QM NovoCon DN50 PN16 3TP	12,500	L/h	10	100
3	AB-QM NovoCon DN65 PN16 3TP	20,000	L/h	15	100
4	AB-QM NovoCon DN65 PN16 3TP HF	25,000	L/h	15	100
5	AB-QM NovoCon DN80 PN16 3TP	28,000	L/h	15	100
6	AB-QM NovoCon DN80 PN16 3TP HF	40,000	L/h	15	100
7	AB-QM NovoCon DN100 PN16 3TP	38,000	L/h	15	100
8	AB-QM NovoCon DN100 PN16 3TP HF	59,000	L/h	15	100
9[2]	User Defined Valve	NF	UF	VPNF	SRMax

[1] Default
[2] The "User Defined Valve" is used only if NovoCon® M is not used with an AB-QM NovoCon® valve. Please contact your Danfoss representative to verify if the desired connection is possible.

NovoCon® L, XL

Index	Name	Nominal Flow	Units	Valve position for nominal flow (mm)	Setting Range Maximum (%)
1[1]	AB-QM DN125 PN16 3TP	90,000	L/h	30	110
2	AB-QM DN125 PN16 3TP HF	110,000	L/h	30	110
3	AB-QM DN150 PN16 3TP	145,000	L/h	30	110
4	AB-QM DN150 PN16 3TP HF	190,000	L/h	30	110
5[2]	AB-QM DN200 PN16 3TP	200,000	L/h	30	110
6	AB-QM DN200 PN16 3TP HF	270,000	L/h	30	110
7	AB-QM DN250 PN16 3TP	300,000	L/h	30	110
8	AB-QM DN250 PN16 3TP HF	370,000	L/h	30	110
9[3]	User Defined Valve	NF	UF	VPNF	SRMax

[1] Default valve for NovoCon® L (valves index no. 5-8 cannot be selected).
[2] Default valve for NovoCon® XL (valves index no. 1-4 cannot be selected).
[3] The "User Defined Valve" is used only if NovoCon® L/XL is not used with an AB-QM valve. Please contact your Danfoss representative to verify if the desired connection is possible.

Temperature sensors

NovoCon® S

Functional description

The sensor unit consists of a platinum element, the resistance value of wich, changes proportionally with the temperature.

Pt 1000 ohm sensor (1000 ohm at 0°C).
The sensor is adjusted and meets the tolerance requirements of EN 60751 Class B.
The accuracy of temperature measurement is approximately 0.5° in typical operating range.
It is unlikely, that during calculation of ΔT, deviation of both sensors would be summed up.
Therefore, it is estimated that ΔT measurement accuracy is 0.5° when the sensors are mounted correctly.
It is not recommended to use longer wires on temperature sensors than 3m due to risk of electromagnetic interference. If long or thin wires are used it may be necessary to make an offset of the temperature reading in the BMS system.

R (Typ.) Ohm	Temp. °C	Temp. °F	Tolerance. °C
1117	30	86	0.45
1078	20	68	0.40
1039	10	50	0.35
1000	0	32	0.30
961	–10	14	0.35
922	–20	–4	0.40
882	–30	–22	0.45

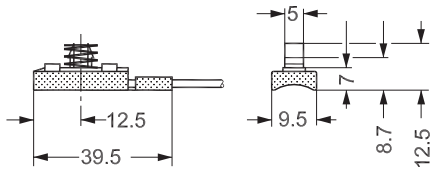

Surface temperature sensor

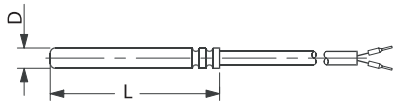

Installation	Type	Diameter **D** (mm)	Length **L** (mm)
Immersed (direct) or in pocket (indirect)	Pt 1000	Ø 5.2	45
		Ø 5.8	40

Tender text

NovoCon® S

Modulating, high accuracy, geared actuator with field bus (BACnet MS/TP and Modbus RTU) connectivity used to control pressure independent balancing and control valves type AB-QM DN10-250.
Control signal digital: BACnet MS/TP, Modbus RTU. Control signal analog: 0-10V/2-10V, 0-20mA/4-20mA
Direct connection to 6-port ball valve actuator with position feedback signal [1)]
Direct connection to 2x Pt1000 surface/immersed sensors and power emission indication [2)]
Direct connection I/O: 2x resistance, AO and AI [3)]
Actuator functionality is remotely accessible via the field bus:

- Design flow pre-setting
- Flushing the valve and terminal unit
- Error during closing intrinsic alarm reporting
- Alarm if CO6 6-port ball valve actuator is blocked, in manual override or disconnected [1)]
- Supply and return temperature readings, power emission indication [2)]
- Energy counter (kWh, MJ, kBTU) [2)]
- Alarm high/low deltaT and temperature sensors disconnected [2)]
- Alpha characteristics setting
- Speed selection 3/6/12/24 s/mm
- Opening/closing time selection from 18s to 700s
- Auto MAC addressing (BACnet only)
- Auto Baud rate detection
- Flow indication based on measured stroke in l/h

Eu.bac interchangeability approved in combination with PIBCV valve
Supply Voltage: 24V DC/AC 50/60Hz
Spindle position accuracy: ±0.05mm
Cables: Halogen free plug-in available in 1.5m, 5m and 10m length
Temperature sensors: plug-in 2x Pt1000 surface or immersed 1.5m length
64 actuators can be connected to the same network
Supports BACnet service Change of Value (COV)
Supports remote Firmware updates
IP Class: 54
Stroke: 7mm
BACnet Testing Laboratories (BTL) listed BACnet MS/TP fieldbus device
Manual override function
Configuration tool available easy configuration, commissioning and firmware updates
Commissioning tool available for addressing, parametrization and hydronic continuous commission

[1)] CO6 application
[2)] Energy application
[3)] Remote I/O application

© Danfoss | 2023.01

Tender text *(continued)*

NovoCon® M

Modulating, high accuracy, geared actuator with bus connectivity used to control pressure independent control valves type AB-QM NovoCon® DN 40-100.
Control signal digital: BACnet MS/TP, Modbus RTU. Control signal analog: 0-10V/2-10V, 0-20mA/4-20mA
Actuator functionality is remotely accessible via the fieldbus:
- design flow pre-setting
- flushing the valve and terminal unit
- error during closing/opening/calibration alarm
- LIN/LOG/α-setting characteristics setting
- selectable speed
- opening/closing time selection
- auto MAC addressing (BACnet)
- auto Parity detection (Modbus)
- auto Baud rate detection
- Flow and energy indication

Supply Voltage 24V ac/dc
64 actuators can be connected to the same network
IP Class: 54
Stroke: 20mm
Manual override function
Click on mounting
LED status indication
BACnet Testing Laboratories (BTL) listed BACnet MS/TP fieldbus device

NovoCon® L, XL

Modulating, high accuracy, geared actuator with bus connectivity used to control pressure independent control valves type AB-QM DN125-250.
Control signal digital: BACnet MS/TP, Modbus RTU. Control signal analog: 0-10V/2-10V, 0-20mA/4-20mA
Actuator functionality is remotely accessible via the fieldbus:
- design flow pre-setting
- flushing the valve and terminal unit
- error during closing/opening/calibration alarm
- LIN/LOG/α-setting characteristics setting
- selectable speed
- opening/closing time selection
- auto MAC addressing (BACnet)
- auto Parity detection (Modbus)
- auto Baud rate detection
- Flow and energy indication
- Safety function in NovoCon® L SU/SD. Spring up or spring down for AB-QM DN125-150 valves.

Supply Voltage 24V ac/dc
64 actuators can be connected to the same network
IP Class: 54
Stroke: 50 mm
Manual override function
LED status indication

Trouble shooting

BACnet Fieldbus check:
It is possible to check the fieldbus state by examining error messaging related to the actuator in order to verify communication and detect early potential fieldbus related problems. This is done by the object values AV:15 to AV:19.

Quality of the BACnet network:
An important thing for good operation of the actuator is a well functioning network. Some values that tell you about the quality of the network can be found in the objects AV:15 to AV:19. The most important values are AV:17 Server Error Count and AV:19 Server Timeout Error. These two values should be much lower than AV:15, AV:16 and AV:18. As a general rule, it is important that AV:17 and AV:19 are not constantly increasing their count.

Quality of power supply:
The object / register AV:6 / 33794 may be used to check if the power supply and cabling, used to supply the actuator with power, is according to specification requirements. The present value of AV:6 / 33794 represents the current voltage measured inside the actuator. This is the voltage that the actuator monitors at all times and subsequently reacts on if outside the recommended range. See in the table below how the actuator reacts at different voltage levels.

Voltage (Present value of AV:6 / 33794	Reaction
Voltage below 14.5V (NovoCon S) or 19.0 (NovoCon M/L/XL)	Start alarm indication with LED. Initiate and alarm BV: 15 / 33536 Bit 19 and that the supply voltage is too low.
Voltage below 14.0V (NovoCon S) or 13.0 (NovoCon M/L/XL)	Motor is stopped. The LEDs indicating alarm and actuator still initiating alarm BV:15 / 33535 Bit 19 if the voltage hasn't dropped too low.
When voltage rises above 15.5V(NovoCon S) or 18.2V (NovoCon M/L/XL) again	Motor can run again. LED alarm indication stops and returns to normal operation. Alarm BV:15 / 33536 Bit 19 returns to normal operation.
When voltage rises above 43.4V	Start alarm indication with LED. Initiate an alarm BV:14 / 33536 Bit 18.
When voltage drops below 38.3V again	LED alarm indication stops and returns to normal operation. Alarm BV:14 / 33536 Bit 18 returns to normal operation.

NB: the voltage level will be constantly changing depending on the operational activity of the entire group of actuators and other devices connected. The supply voltage will go up and down in value if:
- Power supply is not strong and stable
- If long cables are used in a daisy chain setup

A higher number of actuators running at the same time will reduce the supply voltage (for the last devices on a daisy chain cable, in particular).

The actuator's voltages are considered to be OK when all values of AV:6 / 33794 are above 18V, when all actuators are moving the motor/running. To ensure voltage in each device is OK under worst case operational conditions, the following is recommended:
- Run all the actuators on the daisy chain cable at the same time. While all are running, check each value of AV:6 / 32794. These values should still be above 18V and no previously mentioned voltage level alarms should be initiated or indicated. If LEDs indicate an alarm state or a BACnet/Modbus alarm is initiated, or a value less than 18V is observed, then cabling should be reviewed.
- Check the values of AVO:0. This BACnet object holds 3 values: Average measured voltage, Maximum measured voltage and Minimum measured voltage. The most important value here is the Minimum measured voltage. It can tell you the lowest voltage that has been measured during operation of the actuator.

Firmware update

Get the most out of your NovoCon® digital actuators and keep the firmware up to date with the most recent firmware version, which can be downloaded at www.novocon.com by selecting the tab: Support files.

Warning: Calibration must be done after successful upgrade of firmware.

BACnet data

Type	Description
BACnet device profile	BACnet Application Specific Controller (B-ASC)
BACnet protocol	BACnet Master Slave / Token Passing (MS/TP)
BACnet baud rates supported	Auto baud rate detection* / 9600 bps / 19200 bps / 38400 bps / 56700 bps / 76800 bps / 115200bps

Modbus RTU data

Type	Description
Supported baud rates	Auto baud rate detection* / 9600 bps / 19200 bps / 38400 bps / 56700 bps / 76800 bps / 115200bps
Supported transmission modes	Parity: None (1-8-N-2) / Odd (1-8-O-1) / Even (1-8-E-1) / None (1-8-N-1) / Auto parity* Data format: Parity (Start bit - Data bits - Parity - Stop bits)

** Default*

© Danfoss | 2023.01

Manual operation

Mechanical and electrical operation are not allowed to be used at the same time!

The actuators can be manually positioned when in Stand-By mode or when there is no power supply (mechanically).

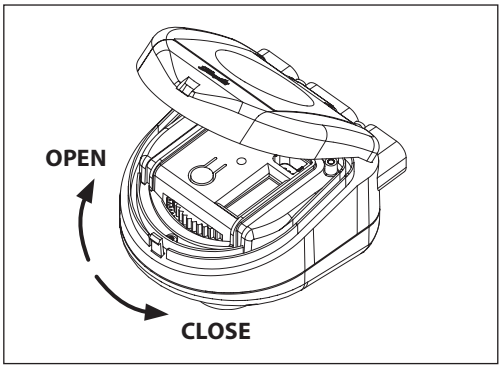

NovoCon® S

Mechanical manual operation
Manual operation is possible when NovoCon is not powered. Cover of NovoCon needs to be lifted to reach manual gear. Rotating gear to left will OPEN mounted valve and turning on right will closes it.

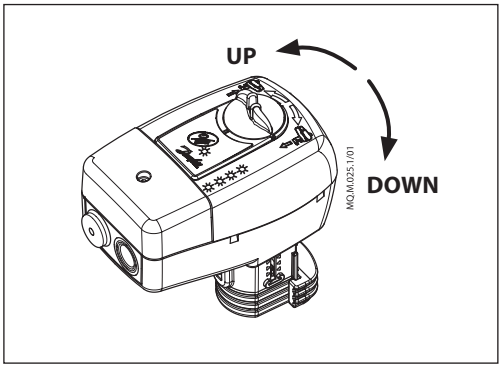

NovoCon® M

Mechanical manual operation
Manual operation is possible when NovoCon is not powered. Rotating knob to left will lift steam of valve UP and turning on right will push steam DOWN.

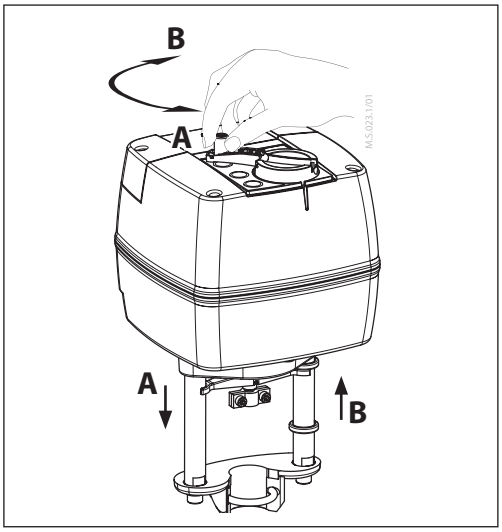

NovoCon® L, XL

Mechanical manual operation
The actuators have a knob & crank on the top of the housing which enables manual positioning of the actuator.
Use Mechanical manual operation only when the power is disconnected.

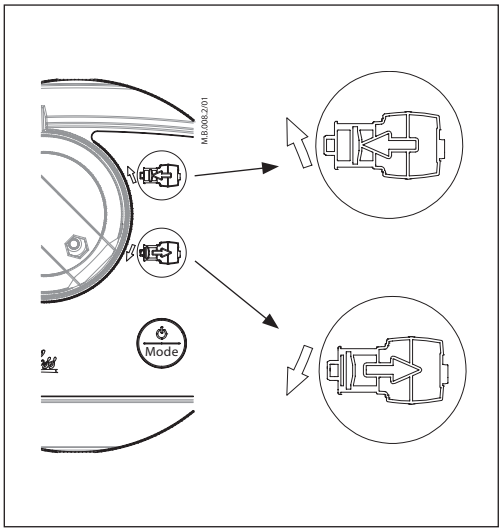

Electrical manual operation
The actuators have two buttons on the top of the housing that are used for electrical manual positioning (up or down) if the actuator is in Stand-By mode. First press the MODE button until the actuator goes to Stand-By mode (red LED is lit). By pressing the upper button the stem will be extended and by pressing the lower button the stem will be retracted.

Dimensions

NovoCon® S

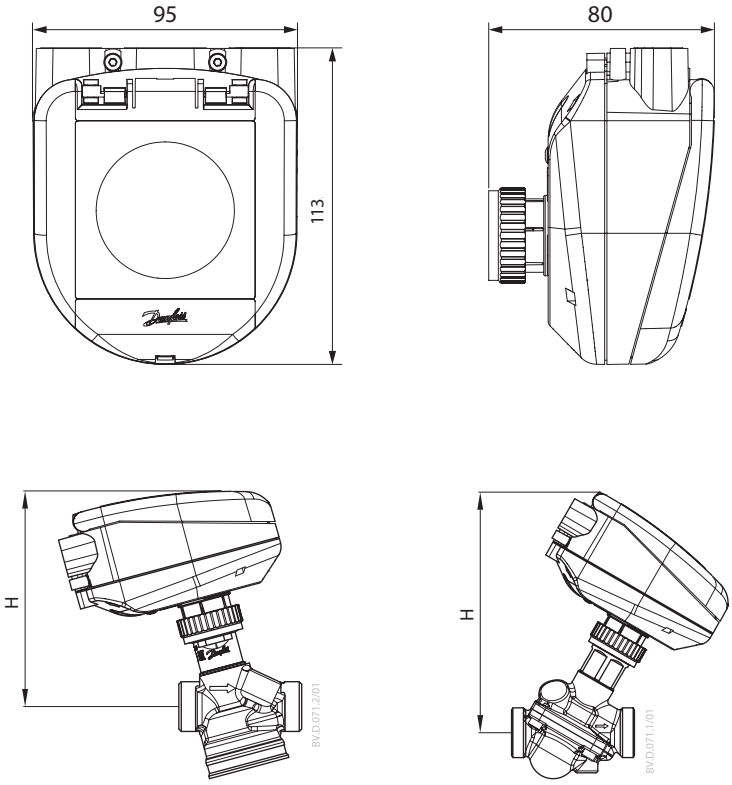

DN 15, 20 DN 25, 32

DN	NovoCon S
	H (mm)
15	130.1
20	131.3
25	153
32	164

© Danfoss | 2023.01

Dimensions *(continued)*

NovoCon® M

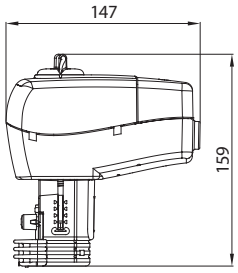

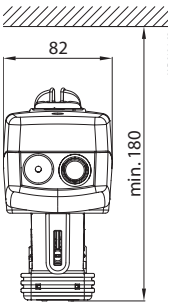

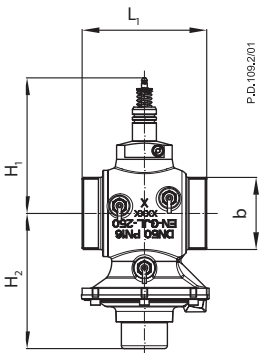

DN 40, 50

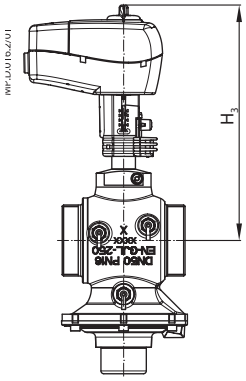

NovoCon® M + AB-QM NovoCon®

DN	L_1	H_1	H_2	H_3	b
	mm				ISO 228/1
40	110	141.5	141	247.5	G 2
50	130	141.5	141	247.5	G 2½

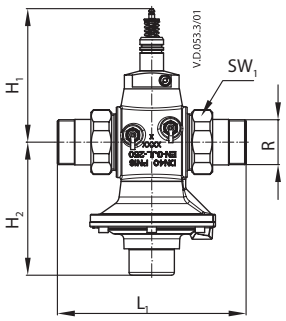

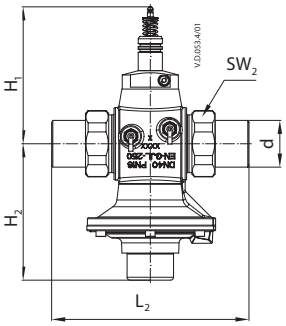

DN		40	50
R		1½	2
SW_1	mm	64	80
SW_2		70	82
d		48.3	60.3
L_1		200	244
L_2		204	234
H_1		141.5	141
H_2		141.5	141

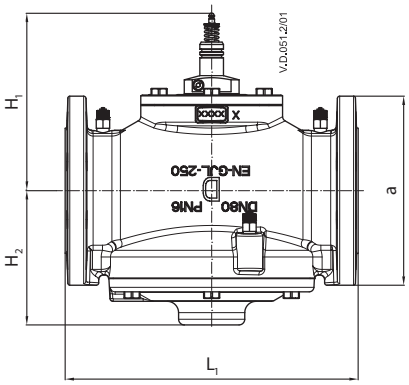

DN 50-100

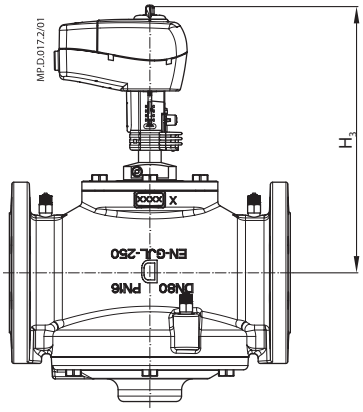

NovoCon® M + AB-QM NovoCon®

DN	L_1	H_1	H_2	H_3	a
	mm				(EN 1092-2)
50	230	141.5	141	247.5	165
65	290	187	132	293	185
80	310	190	139.5	296	200
100	350	202	152	308	220

Dimensions *(continued)*

NovoCon® L, XL

NovoCon® L

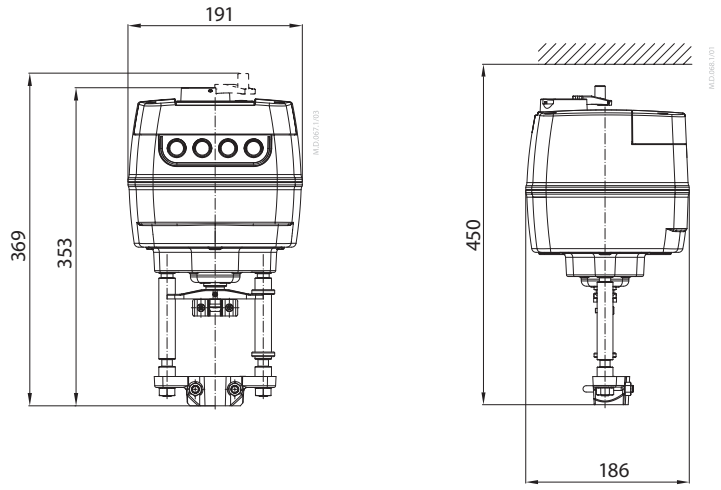

NovoCon® XL

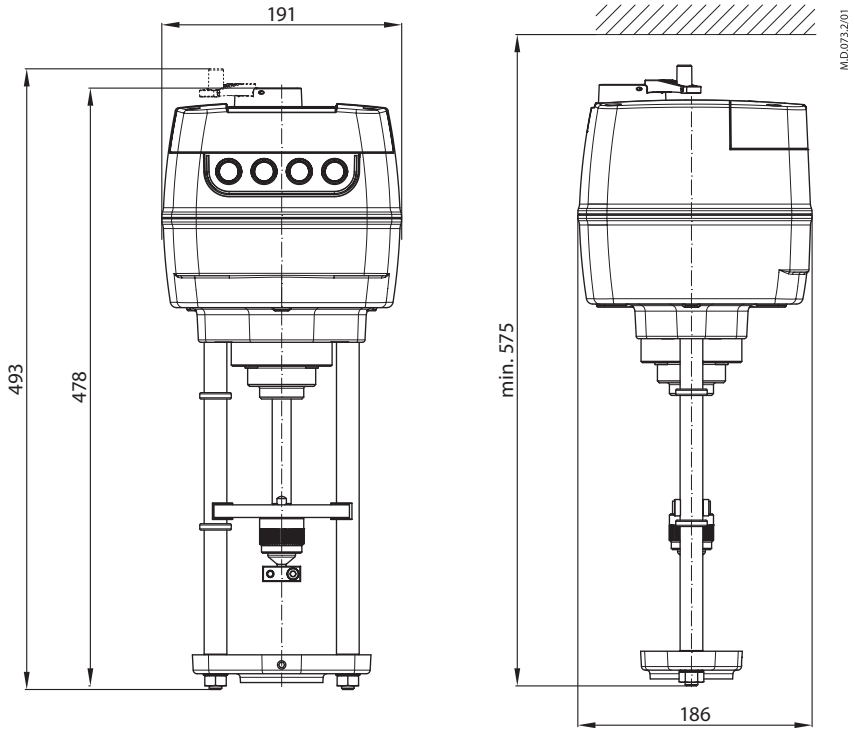

© Danfoss | 2023.01

Danfoss A/S
Climate Solutions • danfoss.com • +45 7488 2222

Any information, including, but not limited to information on selection of product, its application or use, product design, weight, dimensions, capacity or any other technical data in product manuals, catalogues descriptions, advertisements, etc. and whether made available in writing, orally, electronically, online or via download, shall be considered informative, and is only binding if and to the extent, explicit reference is made in a quotation or order confirmation. Danfoss cannot accept any responsibility for possible errors in catalogues, brochures, videos and other material.
Danfoss reserves the right to alter its products without notice. This also applies to products ordered but not delivered provided that such alterations can be made without changes to form, fit or function of the product.
All trademarks in this material are property of Danfoss A/S or Danfoss group companies. Danfoss and the Danfoss logo are trademarks of Danfoss A/S. All rights reserved.